Pressure Gauge Guide

Pressure Gauge for General Purpose

	Outside diameter	Model	Type	Indication precision ±% FS	Pressure range MPa	Connection thread	Material: Case	Material: Clear cover	Material: Stud	Indication[1] unit	Attachment[2]	
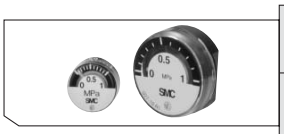	ø15	G15	Back side thread	5	0 to 1.0	R 1/8 M5 (Female thread)	Zinc die-casted (Black graphite coated)	Poly-carbonate	Zinc die-casted (Black graphite coated)	MPa	—	Page 14-11-3
	ø26	G27	Back side thread		0 to 1.0	R 1/16				MPa		
With limit indicator 	ø37.5	G36	Back side thread	3	0 to 0.2 0 to 0.4 0 to 0.7 0 to 1.0 0 to 1.5	R 1/8	Aluminum die-casted (Black disulfide molybdenum coated) Rolled steel (Black melamine painted)	Poly-carbonate	Aluminum die-casted (Black disulfide molybdenum coated) Brass	MPa	—	Page 14-11-4
		GA36	Vertical side thread									
With limit indicator 	ø42.5	G46	Back side thread	3	0 to 0.2 0 to 0.4 0 to 0.7 0 to 1.0 0 to 1.5	R 1/8 R 1/4	Aluminum die-casted (Black disulfide molybdenum coated) Rolled steel (Black melamine painted)	Poly-carbonate	Aluminum die-casted (Black disulfide molybdenum coated) Brass	MPa	Cover ring assembly	Page 14-11-6
		GA46	Vertical side thread			R 1/8 R 1/4					—	
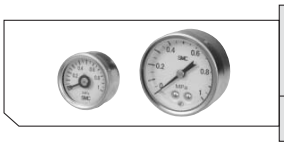	ø30	G33	Back side thread	3	0 to 0.2 0 to 0.3 0 to 0.4 0 to 0.6	R 1/8	Stainless steel	Glass	Brass	MPa	—	Page 14-11-8
		GA33	Vertical side thread									
	ø43	G43	Back side thread		0 to 0.7 0 to 1.0	R 1/8 R 1/4						

Note 1) Please consult with SMC for other scale indication units and connecting thread "NPT".
Note 2) Possible for use in panel mounting.
Note 3) Please contact SMC for the pressure range 0 to 0.6 MPa of GA33.

Oil-free/External Parts Copper-free Pressure Gauge

	Outside diameter	Model	Type	Indication precision ±% FS	Pressure range MPa	Connection thread	Material: Case	Material: Clear cover	Material: Stud	Indication[1] unit	Attachment[2]	
With limit indicator 	ø42.5	G46E	Back side thread	3	0 to 0.2 0 to 0.4 0 to 0.7 0 to 1.0 0 to 1.5	R 1/8 R 1/4	Rolled steel (Black melamine painted)	Poly-carbonate (Hard coated)	Brass (Electroless nickel plated)	MPa	Cover ring assembly	Page 14-11-10

Note 1) Please consult with SMC for other scale indication units and connecting thread "NPT".
Note 2) Possible for use in panel mounting.

Pressure Gauge for Clean Series (10-Series)

	Outside diameter	Model	Type	Indication precision ±% FS	Pressure range MPa	Connection thread	Material: Case	Material: Clear cover	Material: Stud	Indication[1] unit	Attachment	
	ø44	G49	Back side thread	3	0 to 0.4 0 to 0.7 0 to 1.0	R 1/4	Zinc die-casted (Chrome plated)	Glass	Brass (Nickel plated)	MPa	—	Page 14-11-11

Note 1) Please consult with SMC for other scale indication units and connecting thread "NPT".

Pressure Gauge for Clean Regulator

	Outside diameter	Model	Type	Indication precision ±% FS	Pressure range MPa	Connection thread	Material: Case	Material: Clear cover	Material: Stud	Indication[1] unit	Attachment	
With limit indicator 	ø42.5	G46-□-SRA, B	Back side thread	3	0 to 0.2 0 to 0.4 0 to 0.7 0 to 1.0 0 to 1.5	R 1/8 R 1/4	Stainless steel (Black melamine painted)	Poly-carbonate (Hard coated)	Stainless steel	MPa	Cover ring assembly	Page 14-11-12

Note 1) Please consult with SMC for other scale indication units and connecting thread "NPT".
Note 2) Possible for use in panel mounting.

Pressure Gauge with Switch

	Outside diameter	Model	Type	Indication precision ±% FS	Pressure range MPa	Connection thread	Material: Case	Material: Clear cover	Material: Stud	Indication[1] unit	Attachment[2]	
With limit indicator 	ø42.5	GP46	Back side thread	3	0 to 1.0	R 1/8 R 1/4	Rolled steel (Black melamine painted)	Poly-carbonate	Brass	MPa	Cover ring assembly	Page 14-11-13

Note 1) Please consult with SMC for other scale indication units and connecting thread "NPT".
Note 2) Possible for use in panel mounting.

Pressure Gauge for General Purpose

G15, G27

O.D.: ø15 ø26

G15-10-01

G27-10-R1

- Be sure to read the precautions on page 14-11-15 for selection and installation.

Standard Specifications

Model		G15	G27
Type		Back side thread	
Port size [1]		R ⅛: M5 (Female thread)	R 1/16
Fluid [2]		Air	
Indication precision		±5% F.S. (Full span)	
Material	Case (Surface treatment)	Zinc die-casted (Black graphite coated)	
	Clear cover	Polycarbonate	
	Stud (Surface treatment)	Zinc die-casted (Black graphite coated)	
	Bourdon tube	Brass	
Weight (kg)		0.01	0.015
Applicable model		ARM1000/2000	AC1000, AR1000, AW1000

• Caution on handling: When drain or oil, etc. gets into the gauge, it may result in a malfunction.

Note 1) Indicates the condition at the lower pressure limit.
Use a pipe tape for sealing. Recommended tightening torque is between 3 and 4 N·m for R 1/16 and 7 and 9 N·m for R 1/8.

Note 2) Water cannot be used as an operating fluid. Because the clearance gap of the air passage of the Bourdon tube is very small. Water will block the gap and cause a malfunction.
Similarly, when using other fluids, please consult with SMC for fluid compatibility information concerning possible corrosion and response delay, etc.

Dimensions

G15

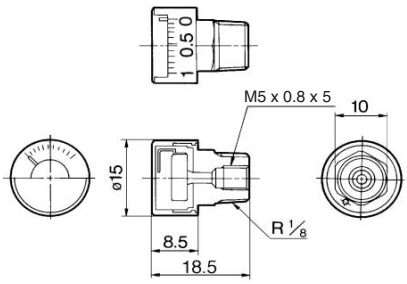

G27

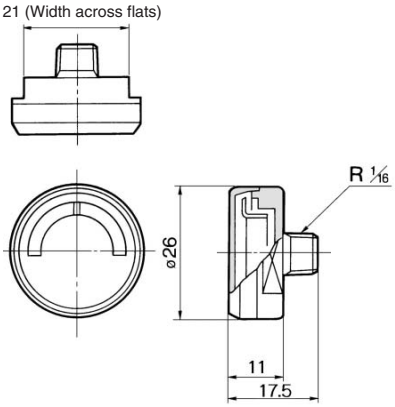

Model (Standard)

Model	Pressure range[Note)] (MPa)	Indication unit	Connection thread
G15-10-01	0 to 1.0	MPa	R 1/8, M5 (Female thread)
G27-10-R1	0 to 1.0	MPa	R 1/16

Note) Do not apply more excessive pressure than max. pressure display. It will be a cause of malfunction.

Model (Made to Order)

Other versions of this unit can be made on a made-to-order basis. Please consult with SMC for details, as delivery times may be extended.

Model	Pressure range[Note)] (MPa)	Indication unit	Connection thread
G27-10-M5-X201	0 to 1.0	MPa	M5 (Female thread)

Note) Do not apply more excessive pressure than max. pressure display. It will be a cause of malfunction.

How to Order

G 15 — 10 — 01 — X201

Pressure gauge

Size

Symbol	Outside diameter
15	ø15
27	ø26

Max. display pressure

Symbol	Unit: MPa
10	0.1

Pressure other than 1.0 MPa is not available.

Connection thread

Symbol	Size
01	R1/8: M5 (Female thread)
R1	R 1/16

Option

Symbol	Specifications
Nil	—
X201	M5 (Female thread) only

Note 1) X3 (Wetted parts SUS) specifications are not available.

Note 2) Part number for pressure gauge with MPa·psi units is G27-P∗∗-∗∗-X30. This will no longer be sold for use in Japan after the new Weight and Measure Act has been implemented (October, 1999). G15 type is not available.

Pressure Gauge for General Purpose /With limit indicator

G36, GA36

O.D.: ø37

G36-10-01

- Be sure to read the precautions on page 14-11-15 for selection and installation.

Standard Specifications

Model		G36	GA36
Type		Back side thread	Vertical side thread
Port size (1)		R 1/8 (Option M: With M5 female thread)	
Fluid (2)		Air	
Indication precision		±3% F.S. (Full span)	
Material	Case (Surface treatment)	Aluminum die-casted (Black disulfide molybdenum coat treated)	Rolled steel (Black melamine painted)
	Clear cover	Polycarbonate (Part no.: G36-00-00-3)	
	Stud (Surface treatment)	Aluminum die-casted (Black disulfide molybdenum coat treated)	Brass
	Bourdon tube	Brass	
Weight (kg)		0.04	0.05
Applicable model		AC2000/2500/3000 AR2000/2500/3000 AW2000/3000	—

Note 1) When installing a pressure gauge, be careful not to fasten too tight. Excessive tightening will result in damage. Use a pipe tape for sealing. Recommended tightening torque is R 1/8: Set between 7 and 9 N·m.

Note 2) Not applicable to water as fluid because its stub is made from aluminum die-casted. Water may cause corrosion and block the air passage. Use a pressure gauge with wetted parts made from stainless steel, G46-□-X3. (Note: Take care when using G36-□-01M, whose wetted part is made from brass. Some corrosion may result.) Design system to not be affected by water hammer when using water as fluid. Similarly, when using other fluids, please consult with SMC, to prevent corrosion-related problems.

Model (Standard)

Model	Pressure range Note) MPa	Indication unit	Connection thread	Note
G36-2-01	0 to 0.2	MPa	R 1/8	—
G36-4-01	0 to 0.4			
G36-7-01	0 to 0.7			
G36-10-01	0 to 1.0			
GA36-10-01	0 to 1.0			

Note) Do not apply pressure more than the maximum display pressure. This will cause a malfunction.

Model (Made to Order)

Other versions of this unit can be made on a made-to-order basis. Please consult with SMC for details, as delivery times may be extended.

Model	Pressure range Note) MPa	Indication unit	Connection thread	Note
G36-10-01-X2	0 to 1.0	MPa	R 1/8	Plated stem (Ni)
G36-15-01	0 to 1.5			—

Note) Do not apply pressure more than the maximum display pressure. This will cause a malfunction.

How to Order

G □ 36 — 10 — 01 M — X2

Pressure gauge

Size

Symbol	Outside diameter
36	ø37.5

Type

Symbol	Type
Nil	Back side thread
A	Vertical side thread

Connection thread

Symbol	Size
01	R1/8

Max. display pressure

Symbol	Unit: MPa
2	0.2
4	0.4
7	0.7
10	1.0
15	1.5

Option

Symbol	Specifications
Nil	–
X2	Nickel plated
X4	Oil-free (Wetted parts degrease washing)

Note 1) X3 (wetted parts SUS) specifications is not available.

Note 2) Cover ring assembly is not available.

Note 3) Part number for pressure guage with MPa·psi units is G□36-P**-**-X30. This will no longer be sold for use in Japan after the new Weight and Measure Act has been implemented (October, 1999).

Option

Symbol	Specifications
Nil	—
M	M5 (Female thread)

Note) Use M5 female thread when piping onto a panel.

Dimensions

G36

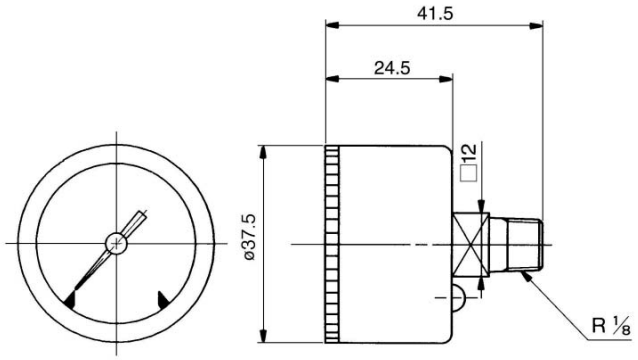

GA36

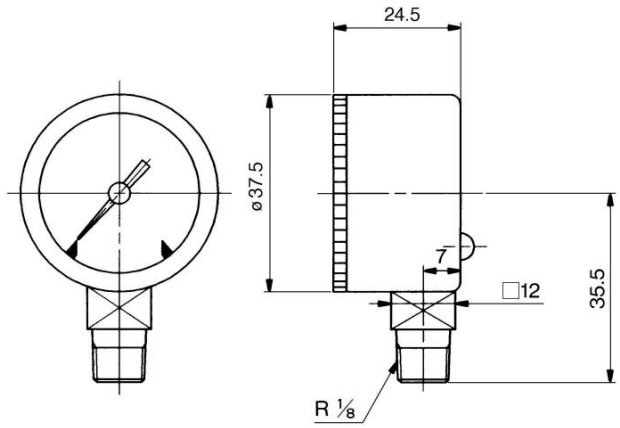

Pressure Gauge for General Purpose/With limit indicator

G46, GA46

O.D.: ø42

G46-10-02M-C

- Be sure to read the precautions on page 14-11-15 for selection and installation.

Standard Specifications

Model		G46	GA46
Type		Back side thread	Vertical side thread
Port size(1)		R 1/8, R 1/4 (Option M: with M5 female thread)	
Fluid (2)		Air	
Indication precision		±3% F.S. (Full span)	
Material	Case (Surface treatment)	Aluminum die-casted (Black disulfide molybdenum coated)	Rolled steel (Black melamine painted)
	Clear cover	Polycarbonate (Part no.: G46-00-00-3)	
	Stud (Surface treatment)	Aluminum die-casted (Black disulfide molybdenum coated)	Brass
	Bourdon tube	Brass	
Weight (kg)		0.05	0.075
Applicable model		AC4000/5000/5500/6000 AR4000/5000/6000 AW4000	—
Attachment: With cover ring assembly	C	Part no.: 1305104-1A	—
	C1	Part no.: 1305104-3A	

Note 1) Indicates the condition at the lower pressure limit. Use a pipe tape for sealing. Recommended tightening torque: R 1/8: Set between 7 and 9 N·m, R 1/4: 12 and 14 N·m respectively.

Note 2) Not applicable to water as fluid because its stub is made from aluminum die-casting. Water may cause corrosion and block the air passage. Use G46-□-X3 pressure gauge with wetted parts SUS (wetted parts of G46-□-01M are made of brass and this become lightly corroded. Take precautions when using.) Design system to not be affected by water hammer when using water as fluid. Similarly, when using other fluids, please consult SMC for fluid compatibility information concerning corrosive potential.

Model (Standard)

Model	Pressure range(Note) MPa	Indication unit	Connection thread	Note
G46-2-01/ 02	0 to 0.2	MPa	R 1/8, 1/4	—
G46-4-01/ 02	0 to 0.4			
G46-7-01/ 02	0 to 0.7			
G46-10-01/ 02	0 to 1.0			
G46-2-01 to 02M	0 to 0.2		R 1/8, 1/4 M5 (Female thread)	
G46-4-01 to 02M	0 to 0.4			
G46-7-01 to 02M	0 to 0.7			
G46-10-01 to 02M	0 to 1.0			
GA46-10-01 to 02	0 to 1.0		R 1/8, 1/4	

Note) Do not apply pressure more than the maximum display pressure. This will cause a malfunction.

Model (Made to Order)

Other versions of this unit can be made on a made-to-order basis. Please consult with SMC for details, as delivery times may be extended.

Model	Pressure range(Note) MPa	psi	Indication unit	Connection thread	Note
G46-2-01 to 02-C/ C1	0 to 0.2	—	MPa	R 1/8, 1/4	With cover ring assembly
G46-4-01 to 02-C/ C1	0 to 0.4	—			
G46-7-01 to 02-C/ C1	0 to 0.7	—			
G46-10-01 to 02-C/ C1	0 to 1.0				
G46-2-01 to 02M-C/ C1	0 to 0.2	—		R 1/8, 1/4 M5 (Female thread)	
G46-4-01 to 02M-C/ C1	0 to 0.4	—			
G46-7-01 to 02M-C/ C1	0 to 0.7	—			
G46-10-01 to 02M-C/ C1	0 to 1.0	—			
G46-4-02-X30	0 to 0.4	0 to 60	MPa, psi	R 1/4	—
G46-10-02-X30	0 to 1.0	0 to 150			
G46-2-02M-X4	0 to 0.2	—	MPa	R 1/4 M5 (Female thread)	Oil-free
G46-4-02M-X4	0 to 0.4	—			
G46-7-02M-X4	0 to 0.7	—			
G46-10-02M-X4	0 to 1.0	—			
G46-2-02M-C/ C1-X4	0 to 0.2	—			Oil-free, With cover ring assembly
G46-4-02M-C/ C1-X4	0 to 0.4	—			
G46-7-02M-C/ C1-X4	0 to 0.7	—			
G46-10-02M-C/ C1-X4	0 to 1.0	—			
G46-10-02-X2	0 to 1.0	—		R 1/4	Plated stem (Ni)
G46-15-01 to 02	0 to 1.5	—			—

Note) Do not apply pressure more than the maximum display pressure. This will cause a malfunction.

How to Order

G □ 46 — 10 — 01 M — C — X2

- **Pressure gauge**
- **Type**

Symbol	Type
Nil	Back side thread
A	Vertical side thread

- **Size**

Symbol	Outside diameter
46	ø42.5

- **Max. display pressure**

Symbol	Unit: MPa
2	0.2
4	0.4
7	0.7
10	1.0
15	1.5

- **Connection thread**

Symbol	Size
01	R 1/8
02	R 1/4

- **Option**

Symbol	Specifications
Nil	–
M	With M5 (Female thread)

Note: Use M5 female thread when piping onto a panel.

- **Attachment (Cover ring assembly)**

Symbol	Specifications
Nil	Without cover ring assembly
C	Clear cover has no protrusion. (Clear cover is irremovable.)
C1	Clear cover has protrusion. (Clear cover is removable.)

- **Option**

Symbol	Specifications
Nil	—
X2	Stud parts Nickel plated
X3	Wetted parts stainless steel (1)
X4	Oil-free (Wetted parts degrease washing)

Note 1) Movable parts (gear, etc) inside pressure gauge are made of brass.

Note 2) Part number for pressure gauge with MPa·psi units is G□46-P**-**-X30. This will no longer be sold for use in Japan after the new Weight and Measure Act has been implemented (October, 1999).

Dimensions

The dimensions in ( ): Connecting thread R 1/4

G46

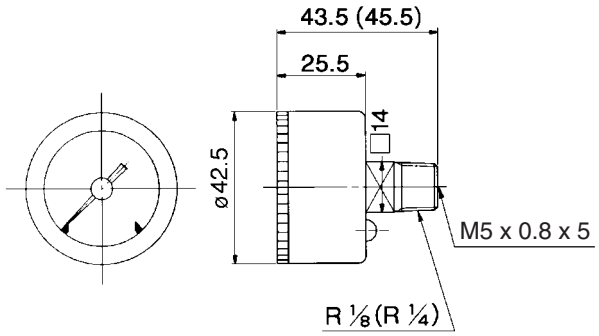

GA46

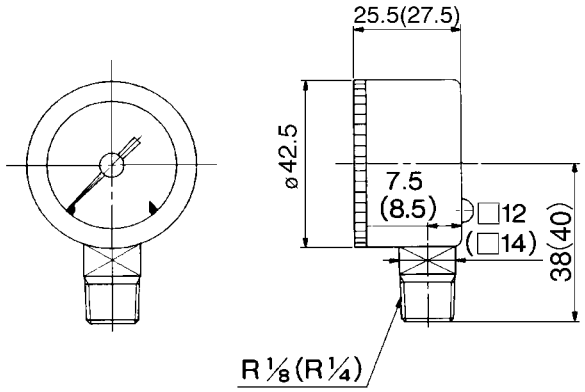

G46: With cover ring assembly (For panel mount)

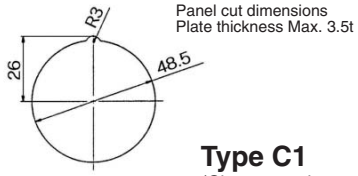

Type C
(Clear cover is not removable.)

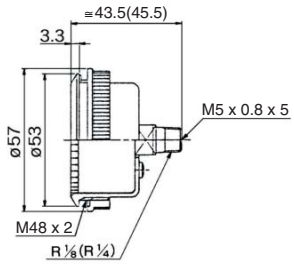

Type C1
(Clear cover is removable.)

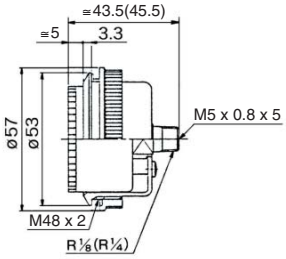

For setting method, Refer to page 14-11-15 .

Pressure Gauge for General Purpose

G33, GA33

O.D.: ø30

Standard Specifications

Model		G33	GA33
Type		Back side thread	Vertical side thread
Port size (1)		R 1/8	
Fluid (2)		Air	
Indication precision		±3% F.S. (Full span)	
Material	Case	Stainless steel	
	Clear cover	Glass	
	Stud	Brass	
	Bourdon tube	Brass	
Applicable model		IP5000, IP6000, IR1000, IT1000, ARM2500/3000	

Note 1) When mounting a pressure gauge, use caution not to tighten excessively. Excessive tightening will cause product to be damaged. Use a pipe tape for sealing. Recommended tightening torque: R 1/8: Set between 7 and 9 N·m.

Note 2) When using other fluids, please consult with SMC for fluid compatibility information concerning corrosive potential.

Dimensions

G33

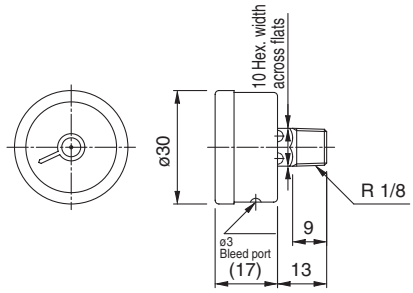

G33-□□-01

GA33

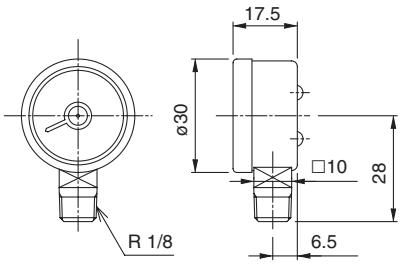

GA33-□□-01

Model (Standard)

Model	Pressure range Note) MPa	Indication unit	Connection thread	Note
G33-2-01	0 to 0.2	MPa	R 1/8	—
G33-3-01	0 to 0.3			
G33-4-01	0 to 0.4			
G33-6-01	0 to 0.6			
G33-10-01	0 to 1.0			
GA33-2-01	0 to 0.2			
GA33-4-01	0 to 0.4			
GA33-7-01	0 to 0.7			
GA33-10-01	0 to 1.0			

Note) Do not apply pressure more than the maximum display pressure. This will cause a malfunction.

Model (Made to Order)

Model	Pressure range Note) MPa	Indication unit	Connection thread	Note
G33-2-01-X2	0 to 0.2	MPa	R 1/8	X2: Stud parts electroless nickel plated
G33-3-01-X2	0 to 0.3			
G33-4-01-X2	0 to 0.4			
G33-6-01-X2	0 to 0.6			
G33-10-01-X2	0 to 1.0			
GA33-2-01-X2	0 to 0.2			X2: Stud parts nickel plated
GA33-4-01-X2	0 to 0.4			
GA33-7-01-X2	0 to 0.7			
GA33-10-01-X2	0 to 1.0			
G33-10-01-X4	0 to 1.0			X4: Oil-free (Wetted parts degreasing)

Note) Do not apply pressure more than the maximum display pressure. This will cause a malfunction.

How to Order

G □ 33 — □ — 01 — □

Pressure gauge

Frame type

Symbol	Type
Nil	Back side thread
A	Vertical side thread

Model

Symbol	Outside diameter
33	ø30

Max. display pressure

Symbol	Unit: MPa
2	0.2
3	0.3
4	0.4
6	0.6
7	0.7
10	1.0

Connection thread

Symbol	Size
01	R 1/8

Option

Symbol	Specifications
Nil	—
X2	Stud parts electroless nickel plated
X4	Oil-free (Wetted parts degrease washing)

Note 1) X3 (Wetted parts stainless steel) specifications is not available.

Note 2) Please contact SMC separately for pressure range of GA33 between 0 and 0.6 MPa.

Pressure Gauge for General Purpose

G43

O.D.: ø43

G43-10-01

Standard Specifications

Model		G43
Type		Back side thread
Port size [1]		R ⅛, R ¼
Fluid [2]		Air
Indication precision		±3% F.S. (Full span)
Material	Case	Stainless steel
	Clear cover	Glass
	Stud	Brass
	Bourdon tube	Brass
Applicable model		IP200/600, IT600, IR2000/3000, IT2000/4000

Note 1) When mounting a pressure gauge, use caution not to tighten excessively. Excessive tightening will cause product to be damaged.Use a pipe tape for sealing. Recommended tightening torque: R 1/8: Set between 7 and 9 N·m, R 1/4: 12 and 14 N·m respectively.
Note 2) When using with water, use G43-□-X3 (wetted parts stainless steel) and use caution not to apply water hammer. When using the other fluids, please consult with SMC for fluid compatibility information concerning corrosive potential.

External Dimensions
(Except made-to-order products)

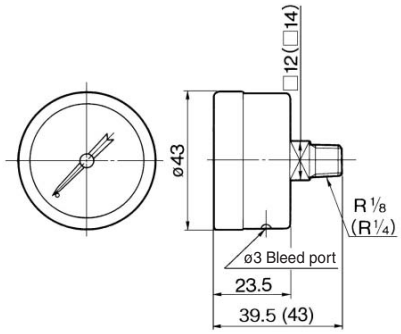

The dimensions in ( ): Connecting thread R ¼

Model (Standard)

Model	Pressure range[Note)] MPa	Indication unit	Connection thread	Note
G43-2-01 to 02	0 to 0.2	MPa	R ⅛, R ¼	—
G43-4-01 to 02	0 to 0.4			
G43-6-01	0 to 0.6		R ⅛	
G43-7-01 to 02	0 to 0.7		R ⅛, R ¼	
G43-10-01 to 02	0 to 1.0			

Note) Do not apply pressure more than the maximum display pressure. This will cause a malfunction.

Model (Made to Order)

Model	Pressure range[Note)] MPa	Indication unit	Connection thread	Note
G43-2-01 to 02-X2	0 to 0.2	MPa	R ⅛, R ¼	X2: Stud parts nickle plated
G43-4-01 to 02-X2	0 to 0.4			
G43-6-01-X2	0 to 0.6		R ⅛	
G43-7-01 to 02-X2	0 to 0.7		R ⅛, R ¼	
G43-10-01 to 02-X2	0 to 1.0			
G43-2-01 to 02-X3	0 to 0.2		R ⅛, R ¼	X3: Wetted parts stainless steel
G43-4-01 to 02-X3	0 to 0.4			
G43-6-01-X3	0 to 0.6		R ⅛	
G43-7-01 to 02-X3	0 to 0.7		R ⅛, R ¼	
G43-10-01 to 02-X3	0 to 1.0			
G43-2-01 to 02-X4	0 to 0.2		R ⅛, R ¼	X4: Oil-free (Wetted parts degreasing)
G43-4-01 to 02-X4	0 to 0.4			
G43-6-01-X4	0 to 0.6		R ⅛	
G43-7-01 to 02-X4	0 to 0.7		R ⅛, R ¼	
G43-10-01 to 02-X4	0 to 1.0			

Note) Do not apply pressure more than the maximum display pressure. This will cause a malfunction.

How to Order

G 43 — □ — 01 — □

- **G**: Pressure gauge
- **43**: Model
- **□**: Max. display pressure
- **01**: Connection thread size
- **□**: Option

Model

Symbol	Outside diameter
43	ø43

Max. display pressure

Symbol	Unit: MPa
2	0.2
3	0.3
4	0.4
6	0.6
7	0.7
10	1.0

Connection thread size

Symbol	Size
01	R ⅛
02	R ¼

Option

Symbol	Specifications
Nil	—
X2	Stud parts nickel plated
X3	Wetted parts stainless steel
X4	Oil-free (Wetted parts degrease washing)

Oil-free/External Parts Copper-free Pressure Gauge/ With Limit Indicator

G46E

O.D.: ø42

G46E-10-02M

G46E-10-02M-C

- Be sure to read the precautions on page 14-11-15 for selection and installation.

Dimensions

Dimensions in: R 1/4 connecting thread

G46E

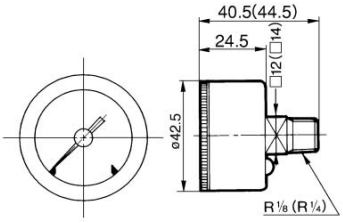

G46E (Type DT): With cover ring assembly (For panel mounting)

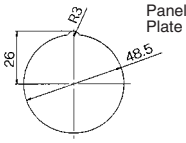

Panel cut dimensions
Plate thickness Max. 3.5t

Type C

(Clear cover is not removable.)

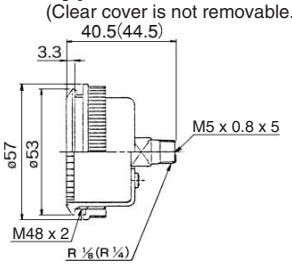

Type C1

(Clear cover is removable.)

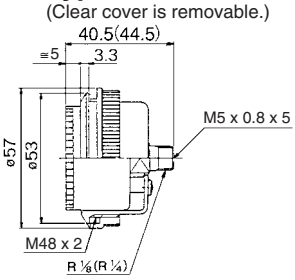

For mounting method, refer to page 14-11-15.

Standard Specifications

Model		G46E
Type		Back side thread
Port size [1]		R1/8 , R1/4 (Option M: with M5 female thread)
Fluid [2]		Air
Indication precision		±3% F.S. (Full span)
Fluid contact part cleaning		Wetted parts degrease washing
Material	Case (Surface treatment)	Rolled steel (Black melamine painted)
	Clear cover (Surface treatment)	Polycarbonate (Hard coated) Part no.: G46-00-00-2
	Stud (Surface treatment)	Brass (Electroless nickel plated)
	Bourdon tube	Brass [3]
Weight (kg)		0.08
Attachment: With cover ring assembly	C	Part no.: 1305104-1A
	C1	Part no.: 1305104-3A

Note 1) When mounting a pressure gauge, use caution not to tighten excessively. Excessive tightening will cause product failure. Use a pipe tape for sealing. Recommended tightening torque: R1/8: Set between 7 and 9 N·m, R1/4: 12 and 14 N·m respectively.
Note 2) When fluid is water, use G46-□-X3. Wetted parts are made of stainless steel construction. (Some corrosion may be caused by water because this product's wetted parts are made of brass.) Design system to not be affected by water hammer when using water as fluid. Similarly, when using other fluids, please consult with SMC for fluid compatibility information concerning corrosive potential.
Note 3) Bourdon tube and internal movable parts (gear, etc.) are made of brass and are not electrolessly nickel plated. This is not an internally copper-free product.

Model (Standard)

Model	Pressure range[Note] MPa	Indication unit	Connection thread	Note
G46E-2-01 to 02M	0 to 0.2	MPa	R 1/8 R 1/4 M5 (Female thread)	—
G46E-4-01 to 02M	0 to 0.4			
G46E-7-01 to 02M	0 to 0.7			
G46E-10-01 to 02M	0 to 1.0			

Note) Do not apply pressure more than the maximum display pressure. This will cause a malfunction.

Model (Made to Order)

Other versions of this unit can be made on a made-to-order basis. Please consult SMC for details, as delivery times may be extended.

Model	Pressure range[Note] MPa	Indication unit	Connection thread	Note
G46E-2-01 to 02M-C/ C1	0 to 0.2	MPa	R 1/8 R 1/4 M5 (Female thread)	With cover ring assembly
G46E-4-01 to 02M-C/ C1	0 to 0.4			
G46E-7-01 to 02M-C/ C1	0 to 0.7			
G46E-10-01 to 02M-C/ C1	0 to 1.0			

Note) Do not apply pressure more than the maximum display pressure. This will cause a malfunction.

How to Order

G 46 E — 10 — 01 M — C

Pressure gauge

Size

Symbol	Outside diameter
46	ø42.5

Specifications

Symbol	Specifications
E	Oil-free, external parts copper-free

Max. display pressure

Symbol	Unit: MPa
2	0.2
4	0.4
7	0.7
10	1.0
15	1.5

Connection thread

Symbol	Size
01	R1/8
02	R1/4

Option

Symbol	Specifications
Nil	—
M	With M5 (Female thread)

Note) Use M5 female thread when piping onto a panel.

Attachment (Cover ring assembly)

Symbol	Specifications
Nil	Without cover ring assembly
C	Clear cover has no protrusion. (Clear cover is irremovable.)
C1	Clear cover has protrusion. (Clear cover is removable.)

Pressure Gauge for Clean Series (10-series)

G49

O.D: ø44

- Be sure to read the precautions on page 14-11-15 for selection and installation.

Standard Specifications

Installation of a filter on the breathing hole (filtration 3 μm) enables an unit to curb particle generation from the pressure gauge inside.

Model		G49
Type		Back side thread
Port size[1]		R 1/4
Fluid [2]		Air
Indication precision		±3% F.S. (Full span)
Material	Case (Surface treatment)	Zinc die-casted (Chromate plated)
	Clear cover	Glass
	Stud (Surface treatment)	Brass (Nickle plated for external parts only)
	Bourdon tube	Brass [3]
Weight (kg)		0.095

Note 1) When mounting a pressure gauge, use caution not to tighten excessively. Excessive tightening will cause product failure. Use a pipe tape for sealing. Recommended tightening torque: Set between 12 and 14 N·m.
Note 2) When fluid is water, use G46-□-X3. Wetted parts of G46-□-X3 are made of Stainless steel. Use caution as some corrosion may be caused by water. Standard G49 pressure gauge conact area is made of brass. When using water, use caution not to apply water hammer. Similarly, when using other fluids, consult SMC for fluid compatibility information concerning corrosive potential.
Note 3) Bourdon tube and internal movable parts (gear, etc.) are made of brass, and are not nickel plated.

Dimensions

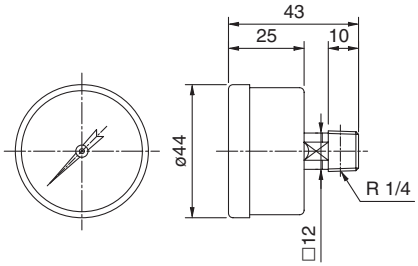

Model (Standard)

Model	Pressure range Note) MPa	Indication unit	Connection thread	Note
G49-4-02	0 to 0.4	MPa	R 1/4	—
G49-7-02	0 to 0.7			
G49-10-02	0 to 1.0			

Note) Do not apply pressure more than the maximum display pressure. This will cause a malfunction.

How to Order

G 49 — 10 — 02 — X3

Pressure gauge

Size

Symbol	Outside diameter
49	ø44

Max. display pressure

Symbol	Unit: MPa
4	0.4
7	0.7
10	1.0

Connection thread

Symbol	Size
02	R1/4

Option

Symbol	Specifications
Nil	—
X3	Wetted parts stainless steel[2]

Note 1) Cover ring assembly is not available.
Note 2) Movable parts (gear, etc) inside pressure gauge are made of brass.
Note 3) Part number for pressure gauge with MPa·psi units is G49-P**-**-X30. This will no longer be sold for use in Japan after the new Weight and Measure Act has been implemented (October, 1999).

Pressure Gauge for Clean Regulator/With Limit Indicator

G46–■–■–SRA, B

O.D.: ø42

G46-10-02-SR A, B

- Be sure to read the precautions on page 14-11-15 for selection and installation.

Dimensions

Dimensions in ( ): R 1/4 connectingthread

G46-□-□- SRA, B

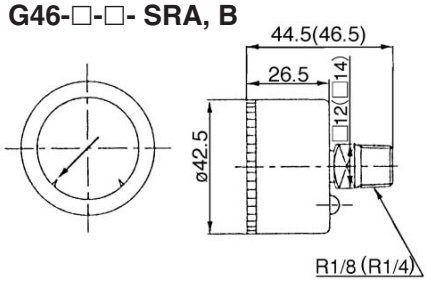

G46-□-□- SRB: With cover ring assembly (For panel mount)

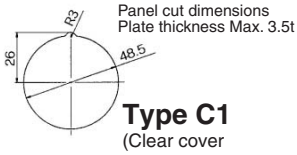

Panel cut dimensions
Plate thickness Max. 3.5t

Type C
(Clear cover is not removable.)

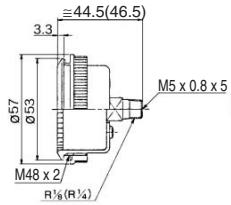

Type C1
(Clear cover is removable.)

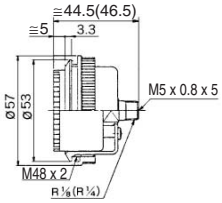

Standard Specifications

Model		G46-□-SRA	G46-□-SRB
Type		Back side thread	
Port size [1]		R ⅛, R ¼	
Fluid [2]		Air	
Indication precision		±3% F.S. (Full span)	
Fluid contact part cleaning (Wetted part)		Precision cleaning	General degreasing
Assembly/environment		Clean room M5.5 (Class 10000)	General production line
Oil/Water free		Oil/Water-free[3]	
Material [4]	Case	Stainless steel 304 (Black melamine painted)	
	Clear cover (Surface treatment)	Polycarbonate (Hard coated) Part no.: G46-00-00-2	
	Stud	Stainless steel 316	
	Bourdon tube	Stainless steel 316	
Attachment: cover ring assembly	C	Part no.: 1305104-6A	
	C1	Part no.: 1305104-7A	
Packaging		• Polyethylene cap for stud parts. • Airtight polyethylene bag	• Polyethylene cap for stud parts. • Polyethylene bag
Weight (kg)		0.085	

Note 1) When mounting a pressure gauge, use caution not to tighten excessively. Excessive tightening will cause product failure. Use a pipe tape for sealing. Recommended tightening torque: R ⅛ : Set between 7 and 9 N·m, R ¼ : 12 and 14 N·m respectively.
Note 2) When using water, use caution not to apply water hammer. When using other fluids, please consult with SMC for compatibility information concerning corrosion potential.
Note 3) When manufacturing pressure gauge, SMC uses caution not to allow water to remain in the wetted parts.
Note 4) Movable parts (gear, etc) inside pressure gauge are made of brass.

Model (Standard)

Made-to-order products, (not including models above) may take longer leadtime. Please consult with SMC beforehand.

Model	Pressure range[Note] MPa	Indication unit	Connection thread	Note
G46-2-01 to 02-SRA	0 to 0.2	MPa	R ⅛ R ¼	—
G46-2-01 to 02-SRB				
G46-4-01 to 02-SRA	0 to 0.4			
G46-4-01 to 02-SRB				
G46-7-02-SRA	0 to 0.7			
G46-7-02-SRB				
G46-10-02-SRA	0 to 1.0			
G46-10-02-SRB				

Note) Do not apply pressure more than the maximum display pressure. This will cause a malfunction.

How to Order

G 46 — 10 — 01 M — SRA — C

Pressure gauge

Size

Symbol	Outside diameter
46	ø42.5

∗ Part number for pressure gauge with MPa·psi units is G46-P∗∗-∗∗-X30. This will no longer be sold for use in Japan after the new Weight and Measure Act has been implemented (October, 1999).

Max. display pressure

Symbol	Unit: MPa
2	0.2
4	0.4
7	0.7
10	1.0

Connection thread

Symbol	Size
01	R⅛
02	R¼

Option

Symbol	Specifications
Nil	—
M	With M5 (Female thread)

Note) Use M5 female thread when panel-mounting for piping.

Grade

Symbol	Component parts polishing, Assembly environment
SRA	Component parts: Precision cleaning Assembly: Clean room M5.5 (Class 10000)
SRB	Component parts: General degreasing Assembly: General production line

Attachment (Cover ring assembly)

Symbol	Specifications
Nil	Without cover ring assembly
C	Clear cover has no protrusion. (Clear cover is irremovable.)
C1	Clear cover has protrusion. (Clear cover is removable.)

Pressure Gauge with Switch

GP46

O.D.: ø42

- **A pressure switch function has been added to the gauge.**
- **The pressure switch is equipped with a light for verifying operation.**
- **The pressure gauge is equipped with a limit indicator.**
- **To be used for verifying the supply pressure.**

Circuit Example

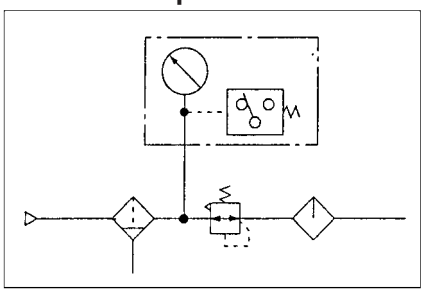

• Be sure to read the precautions in page 14-11-15 for selection and installation.

Standard Specifications

Model			GP46
Gauge	Type		Back side thread
	Ambient and fluid temperature		–5 to 60°C (No freezing)
	Indicated pressure range		0 to 1.0 MPa
	Port size (1)		R 1/8, 1/4 (Option M: with M5 female thread)
	Fluid (2)		Air
	Indication precision		±0.03 MPa
Pressure switch	Setting range (3)(4)		1 to 0.8 MPa
	Hysteresis		0.07 MPa
	Pointer error (5)		±0.05 MPa (5 to 40°C) ±0.08 MPa (–5 to 60°C) No freezing
	Contact		With light: 1a (Normally open) Without light: 1ab (Normally open/ Normally closed)
	Wiring		Lead wire (Length: 300 mm)
	Indicator light	AC	Neon light
		DC	Light emitting diode (LED)
Attachment: With cover ring assembly		C	Part no.: 1305104-4A
Weight (kg)			0.12

Note 1) Indicates the condition at the lower pressure limit. Use a pipe tape for sealing. Recommended tightening torque: R 1/8: Set between 7 and 9 N·m, R 1/4: 12 and 14 N·m respectively.
Note 2) Water is not an acceptable fluid. When using the other fluids, please consult with SMC for compatibility information concerning corrosion.
Note 3) Set value of pressure switch is indicated by pointer (green). It is the point where the circuit between N.O. (white) and COM (black) is turned off during pressure decrease. To set the value, turn needle in clockwise position to the correct value. When setting; if desired set position has been passed, turn needle in a counterclockwise direction back again beyond the desired value and then once again return needle in a clockwise direction stopping at the desired value. Value must be set while needle is traveling in a clockwise direction.
Note 4) Make sure to provide a minimum difference of 0.1 MPa between the set pressure and the operating pressure (including the pressure drop). If the difference is smaller, it could lead to improper operation. Refer to page 14-11-15 for details on how to set the setting needle. Use caution: Operating pressure should be the sum of the pressure of the setting needle error (±0.05 MPa), the hysteresis (0.07 MPa), and the display accuracy (±0.05 MPa) on the set pressure value, or the circuit between N.O. (white) and COM (black) may not turn ON while pressure is increasing.
Note 5) Maximum error value: Add the pressure gauge indicator error of 0.03 MPa to the setting needle error.

Model (Standard)

Other versions of this unit can be made on a made-to-order basis. Please consult with SMC for details, as delivery times may be extended.

Model	Pressure range(1) MPa	Indication unit	Connection thread	Note
GP46-10-01 to 02	0 to 1.0	MPa	R 1/8 R 1/4	—
GP46-10-01 to 02L2				
GP46-10-01 to 02L5				

Note 1) Do not apply pressure more than the maximum display pressure. This will cause a malfunction.

Micro-switch Rated Voltage

Load	Load resistant		
Rated voltage	30 VDC	125 VAC	250 VAC
Operating current range	0.01 to 0.5 A	0.01 to 0.3 A	0.01 to 0.2 A

How to Order

GP46—10—01 M L2—C—X201

Pressure gauge with switch

Size

Symbol	Outside diameter
46	ø42.5

Max. display pressure

Symbol	Unit: MPa
10	1.0

Connection thread

Symbol	Size
01	R1/8
02	R1/4

Option

Symbol	Specifications
Nil	—
M	With M5 (Female thread)

Indicator light

Nil	Without indicator light
L2	Neon light (100 VAC/220 VAC)
L5	LED/24 VDC

Attachment (Cover ring assembly)

Symbol	Specifications
Nil	Without cover ring assembly
C	Clear cover has no protrusion. (Clear cover is irremovable.)

Note) Option C1 (Clear cover has protrusion. / Clear cover is removable.) is not compliant.

Option

Symbol	Specifications
Nil	—
X201	Lead wire length 3 m

Note 1) X3 (Wetted parts stainless steel) specification is not available.
Note 2) Part number for pressure gauge with MPa·psi units is G46-P**-**-X30. This will no longer be sold for use in Japan after the new Weight and Measure Act has been implemented (October, 1999).

Circuit Diagram

Without indicator light

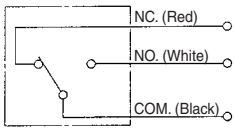

With indicator light

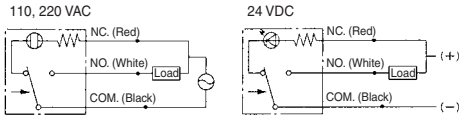

The arrow in the diagram indicates the direction of the pressure increase. The light turns OFF when the pressure becomes higher than the set pressure and turns ON when the pressure becomes lower than the set pressure.

Dimensions

GP46

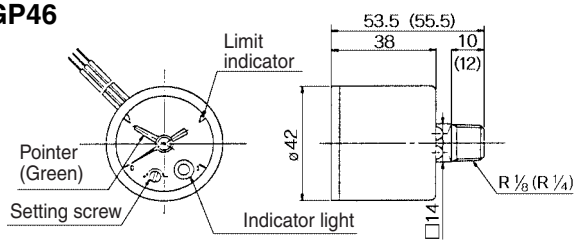

( ): R 1/4

GP46: With cover ring assembly (For panel mounting)

Clear cover is not removable.

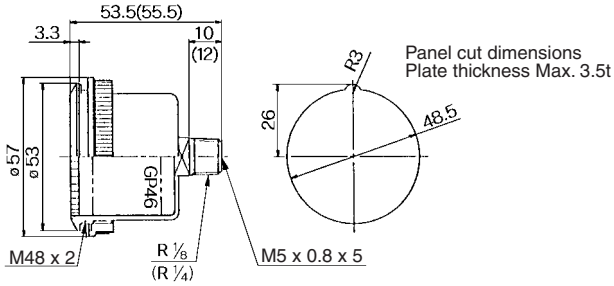

Refer to page 14-11-15 for mounting method.

Procedure for Setting the Limit Gauge Indicator

(1) Before setting the (green) limit indicator, turn the cover counterclockwise (approximately 6 to 7 mm) until it stops. Then, remove by pulling it towards you.

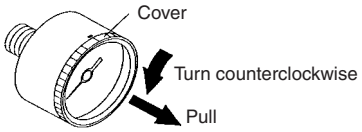

(2) Use a flat head screwdriver (with a 2.9 mm blade width) to set the (green) limit indicator. Be careful not to bend the other needle or damage the dial plate.

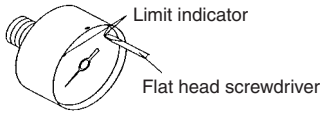

(3) After completing the setting, replace the cover. Fit the cover by aligning the cutout in the cover to the groove on the top of the black case. Turn the cover clockwise (approximately 6 to 7 mm) until it stops. Make sure that the matching mark on the cover is aligned with the groove on the top of the case.

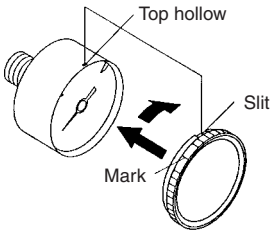

Procedure for Setting the Limit Gauge Indicator and the Setting Needle

(1) Before setting the limit indicator and the (green) setting needle, turn the cover counterclockwise (approximately 6 to 7 mm) until it stops. Then, remove by pulling it towards you.

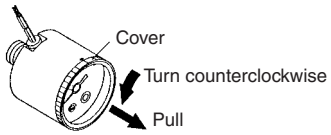

(2) Use a flat head screwdriver (with a 2.9 mm blade width) to set the (green) limit indicator. Be careful not to bend the other needle or damage the dial plate.

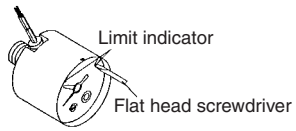

(3) Before setting the setting needle, use a flat head screwdriver (with a 2.9 mm blade width) to turn the setting screw and set the setting needle to the set pressure.

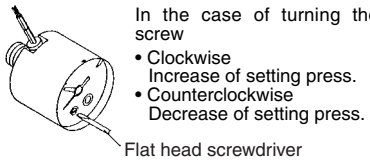

(4) After completing the setting, replace the cover. Fit the cover by aligning the cutout in the cover to the groove on the top of the black case. Turn the cover clockwise (approximately 6 to 7 mm) until it stops. Make sure that the matching mark on the cover is aligned with the groove on the top of the case.

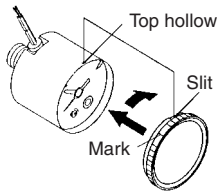

⚠ Precautions

Be sure to read before handling. Refer to pages 14-21-3 to 14-21-4 for Safety Instructions and Common Precautions.

Selection

⚠Caution

1. Do not apply high load voltage (current) or surge current as this can cause the switch to malfunction.
2. Make sure that no direct impact or vibrations are applied to the body.
3. If operating under pressure pulsations or in high frequency operations, please contact SMC.

Mounting

⚠Caution

1. During transport and installation, do not apply shock to the product, such as by dropping doing so will affect its precision.
2. Regarding the installation posture, place it perpendicular to the ground, with the zero point on the reading of a pressure gauge facing down.
3. Do not install it in an area that is exposed to high temperature or humidity, because doing so will lead to improper operation.
4. To screw in the pressure gauge, make sure to turn the gauge by placing a wrench over the square wrench flats.If the pressure gauge is screwed in by holding it on some other area, air leakage or damage may result.

Procedure for Assembling the Cover Ring Assembly

● **Pressure gauge for general purpose**

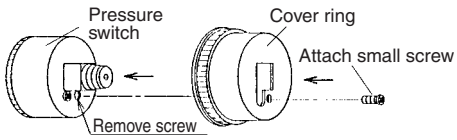

● **Pressure gauge with switch**

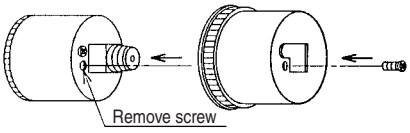

1. Remove the small screw (1 position) from the pressure gauge.
2. Place the cover ring on the pressure gauge.
3. Using the small screw that is provided with the cover ring, install the cover ring. The installation torque is 0.3 to 0.5 N·m.

Safety Instructions

These safety instructions are intended to prevent a hazardous situation and/or equipment damage. These instructions indicate the level of potential hazard by labels of **"Caution", "Warning"** or **"Danger"**. To ensure safety, be sure to observe ISO 4414 Note 1), JIS B 8370 Note 2) and other safety practices.

⚠ **Caution :** Operator error could result in injury or equipment damage.

⚠ **Warning :** Operator error could result in serious injury or loss of life.

⚠ **Danger :** In extreme conditions, there is a possible result of serious injury or loss of life.

Note 1) ISO 4414: Pneumatic fluid power--General rules relating to systems.
Note 2) JIS B 8370: General Rules for Pneumatic Equipment

⚠ Warning

1. The compatibility of pneumatic equipment is the responsibility of the person who designs the pneumatic system or decides its specifications.

Since the products specified here are used in various operating conditions, their compatibility for the specific pneumatic system must be based on specifications or after analysis and/or tests to meet your specific requirements. The expected performance and safety assurance will be the responsibility of the person who has determined the compatibility of the system. This person should continuously review the suitability of all items specified, referring to the latest catalog information with a view to giving due consideration to any possibility of equipment failure when configuring a system.

2. Only trained personnel should operate pneumatically operated machinery and equipment.

Compressed air can be dangerous if an operator is unfamiliar with it. Assembly, handling or repair of pneumatic systems should be performed by trained and experienced operators.

3. Do not service machinery/equipment or attempt to remove components until safety is confirmed.

1. Inspection and maintenance of machinery/equipment should only be performed once measures to prevent falling or runaway of the driver objects have been confirmed.
2. When equipment is to be removed, confirm the safety process as mentioned above. Cut the supply pressure for this equipment and exhaust all residual compressed air in the system.
3. Before machinery/equipment is restarted, take measures to prevent shooting-out of cylinder piston rod, etc.

4. Contact SMC if the product is to be used in any of the following conditions:

1. Conditions and environments beyond the given specifications, or if product is used outdoors.
2. Installation on equipment in conjunction with atomic energy, railway, air navigation, vehicles, medical equipment, food and beverages, recreation equipment, emergency stop circuits, clutch and brake circuits in press applications, or safety equipment.
3. An application which has the possibility of having negative effects on people, property, or animals, requiring special safety analysis.

Common Precautions

Be sure to read before handling.
For detailed precautions on every series, refer to main text.

Selection

⚠ Warning

1. Confirm the specifications.
Products represented in this catalog are designed for use in compressed air appllications only (including vacuum), unless otherwise indicated.
Do not use the product outside their design parameters.
Please contact SMC when using the products in applications other than compressed air (including vacuum).

Mounting

⚠ Warning

1. Instruction manual
Install the products and operate them only after reading the instruction manual carefully and understanding its contents. Also keep the manual where it can be referred to as necessary.

2. Securing the space for maintenance
When installing the products, please allow access for maintenance.

3. Tightening torque
When installing the products, please follow the listed torque specifications.

Piping

⚠ Caution

1. Before piping
Make sure that all debris, cutting oil, dust, etc, are removed from the piping.

2. Wrapping of pipe tape
When screwing piping or fittings into ports, ensure that chips from the pipe threads or sealing material do not get inside the piping. Also, when the pipe tape is used, leave 1.5 to 2 thread ridges exposed at the end of the threads.

Air Supply

⚠ Warning

1. Operating fluid
Please consult with SMC when using the product in applications other than compressed air (including vacuum).
Regarding products for general fluid, please ask SMC about applicable fluids.

2. Install an air dryer, aftercooler, etc.
Excessive condensate in a compressed air system may cause valves and other pneumatic equipment to malfunction.
Installation of an air dryer, after cooler etc. is recommended.

3. Drain flushing
If condensate in the drain bowl is not emptied on a regular basis, the bowl will over flow and allow the condensate to enter the compressed air lines.
If the drain bowl is difficult to check and remove, it is recommended that a drain bowl with the auto-drain option be installed.
For compressed air quality, refer to “Air Preparation Equipment” catalog.

4. Use clean air
If the compressed air supply is contaminated with chemicals, cynthetic materials, corrosive gas, etc., it may lead to break down or malfunction.

Operating Environment

⚠ Warning

1. Do not use in environments where the product is directly exposed to corrosive gases, chemicals, salt water, water or steam.

2. Do not expose the product to direct sunlight for an extended period of time.

3. Do not use in a place subject to heavy vibrations and/or shocks.

4. Do not mount the product in locations where it is exposed to radiant heat.

Maintenance

⚠ Warning

1. Maintenance procedures are outlined in the operation manual.
Not following proper procedures could cause the product to malfunction and could lead to damage to the equipment or machine.

2. Maintenance work
If handled improperly, compressed air can be dangerous.
Assembly, handling and repair of pneumatic systems should be performed by qualified personnel only.

3. Drain flushing
Remove drainage from air filters regularly. (Refer to the specifications.)

4. Shut-down before maintenance
Before attempting any kind of maintenance make sure the supply pressure is shut of and all residual air pressure is released from the system to be worked on.

5. Start-up after maintenance and inspection
Apply operating pressure and power to the equipment and check for proper operation and possible air leaks. If operation is abnormal, please verify product set-up parameters.

6. Do not make any modifications to be product.
Do not take the product apart.