Type 45

Series SX3000/5000
Base Mounted Manifold
Stacking Type DIN Rail Mounted
Individual Wiring

How to Order Manifold

SS5X 3 – 45 – □ □ – □ – □

Series

3	SX3000
5	SX5000

Valve stations

02	2 stations
⋮	⋮
20	20 stations

SUP/EXH block assembly mounting position

Symbol	Mounting position	Applicable stations
U	U side	2 to 10 stations
D	D side	
B	Both sides	2 to 20 stations
M	Special specifications	

∗ For special specifications, indicate separately by the manifold specification sheet.

A, B port size (Metric size)

Symbol	Port size	Applicable series
C4	One-touch fitting for ø4	SX3000
C6	One-touch fitting for ø6	
M	Mixed	
C4	One-touch fitting for ø4	SX5000
C6	One-touch fitting for ø6	
C8	One-touch fitting for ø8	
M	Mixed	

(Inch size)

Symbol	Port size	Applicable series
N3	One-touch fitting for ø5/32"	SX3000
N7	One-touch fitting for ø1/4"	
M	Mixed	
N3	One-touch fitting for ø5/32"	SX5000
N7	One-touch fitting for ø1/4"	
N9	One-touch fitting for ø5/16"	
M	Mixed	

∗ In the case of mixed specifications (M), indicate separately on the manifold specification sheet.

Option

When a longer DIN rail is desired than the specified stations, specify the station number to be required. (20 stations at maximum)

• Connector assembly for L and M types·····Refer to page 1-6-8.
• Common connector assembly for manifold·····Refer to page 1-6-9.

How to Order Valve Manifold Assembly

Ordering example

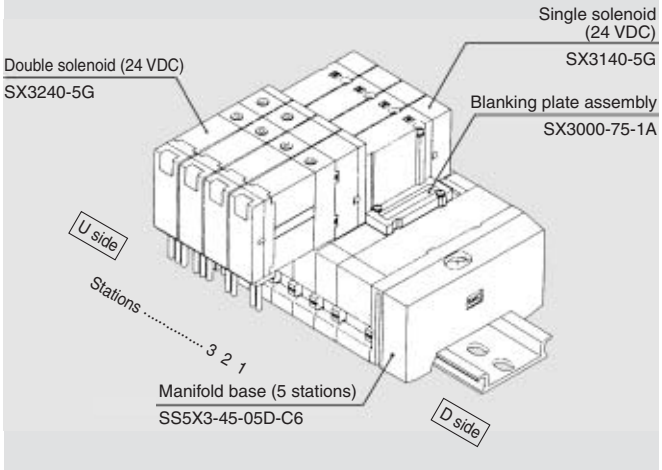

SS5X3-45-05D-C6 ···· 1 set (Type 45, 5-station manifold base part no.)
∗SX3000-75-1A ····· 1 set (Blanking plate assembly part no.)
∗SX3140-5G ····· 2 sets (Single solenoid part no.)
∗SX3240-5G ····· 2 sets (Double solenoid part no.)

∗ The asterisk denotes the symbol for assembly. Prefix it to the part nos. of the solenoid valve, etc.

The valve arrangement is numbered as the 1st. station from D side regardless of the mounting position of SUP/EXH block assembly. In ordering, specify the part nos. in the order from the 1st. station on D side. Besides, when the arrangement will be complicated, fill out the Manifold Specification Sheet to instruct us.

How to Order Valves

SX 5 2 40 — 5 N L □ □

Series

3	SX3000
5	SX5000

Type of actuation

1	2 position single
2	2 position double
3	3 position closed center
4	3 position exhaust center
5	3 position pressure center

Rated voltage

5	24 VDC
6	12 VDC
V	6 VDC
S	5 VDC
R	3 VDC

Common specifications

Nil	Positive common
N	Negative common

Note) Put nothing for single grommet style and single without indicator light and surge voltage suppresser.

Electrical entry

Grommet	L plug connector	M plug connector
G: Lead wire length 300 mm **H:** Lead wire length 600 mm	**L:** With lead wire (Length 300 mm) **LN:** Without lead wire **LO:** Without connector	**M:** With lead wire (Length 300 mm) **MN:** Without lead wire **MO:** Without connector

∗ The LN or MN option includes 2 sockets for single solenoid valves and 3 sockets for double solenoid valves.

Light/Surge voltage suppressor

Nil	Without light/surge voltage suppressor
S	With surge voltage suppressor
Z	With light/surge voltage suppressor

Manual override

Nil	Non-locking push type
D	Push-turn locking slotted type

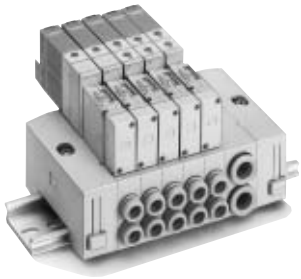

Manifold Specifications

Model		SS5X3-45	SS5X5-45
Applicable valve		SX3□40	SX5□40
Manifold type		Stacking type/DIN rail mounted	
P(SUP), R(EXH)		Common SUP/Common EXH	
Valve stations Note)		2 to 20 stations	
A, B port specifications	Location	Base	
	Direction	Side	
Port size	P, R port	C8 (One-touch fitting for ø8)	C10 (One-touch fitting for ø10)
	A, B port	C4 (One-touch fitting for ø4) C6 (One-touch fitting for ø6)	C4 (One-touch fitting for ø4) C6 (One-touch fitting for ø6) C8 (One-touch fitting for ø8)
Manifold base weight W (g) n: Stations		2 to 10 stations: W = 22n + 118 11 to 20 stations: W = 22n + 140	2 to 10 stations: W = 47n + 156 11 to 20 stations: W = 47n + 190

Note) For more than 11 stations, supply pressure to P port on both sides and exhaust from R port on both sides.

Flow Characteristics

Model	Port size		Flow characteristics					
			1 → 4/2 (P → A/B)			4/2 → 5/3 (A/B → EA/EB)		
	1, 5, 3 (P, EA, EB)	4, 2 (A, B)	C [dm^3/(s·bar)]	b	Cv	C [dm^3/(s·bar)]	b	Cv
SS5X3-45	C8	C6	0.88	0.21	0.22	0.95	0.18	0.22
SS5X5-45	C10	C8	2.2	0.24	0.53	2.5	0.18	0.58

Note) The value is for manifold base with 5 stations and individually operated 2 position type.

Manifold Option

■ Individual SUP spacer assembly

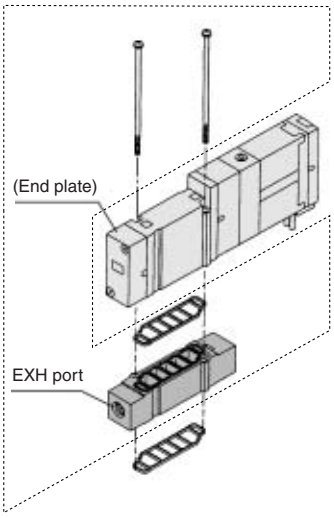

Series	Assembly part no.	Port size
SX3000	SX3000-38-2A	M5 x 0.8
SX5000	SX5000-38-16⊠A	1/8

Note) SUP port may be either on the lead wire side or the end plate side. (Factory assembled spacer will be shipped with the orientation shown in the figure.)

■ Individual EXH spacer assembly

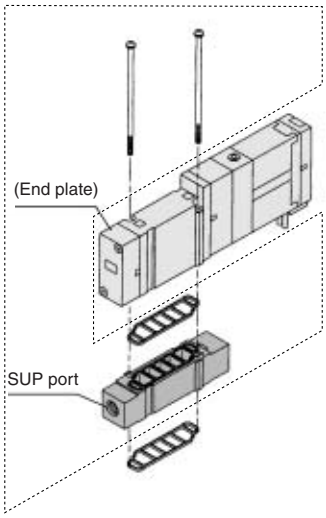

Series	Assembly part no.	Port size
SX3000	SX3000-39-2A	M5 x 0.8
SX5000	SX5000-39-16⊠A	1/8

Note) The EXH port may be either on the lead wire side or on the end plate side.

∗ Thread type

Nil	Rc
F	G
N	NPT
T	NPTF

■ Blanking plate assembly

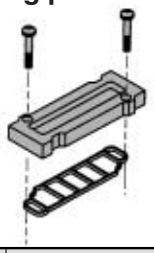

Series	Assembly part no.
SX3000	SX3000-75-1A
SX5000	SX5000-76-1A

■ Dimensions/DIN rail

VZ1000－11－1－□

● Refer to L dimensions

∗ Fill in l with an appropriate no. listed on the table of DIN rail dimensions shown below.

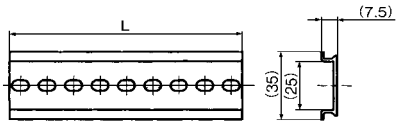

No.	0	1	2	3	4	5	6	7	8	9	10
L dimension	98	110.5	123	135.5	148	160.5	173	185.5	198	210.5	223
No.	11	12	13	14	15	16	17	18	19	20	21
L dimension	235.5	248	260.5	273	285.5	298	310.5	323	335.5	348	360.5
No.	22	23	24	25	26	27	28	29	30	31	32
L dimension	373	385.5	398	410.5	423	435.5	448	460.5	473	485.5	498
No.	33	34	35	36	37	38	39	40	41	42	43
L dimension	510.5	523	535.5	548	560.5	573	585.5	598	610.5	623	635.5
No.	44	45	46	47	48	49	50	51	52	53	54
L dimension	648	660.5	673	685.5	698	710.5	723	735.5	748	760.5	773
No.	55	56	57	58	59	60	61	62	63	64	65
L dimension	785.5	798	810.5	823	835.5	848	860.5	873	885.5	898	910.5
No.	66	67	68	69	70	71					
L dimension	923	935.5	948	960.5	973	985.5					

■ SUP block disk

By installing a SUP block disk in the pressure supply passage of a manifold valve, it is possible to supply two or more different high and low pressures to one manifold.

Series	Part no.
SX3000	SX3000-77-1A
SX5000	SX5000-77-1A

■ EXH block disk

By installing an EXH block disk in the exhaust passage of a manifold valve, it is possible to divide the valve's exhaust so that it does not affect another valve. (Two block disks are needed to divide both exhausts.)

Series	Part no.
SX3000	SX3000-77-1A
SX5000	SX5000-77-1A

■ Lable for block disk

The labels shown below are used on manifold stations containing SUP/EXH block disk(s) to show their location. (3 pcs. each)

VZ3000-123-1A

Label for SUP block disk

Label for EXH block disk

Label for SUP/EXH block disk

Note) When a block disk is concurrently ordered by specifying on the manifold specification sheet, etc., a label will be stuck on the position where block disk is mounted.

■ Silencer with One-touch fitting

This silencer can be mounted on the manifold's port R (exhaust) with a single touch.

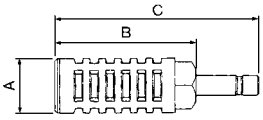

Series	Model	Effective area	A	B	C
SX3000 (ø8)	AN203-KM8	14 mm²	ø16	26	51
SX5000 (ø10)	AN200-KM10	26 mm²	ø22	53.8	80.8
	AN300-KM10	30 mm²	ø25	70	97

■ Plug

These are inserted in cylinder ports or SUP/EXH ports which are not being used.
Purchasing order is available in units of 10 pieces.

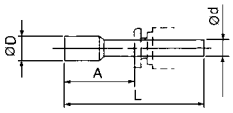

Dimensions

Applicable fittings fitting ød	Model	A	L	D
4	**KQ2P-04**	16	32	6
6	**KQ2P-06**	18	35	8
8	**KQ2P-08**	20.5	39	10
10	**KQ2P-10**	22	43	12
5/32"	**KQ2P-03**	16	32	6
1/4"	**KQ2P-07**	18	35	8.5
5/16"	**KQ2P-09**	20.5	39	10
3/8"	**KQ2P-11**	22	43	11.5

⚠ Caution

Mounting screw tightening torques

M2: 0.17 N·m
M3: 0.8 N·m
M4: 1.4 N·m

⚠ Warning

When mounting a valve or spacer on the manifold base or sub-plate, etc., those mounting directions are determined. If mounted in the wrong direction, the equipment to be connected may cause malfunction. Refer to external dimensions in pages 1-6-78 to 1-6-79, and then mount it.

Dimensions: Series SX3000

SS5X3-45- Stations D-C4/C6

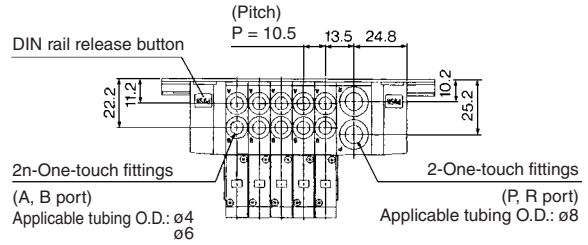

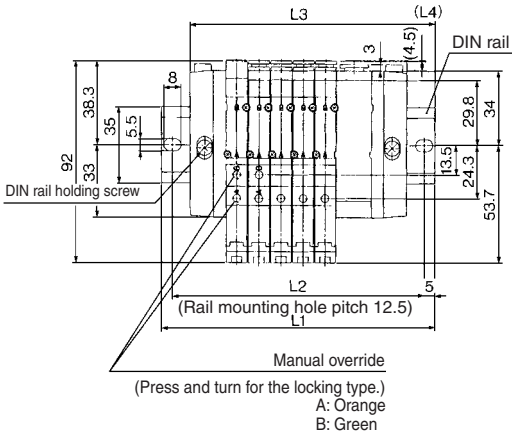

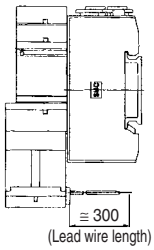

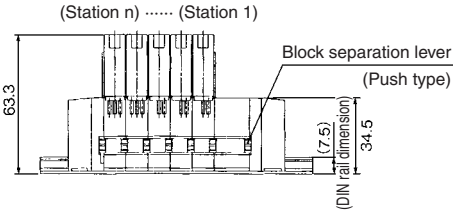

SS5X3-45- Stations U-C4/C6

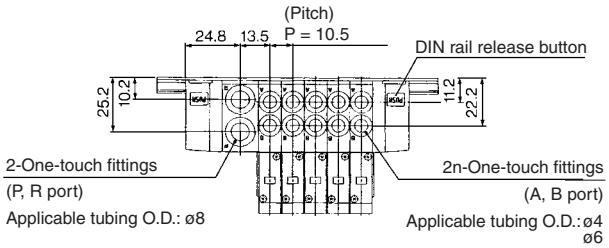

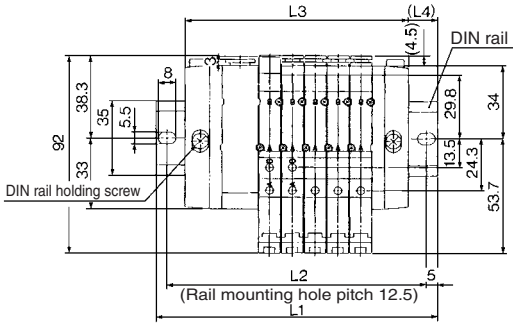

(mm)

Stations n	2 stations	3	4	5	6	7	8	9	10 stations
L1	98	110.5	123	135.5	148	148	160.5	173	185.5
L2	87.5	100	112.5	125	137.5	137.5	150	162.5	175
L3	70.5	81	91.5	102	112.5	123	133.5	144	154.5
L4	13.5	14.5	15.5	16.5	17.5	12.5	13.5	14.5	15.5

SS5X3-45- Stations B-C4/C6

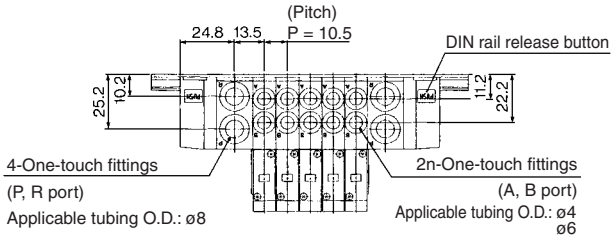

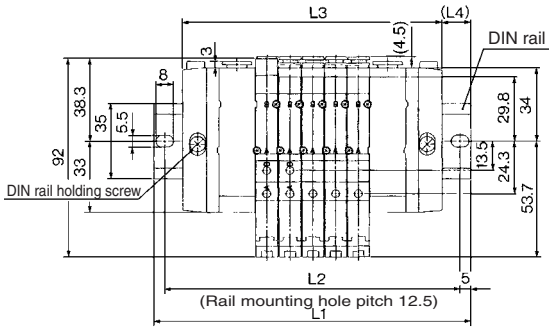

(mm)

Stations n	2 stations	3	4	5	6	7	8	9	10 stations
L1	110.5	123	135.5	148	160.5	173	185.5	185.5	198
L2	100	112.5	125	137.5	150	162.5	175	175	187.5
L3	87	97.5	108	118.5	129	139.5	150	160.5	171
L4	11.5	12.5	13.5	14.5	15.5	16.5	17.5	12.5	13.5

Stations n	11 stations	12	13	14	15	16	17	18	19	20 stations
L1	210.5	223	235.5	248	248	260.5	273	285.5	298	310.5
L2	200	212.5	225	237.5	237.5	250	262.5	275	287.5	300
L3	181.5	192	202.5	213	223.5	234	244.5	255	265.5	276
L4	14.5	15.5	16.5	17.5	12	13	14	15	16	17

L plug connector

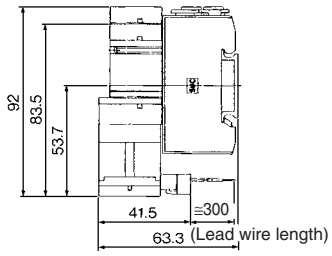

M plug connector

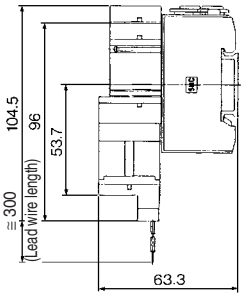

Exploded View/DIN Rail Manifold

Type 45

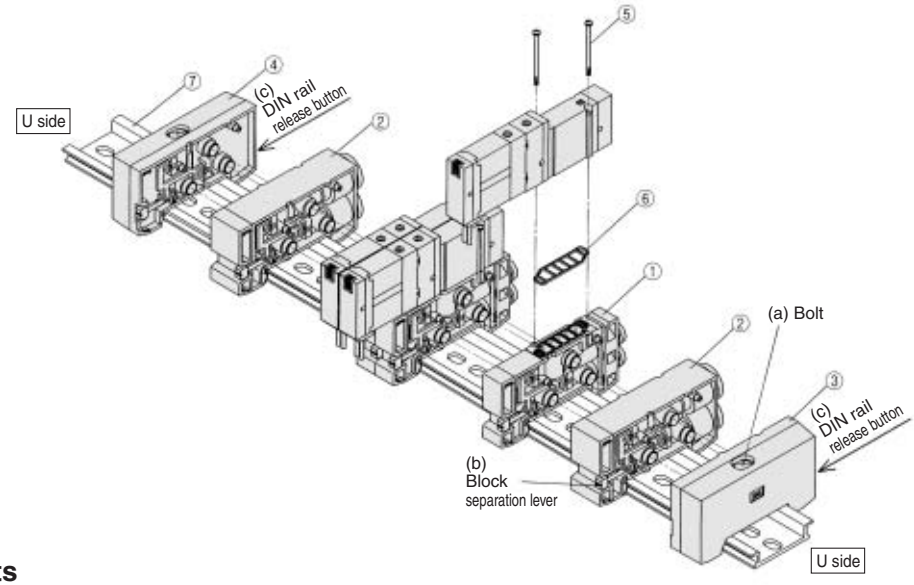

Replacement Parts

No.	Description	Part no. SX3000	Part no. SX5000	Note
①	Manifold block assembly	SX3000-50-1A-□□□□	SX5000-50-1A-C6□□□□□□	• SX3000 (Metric size) (Inch size) C4: With One-touch fitting for ø4 N3: With One-touch fitting for ø5/32" C6: With One-touch fitting for ø6 N7: With One-touch fitting for ø1/4" SX5000 (Metric size) (Inch size) C4: With One-touch fitting for ø4 N3: With One-touch fitting for ø5/32" C6: With One-touch fitting for ø6 N7: With One-touch fitting for ø1/4" C8: With One-touch fitting for ø8 N9: With One-touch fitting for ø5/16" (Gasket ⑥ is included.)
②	SUP/EXH block assembly	(Metric size) SX3000-51-1A (Inch size) SX3000-51-15A	(Metric size) SX5000-51-1A (Inch size) SX3000-51-15A	P, R port SX3000 (Metric size) With One-touch fitting for ø8 (Inch size) With One-touch fittings for ø5/16" P, R port SX5000 (Metric size) With One-touch fitting for ø10 (Inch size) With One-touch fittings for ø3/8"
③	End block assembly R	SX3000-52-1A	SX5000-52-1A	For D side
④	End block assembly L	SX3000-53-1A	SX5000-53-1A	For U side
⑤	Round head combination screw	SX3000-22-2 (M2 x 24)	M3 x 30 (Matt nickel plated)	
⑥	Gasket	SX3000-57-4	SX5000-57-6	
⑦	DIN rail	VZ1000-11-1-□		Refer to page 1-6-77.

How to Increase Manifold Bases

Station expansion is possible at any position.

(1) Loosen bolt (a) fixing the manifold base until it begins to turn idly. (While pressing DIN rail release buttons (c) at two locations, separate the manifold base from the DIN rail.)

(2) Press manifold block assembly splitting button (b), that are at the location where manifold bases are to be added, until button (b) locks, and then separate the block assemblies.

(3) Mount additional manifold block assembly on the DIN rail as shown in the figure.

(4) Press the block assembly until a click sound is produced, and tighten the bolts (a) to fix them to the DIN rail.
⚠**Caution** (Tightening torque: 1.4 N·m)
(While lightly holding the blocks after fixing an end block on one side, tighten the other end block for better sealing.)

Fig. (1) Block mounting procedure

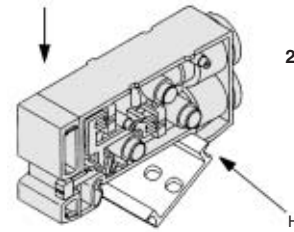

Hook this section on the DIN rail and press in the direction of the arrow until a click sound is generated.

⚠Caution

1. When adding manifold bases to use more than 10 stations, add SUP/EXH block assembly, as well.
2. When bolt (a) for the end block is not sufficiently tightened during reassembly, air leakage may result. Before supplying air, check that there is no gap between blocks and that the manifold block is firmly fixed to the DIN rail in order to ensure air supply without leakage.

How to Change Fitting Assembly

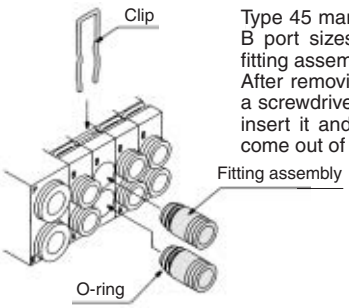

Type 45 manifold permits change in the A and B port sizes by changing the manifold block fitting assembly.
After removing the valve, remove the clip with a screwdriver. To mount a new fitting assembly insert it and then insert a clip so it does not come out of the manifold block.

Fitting Assembly Part No.

Metric size

SX3000	One-touch fitting for ø4	VVQ1000-50A-C4
	One-touch fitting for ø6	VVQ1000-50A-C6
SX5000	One-touch fitting for ø4	VVQ1000-51A-C4
	One-touch fitting for ø6	VVQ1000-51A-C6
	One-touch fitting for ø8	VVQ1000-51A-C8

Inch size

SX3000	One-touch fitting for ø5/32"	VVQ1000-50A-N3
	One-touch fitting for ø1/4"	VVQ1000-50A-N7
SX5000	One-touch fitting for ø5/32"	VVQ1000-51A-N3
	One-touch fitting for ø1/4"	VVQ1000-51A-N7
	One-touch fitting for ø5/16"	VVQ1000-51A-N9

Note 1) P and R ports cannot be changed.
Note 2) Use caution that O-rings must be free from scratches and dust. Otherwise, air leakage may result.

Type 45□

Series SX3000/5000
Base Mounted Manifold
Stacking Type DIN Rail Mounted
Plug-in

How to Order Manifold

Type 45F (D-sub connector, 25 pins type)

SS5X 3 – 45 □ F D – 05 U – C4 – □ – □

Series

3	SX3000
5	SX5000

Common specifications

Nil	Positive common
N	Negative common

Connector mounting position

Symbol	Mounting position
U	U side
D	D side

Valve stations

Symbol	Stations	Note
02	2 stations	Double wiring specifications(1)
⋮	⋮	
10	10 stations	
02	2 stations	Available up to 20 solenoids. Specify(2) the wiring specifications on the manifold specification sheet.
⋮	⋮	
20	20 stations	

• This also includes the number of blanking plate assembly.

Note 1) Double wiring specifications: Single, double and 3 position solenoid valves can be used on all manifold stations.

Note 2) Specified layout: Indicate wiring specifications on the manifold specification sheet. (Note that double and 3 position valves cannot be used where single solenoid wiring has been specified.).

SUP/EXH block assembly mounting position

Symbol	Mounting position	Stations
U	U side	2 to 10 stations
D	D side	2 to 10 stations
B	Both sides	2 to 20 stations
M	Special specifications	

∗ For special specifications, indicate separately by the manifold specification sheet.

A, B port size (Metric size)

Symbol	Port size	Applicable series
C4	One-touch fitting for ø4	SX3000
C6	One-touch fitting for ø6	
M	Mixed	
C4	One-touch fitting for ø4	SX5000
C6	One-touch fitting for ø6	
C8	One-touch fitting for ø8	
M	Mixed	

(Inch size)

Symbol	Port size	Applicable series
N3	One-touch fitting for ø5/32"	SX3000
N7	One-touch fitting for ø1/4"	
M	Mixed	
N3	One-touch fitting for ø5/32"	SX5000
N7	One-touch fitting for ø1/4"	
N9	One-touch fitting for ø5/16"	
M	Mixed	

∗ In the case of mixed specifications (M), indicate separately on the manifold specification sheet.

Voltage

Nil	24 VDC
12V	12 VDC

Option

When a longer DIN rail is desired than the specified stations, specify the station number to be required. (20 stations at maximum)

How to Order Valve Manifold Assembly

Ordering example (Type 45F/D-sub connector (25 pins) type)

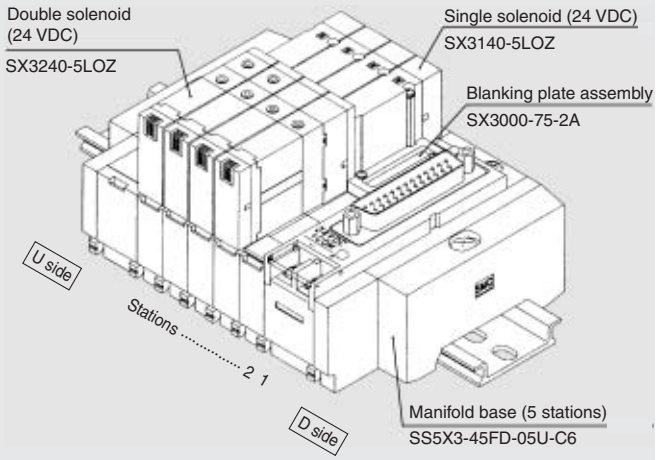

SS5X3-45FD-05U-C6 ·· 1 set (Type 45F D-sub connector 5 stations manifold base no.)
∗SX3000-75-2A ····· 1 set (Blanking plate assembly part no.)
∗SX3140-5LOZ ····· 2 sets (Single solenoid part no.)
∗SX3240-5LOZ ····· 2 sets (Double solenoid part no.)

∗ The asterisk denotes the symbol for assembly. Prefix it to the part nos. of the solenoid valve, etc.

• They will be assembled in the order listed starting at the first station at the D side even if the connector box is located at either end. When ordering with the double wiring specification, specify it in order, beginning with the 1 station on the D side.
• When special wiring is required, use the manifold specification sheet.

How to Order Valves (Type 45F, 45P□, 45T, 45T1)

SX 3 2 40 – 5 □ LOZ □

Series

3	SX3000
5	SX5000

Type of actuation

1	2 position single
2	2 position double
3	3 position closed center
4	3 position exhaust center
5	3 position pressure center

Rated voltage

5	24 VDC
6	12 VDC
V ∗	6 VDC
S ∗	5 VDC
R ∗	3 VDC

∗ Only Type 45T and 45T1 are available.

Common specifications

Nil	Positive common
N	Negative common

∗ Common specifications for the valve must correspond with common specifications for the manifold.

Manual override

Nil	Non-locking push type
D	Push-turn locking slotted type

How to Order Manifold

Type 45P□ (Flat ribbon cable type)

SS5X 3 – 45 □ P □ D – 05 U – C4 – □ – □

Series

3	SX3000
5	SX5000

Common specifications

Nil	Positive common
N	Negative common

Connector poles

Symbol	Poles	Stations
Nil	26	2 to 20 stations
G	20	2 to 16 stations
H	10	2 to 8

Connector mounting position

Symbol	Mounting position
U	U side
D	D side

SUP/EXH block assembly mounting position

Symbol	Mounting position	Stations
U	U side	2 to 10 stations
D	D side	2 to 10 stations
B	Both sides	2 to 20 stations
M	Special specifications	

∗ For special specifications, indicate separately by the manifold specification sheet.

A, B port size (Metric size)

Symbol	Port size	Applicable series
C4	One-touch fitting for ø4	SX3000
C6	One-touch fitting for ø6	
M	Mixed	
C4	One-touch fitting for ø4	SX5000
C6	One-touch fitting for ø6	
C8	One-touch fitting for ø8	
M	Mixed	

(Inch size)

Symbol	Port size	Applicable series
N3	One-touch fitting for ø5/32"	SX3000
N7	One-touch fitting for ø1/4"	
M	Mixed	
N3	One-touch fitting for ø5/32"	SX5000
N7	One-touch fitting for ø1/4"	
N9	One-touch fitting for ø5/16"	
M	Mixed	

∗ In the case of mixed specifications (M), indicate separately on the manifold specification sheet.

Option

When a longer DIN rail is desired than the specified stations, specify the station number to be required. (20 stations at maximum)

Voltage

Nil	24 VDC
12V	12 VDC

Valve stations (Blanking plate assemblies are included.)

26 pins (P) connector

Symbol	Stations	Note
02	2 stations	Double wiring(1) specifications
⋮	⋮	
10	10 stations	
02	2 stations	Applicable up to 20(2) solenoids.
⋮	⋮	
20	20 stations	

20 pins (PG) connector

Symbol	Stations	Note
02	2 stations	Double wiring(1) specifications
⋮	⋮	
08	8 stations	
02	2 stations	Applicable up to 16(2) solenoids.
⋮	⋮	
16	16 stations	

10 pins (PH) connector

Symbol	Stations	Note
02	2 stations	Double wiring(1) specifications
⋮	⋮	
04	4 stations	
02	2 stations	Applicable up to 8(2) solenoids.
⋮	⋮	
08	8 stations	

Note 1) Double wiring specifications: Single, double and 3 position solenoid valves can be used on all manifold stations.
Note 2) Specified layout: Indicate wiring specifications on the manifold specification sheet. (Note that double and 3 position valves cannot be used where single solenoid wiring has been specified.).

Type 45T (9 pins terminal block type)

SS5X 3 – 45T D – 05 U – C4 – □

Series

3	SX3000
5	SX5000

Terminal block mounting position

Symbol	Mounting position
U	U side
D	D side

Valve stations

Symbol	Stations	Note
02	2 stations	Double wiring(1) specifications
⋮	⋮	
04	4 stations	
02	2 stations	Applicable up to 8(2) solenoids.
⋮	⋮	
08	8 stations	

• This also includes the number of blanking plate assemblies.

SUP/EXH block assembly mounting position

Symbol	Mounting position	Stations
U	U side	2 to 8
D	D side	2 to 8
B	Both sides	2 to 8
M	Special specifications	

∗ For special specifications, indicate separately by the manifold specification sheet.

A, B port size (Metric size)

Symbol	Port size	Applicable series
C4	One-touch fitting for ø4	SX3000
C6	One-touch fitting for ø6	
M	Mixed	
C4	One-touch fitting for ø4	SX5000
C6	One-touch fitting for ø6	
C8	One-touch fitting for ø8	
M	Mixed	

(Inch size)

Symbol	Port size	Applicable series
N3	One-touch fitting for ø5/32"	SX3000
N7	One-touch fitting for ø1/4"	
M	Mixed	
N3	One-touch fitting for ø5/32"	SX5000
N7	One-touch fitting for ø1/4"	
N9	One-touch fitting for ø5/16"	
M	Mixed	

∗ In the case of mixed specifications (M), indicate separately on the manifold specification sheet.

Option

When a longer DIN rail is desired than the specified stations, specify the station number to be required. (20 stations maximum)

Type 45T1 (18 pins terminal block type)

SS5X 3 – 45T1 D – 05 U – C4 – □

Series

3	SX3000
5	SX5000

Terminal block mounting position

Symbol	Mounting position
U	U side
D	D side

Valve stations

Symbol	Stations	Note
02	2 stations	Double wiring(1) specifications
⋮	⋮	
08	8 stations	
02	2 stations	Applicable up to 17(2) solenoids.
⋮	⋮	
17	17	

• This also includes the number of blanking plate assemblies.

SUP/EXH block assembly mounting position

Symbol	Mounting position	Stations
U	U side	2 to 10 stations
D	D side	2 to 10 stations
B	Both sides	2 to 17
M	Special specifications	

∗ For special specifications, indicate separately by the manifold specification sheet.

A, B port size (Metric size)

Symbol	Port size	Applicable series
C4	One-touch fitting for ø4	SX3000
C6	One-touch fitting for ø6	
M	Mixed	
C4	One-touch fitting for ø4	SX5000
C6	One-touch fitting for ø6	
C8	One-touch fitting for ø8	
M	Mixed	

(Inch size)

Symbol	Port size	Applicable series
N3	One-touch fitting for ø5/32"	SX3000
N7	One-touch fitting for ø1/4"	
M	Mixed	
N3	One-touch fitting for ø5/32"	SX5000
N7	One-touch fitting for ø1/4"	
N9	One-touch fitting for ø5/16"	
M	Mixed	

∗ In the case of mixed specifications (M), indicate separately on the manifold specification sheet.

Option

When a longer DIN rail is desired than the specified stations, specify the station number to be required. (20 stations maximum)

Note 1) Double wiring specifications: Single, double and 3 position solenoid valves can be used on all manifold stations.
Note 2) Specified layout: Indicate wiring specifications on the manifold specification sheet. (Note that double and 3 position valves cannot be used where single solenoid wiring has been specified.)
Note 3) The terminal block (45T□) manifold has no common polarity. It can be used for both positive and negative common.

How to Order Manifold

Type 45□P (Flat ribbon cable type (PC wiring system compatible))

SS5X 3 – 45G D – 05 U – C4 □ – □

Series

3	SX3000
5	SX5000

Connector mounting position

Symbol	Mounting position
U	U side
D	D side

Valve stations

Symbol	Stations	Note
02	2 stations	Double wiring[1] specifications
⋮	⋮	
08	8 stations	
02	2 stations	Applicable up to 16[2] solenoids.
⋮	⋮	
16	16 stations	

• This also includes the number of blanking plate assemblies.
Note 1) Double wiring specifications: Single, double and 3 position solenoid valves can be used on all manifold stations.
Note 2) Specified layout: Indicate wiring specifications on a manifold specification sheet. (Note that double and 3 position valves cannot be used where single solenoid wiring has been specified.)

Option

When a longer DIN rail is desired than the specified stations, specify the station number to be required. (20 stations at maximum)

A, B port size

(Metric size)

Symbol	Port size	Applicable series
C4	One-touch fitting for ø4	SX3000
C6	One-touch fitting for ø6	
M	Mixed	
C4	One-touch fitting for ø4	SX5000
C6	One-touch fitting for ø6	
C8	One-touch fitting for ø8	
M	Mixed	

(Inch size)

Symbol	Port size	Applicable series
N3	One-touch fitting for ø5/32"	SX3000
N7	One-touch fitting for ø1/4"	
M	Mixed	
N3	One-touch fitting for ø5/32"	SX5000
N7	One-touch fitting for ø1/4"	
N9	One-touch fitting for ø5/16"	
M	Mixed	

∗ In the case of mixed specifications (M), indicate separately on the manifold specification sheet.

SUP/EXH block assembly mounting position

Symbol	Mounting position	Stations
U	U side	2 to 10 stations
D	D side	2 to 10 stations
B	Both sides	2 to 16 stations
M	Special specifications	

∗ For special specifications, indicate separately by the manifold specification sheet.

SUP/EXH block assembly specifications

Symbol	Specifications
Nil	Internal pilot specifications
R	External pilot specifications
S	Internal pilot/Built-in silencer
RS	External pilot/Built-in silencer

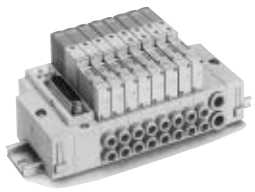

D-sub connector

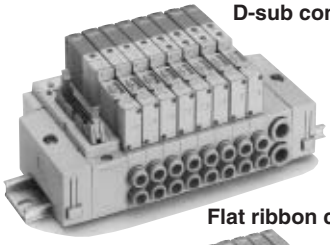

Flat ribbon cable

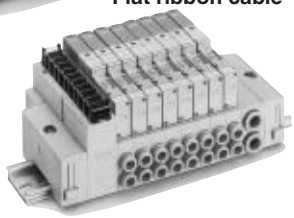

Terminal block

Manifold Specifications

Model			D-sub connector Type 45F	Flat ribbon cable type 45P□			Terminal block		Flat ribbon cable PC wiring system compatible
				Type 45P	Type 45PG	Type 45PH	Type 45T	Type 45T1	Type 45G
Manifold			Plug-in type						
P(SUP), R(EXH)			Common SUP/Common EXH						
Valve stations Note)			2 to 20 stations		2 to 16 stations	2 to 8 stations		2 to 17 stations	2 to 16 stations
A, B porting specifications		Location	Base						
		Direction	Side						
Port size	P, R port	SX3000	C8 (One-touch fitting for ø8)						
		SX5000	C10 (One-touch fitting for ø10)						
	A, B port	SX3000	C4 (One-touch fitting for ø4)/C6 (One-touch fitting for ø6)						
		SX5000	C4 (One-touch fitting for ø4)/C6 (One-touch fitting for ø6)/C8 (One-touch fitting for ø8)						
Connector			D-sub connector: Conforms to MIL-C-24308	Flat ribbon cable connector socket: 26 pins MIL with strain relief; Conforming to MIL-C-83503	Flat ribbon cable connector socket: 20 pins MIL with strain relief; Conforming to MIL-C-83503	Flat ribbon cable connector socket: 10 pins MIL with strain relief; Conforming to MIL-C-83503	Terminal block (M3) 9 pins	Terminal block (M3) 18 pins	Flat ribbon cable connector socket: 20 pins MIL with strain relief; Conforming to MIL-C-83503
Internal wiring			+COM (Type 45□), –COM (Type 45N□)				In common between +COM and –COM.		+ COM
Manifold base weight W (g) n: Stations (D-sub connector)		SX3000	2 to 10 stations: W = 26n + 172 11 to 20 stations: W = 26n + 199						
		SX5000	2 to 10 stations: W = 54n + 227 11 to 20 stations: W = 54n + 264						

Note) There is a limit to the number of stations available depending on the number of solenoids required. Please refer to the "How to Order". For more than 10 stations, supply pressure through the "P" ports at both ends of the manifold exhaust through both ends as well.

Flow Characteristics

Model	Port size		Flow characteristics					
			1 → 4/2 (P → A/B)			4/2 → 5/3 (A/B → EA/EB)		
	1, 5, 3 (P, EA, EB)	4, 2 (A, B)	C [dm³/(s·bar)]	b	Cv	C [dm³/(s·bar)]	b	Cv
SS5X3-45I	C8	C6	0.88	0.21	0.22	0.95	0.18	0.22
SS5X5-45I	C10	C8	2.2	0.24	0.53	2.5	0.18	0.58

Note) The value is for manifold base with 5 stations and individually operated 2 position type.

Manifold Option

■ Blanking plate assembly

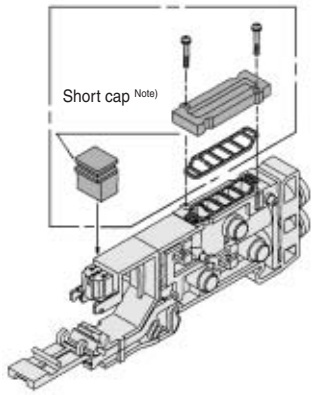

Series	Assembly part no.
SX3000	SX3000-75-2A
SX5000	SX5000-76-2A

Note) When mounting blanking plate, be sure to mount a short cap.

■ SUP block disk

By installing a SUP block disk in the pressure supply passage of a manifold valve, it is possible to supply two or more different high and low pressures to one manifold.

Series	Part no.
SX3000	SX3000-77-1A
SX5000	SX5000-77-1A

■ EXH block disk

By installing an EXH block disk in the exhaust passage of a manifold valve, it is possible to divide the valve's exhaust so that it does not affect another valve. (Two block disks are needed to divide both exhausts.)

Series	Part no.
SX3000	SX3000-77-1A
SX5000	SX5000-77-1A

■ Label for block disk

The labels shown below are used on manifold stations containing SUP/EXH block disk(s) to show their location. (3 pcs. each)

VZ3000-123-1A (In common between SX3000 and 5000)

Label for SUP block disk

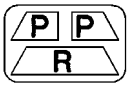

Label for EXH block disk

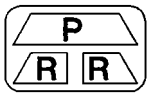

Label for SUP/EXH block disk

Note) When a block disk is concurrently ordered by specifying on the manifold specification sheet, etc., a label will be stuck on the position where block disk is mounted.

■ Silencer with One-touch fitting

This silencer can be mounted on the manifold's port R (exhaust) with a single touch.

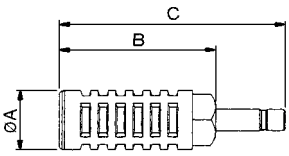

Series	Model	Effective area	A	B	C
SX3000 (ø8)	AN203-KM8	14 mm²	16	26	51
SX5000 (ø10)	AN200-KM10	26 mm²	22	53.8	80.8
	AN300-KM10	30 mm²	25	70	97

Manifold Option

■ D-sub connector (25 pins)/Cable assembly

AXT100-DS25- 015 / 030 / 050

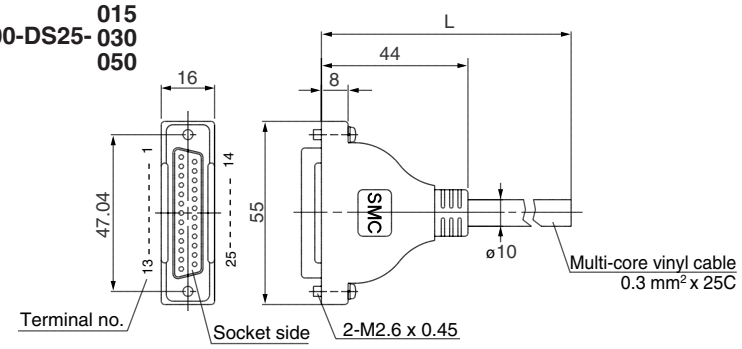

D-sub Connector Cable Assembly Terminal No.

Terminal no.	Lead wire color	Dot marking
1	Black	None
2	Brown	None
3	Red	None
4	Orange	None
5	Yellow	None
6	Pink	None
7	Blue	None
8	Purple	White
9	Gray	Black
10	White	Black
11	White	Red
12	Yellow	Red
13	Orange	Red
14	Yellow	Black
15	Pink	Black
16	Blue	White
17	Purple	None
18	Gray	None
19	Orange	Black
20	Red	White
21	Brown	White
22	Pink	Red
23	Gray	Red
24	Black	White
25	White	None

Connector manufacturers' example

- **Hirose Electric Co., Ltd.**
- **Fujitsu Limited**
- **Japan Aviation Electronics Industry, Ltd.**
- **J.S.T. Mfg, Co., Ltd.**

D-sub Connector Cable Assembly

Cable length (L)	Assembly part no.	Note
1.5 m	AXT100-DS25-015	Cable 25 cores x 24AWG
3 m	AXT100-DS25-030	
5 m	AXT100-DS25-050	

∗ For other commercial connectors, use a 25 pins type with female connector conforming to MIL-C-24308.

Electric Characteristics

Item	Characteristics
Conductor resistance Ω/km, 20°C	65 or less
Voltage limit VAC, 1 min.	1000
Insulation resistance MΩkm, 20°C	5 or less

∗ The minimum bending radius of D-sub connector cable assembly is 20 mm.

■ Flat ribbon cable connector/Cable assembly

AXT100-FC□- 1 to 3

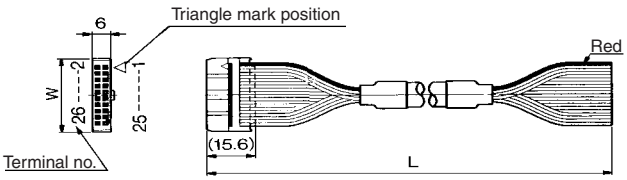

Flat Ribbon Cable Assembly

Cable length (L)	10 pins	20 pins	26 pins
1.5 m	AXT100-FC10-1	AXT100-FC20-1	AXT100-FC26-1
3 m	AXT100-FC10-2	AXT100-FC20-2	AXT100-FC26-2
5 m	AXT100-FC10-3	AXT100-FC20-3	AXT100-FC26-3
Connector width (W)	17.2	30	37.5

∗ For other commercial connectors, use a type with strain relief that conform to MIL-C-83503.

Connector manufacturers' example

- **Hirose Electric Co., Ltd.**
- **Sumitomo 3M Limited**
- **Fujitsu Limited**
- **Japan Aviation Electronics Industry, Ltd.**
- **J.S.T. Mfg, Co., Ltd.**

■ Individual SUP spacer assembly

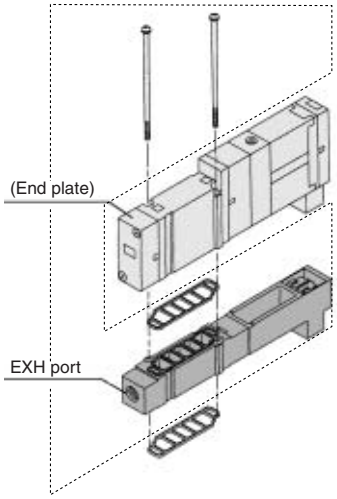

Series	Assembly part no.	Port size
SX3000	SX3000-38-3A	M5 x 0.8
SX5000	SX5000-38-17⊠A	1/8

■ Individual EXH spacer assembly

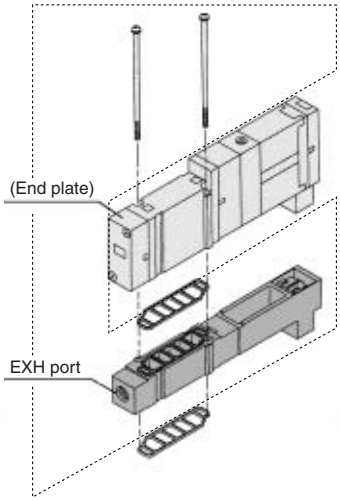

Series	Assembly part no.	Port size
SX3000	SX3000-39-3A	M5 x 0.8
SX5000	SX5000-39-17⊠A	1/8

■ Plug

Inserted into an unused cylinder port and SUP/EXH ports. Purchasing order is available in units of 10 pieces.

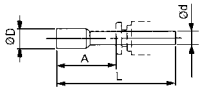

∗ **Thread type**

Nil	Rc
F	G
N	NPT
T	NPTF

Dimensions

Applicable fittings size ød	Model	A	L	D
4	**KQ2P-04**	16	32	6
6	**KQ2P-06**	18	35	8
8	**KQ2P-08**	20.5	39	10
10	**KQ2P-10**	22	43	12
5/32"	**KQ2P-03**	16	32	6
1/4"	**KQ2P-07**	18	35	8.5
5/16"	**KQ2P-09**	20.5	39	10
3/8"	**KQ2P-11**	22	43	11.5

⚠ Caution

Mounting screw tightening torques

M2: 0.17 N·m
M3: 0.8 N·m
M4: 1.4 N·m

⚠ Warning

When mounting a valve or spacer on the manifold base or sub-plate, etc., those mounting directions are determined. If mounted in the wrong direction, the equipment to be connected may cause malfunction. Refer to external dimensions in pages 1-6-92 to 1-6-109, and then mount it.

Internal Wiring of Manifold

Type 45(N)F: D-sub Connector

A D-sub connector used for electric wiring reduces labor during wiring operation. Connectors conforming to MIL are used for interchangeability.

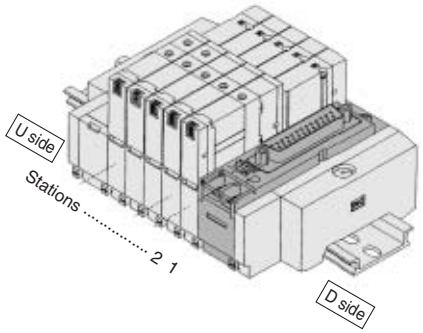

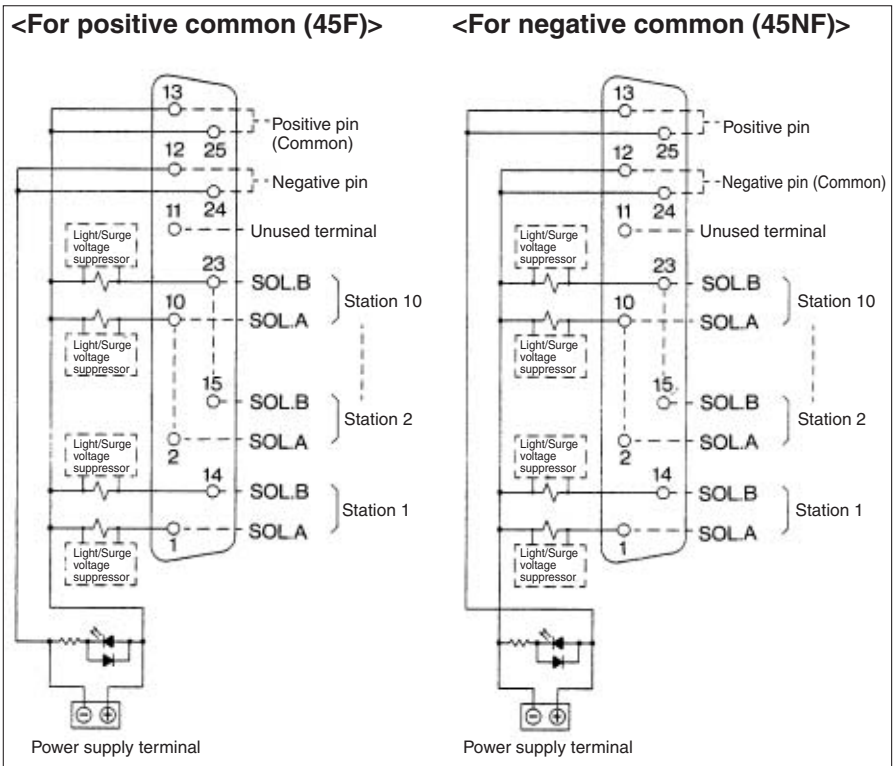

- The power source terminal is used for connecting to an external power source.
- The above diagram is the double wiring specifications for up to 10 stations. When the wiring specifications are specified on the manifold specification sheet, the valve assignment for the connector number will differ from the above diagram. For more information, please contact SMC.
- When using a single solenoid valve, connect wire to SOL.A.
- The maximum number of stations is 20 in terms of manifold bases, as well as solenoids. (Please consult with SMC for more stations.)
- Regardless of the connector mounting position, stations are to be counted from D side as the 1st one.

Type 45(N)P: Flat Ribbon Cable (26 pins)

A flat cable connector used for electric wiring reduces labor during wiring operation. Connectors conforming to MIL are used for interchangeability.

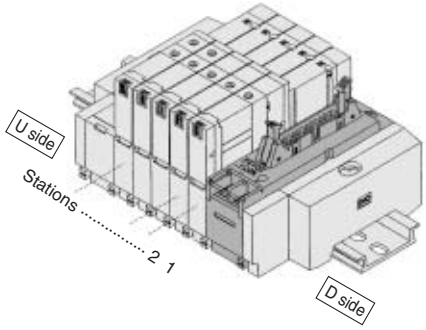

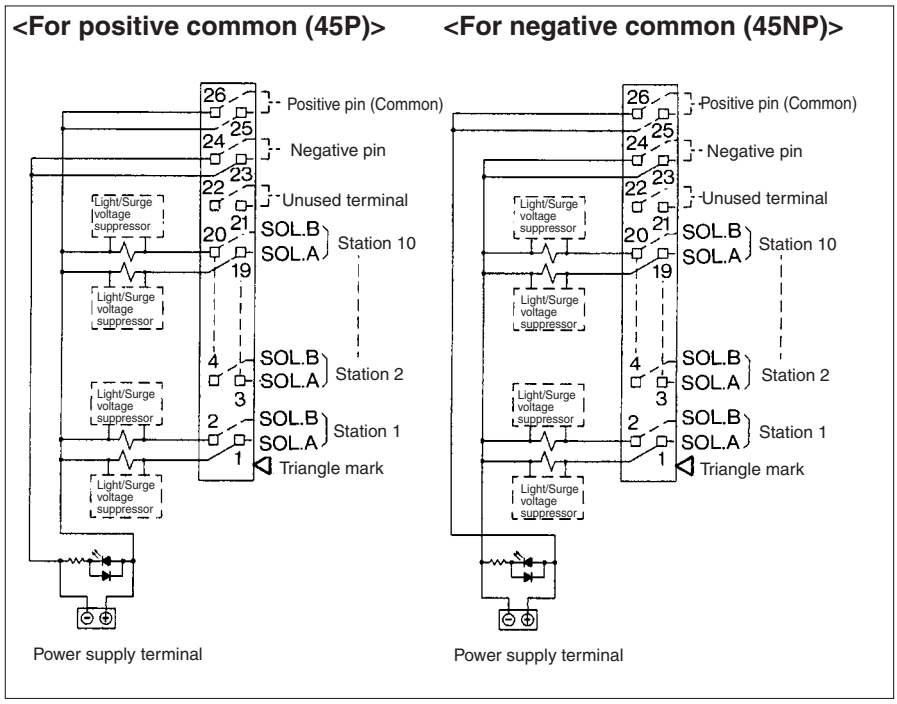

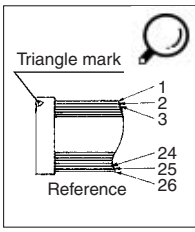

Note)
Terminal no. is not indicated on the connector. The terminal no. indicated in the connection schematic of connector, as shown in the reference, means a correlation of 1, 2, 3····26 from the triangle mark side on the flat ribbon cable of connector.

- The power source terminal is used for connecting to an external power source.
- The above diagram is the double wiring specifications for up to 10 stations. When the wiring specifications are specified on the manifold specification sheet, the valve assignment for the connector number will differ from the above diagram. For more information, please contact SMC.
- When using a single solenoid valve, connect wire to SOL.A.
- The maximum number of stations is 20 in terms of manifold bases, as well as solenoids. (Please consult with SMC for more stations.)
- Regardless of the connector mounting position, stations are to be counted from D side as the 1st one.

Type 45(N)PG: Flat Ribbon Cable (20 pins)

A flat cable connector used for electric wiring reduces labor during wiring operation. Connectors conforming to MIL are used for interchangeability.

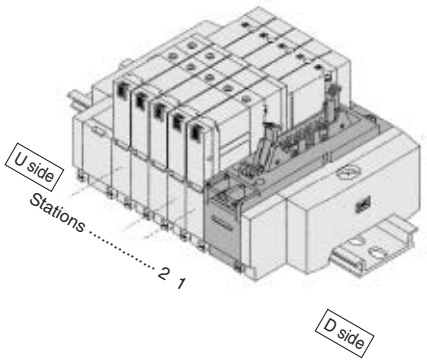

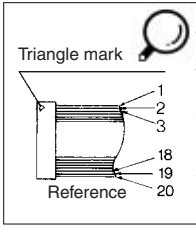

Note)
Terminal no. is not indicated on the connector. The terminal no. indicated in the connection schematic of connector as shown in the reference, means a correlation of 1, 2, 3····20 from the triangle mark side on the flat ribbon cable of connector.

<For positive common (45PG)> <For negative common (45NPG)>

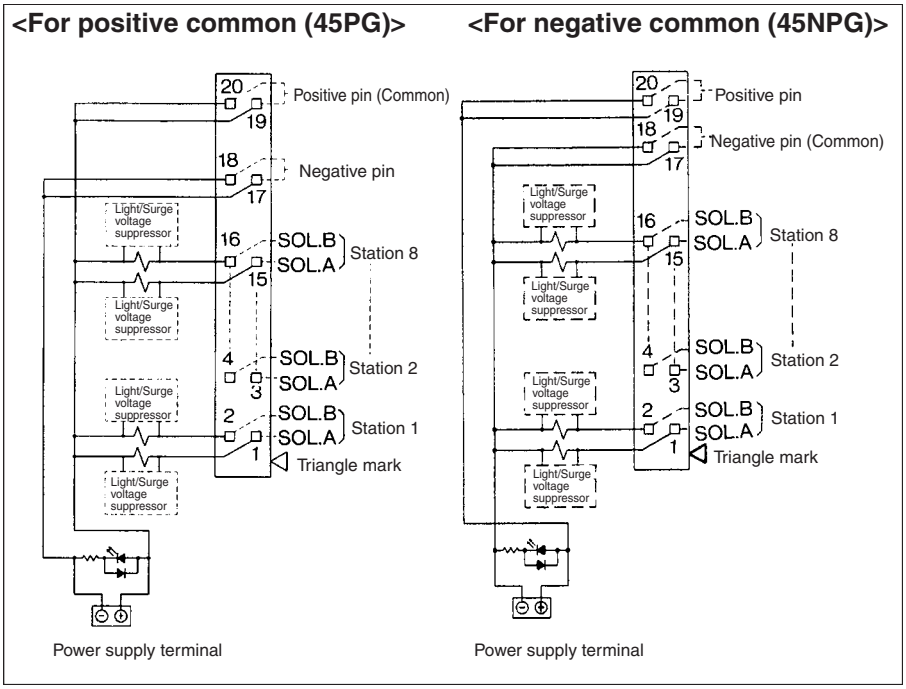

- The power source terminal is used for connecting to an external power source.
- The above diagram is the double wiring specifications for up to 8 stations. When the wiring specifications are specified on the manifold specification sheet, the valve assignment for the connector number will differ from the above diagram. For more information, please contact SMC.
- When using a single solenoid valve, connect wire to SOL.A.
- The maximum number of stations is 16 in terms of manifold bases, as well as solenoids. (Please consult with SMC for more stations.)
- Regardless of the connector mounting position, stations are to be counted from D side as the 1st one.

Type 45(N)PH: Flat Ribbon Cable (10 pins)

A flat cable connector used for electric wiring reduces labor during wiring operation. Connectors conforming to MIL are used for interchangeability.

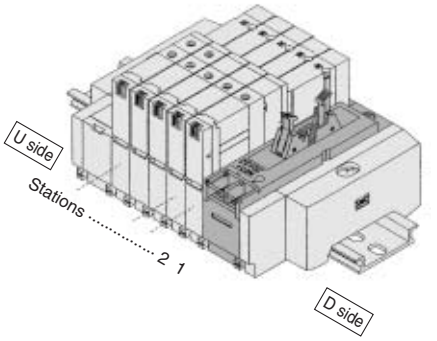

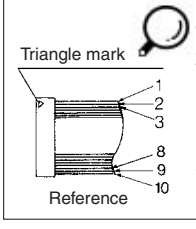

Note)
Terminal no. is not indicated on the connector. The terminal no. indicated in the connection schematic of connector as show in the reference, means a correlation of 1, 2, 3····10 from the triangle mark side on the flat ribbon cable of connector.

<For positive common (45PH)> <For negative common (45NPH)>

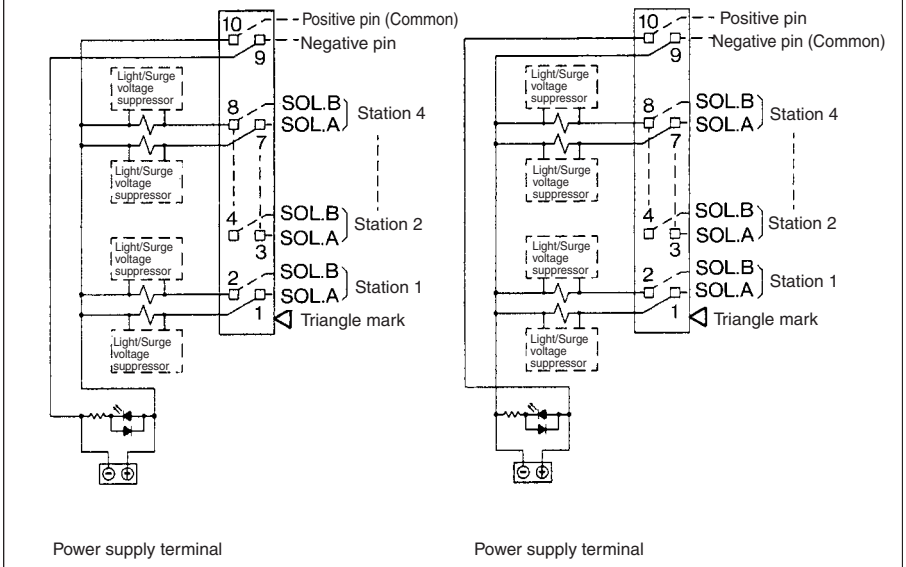

- The power source terminal is used for connecting to an external power source.
- The above diagram is the double wiring specifications for up to 4 stations. When the wiring specifications are specified on the manifold specification sheet, the valve assignment for the connector number will differ from the above diagram. For more information, please contact SMC.
- When using a single solenoid valve, connect wire to SOL.A.
- The maximum number of stations is 8 in terms of manifold bases, as well as solenoids. (Please consult with SMC for more stations.)
- Regardless of the connector mounting position, stations are to be counted from D side as the 1st one.

Internal Wiring of Manifold

Type 45T: Terminal Block

A terminal block style permits direct cable connection without treatment of lead wires.

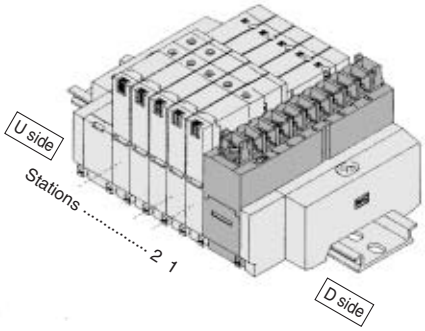

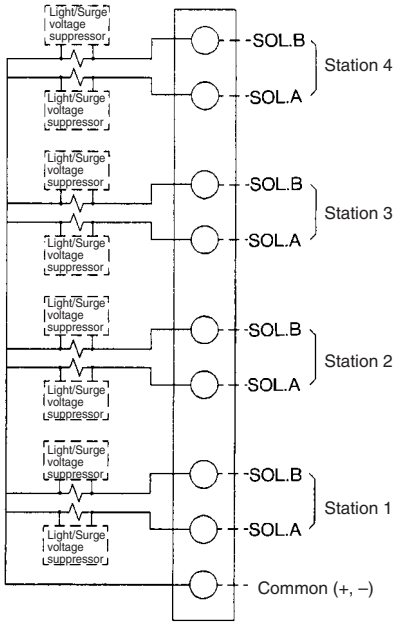

- The maximum number of stations is 8 in terms of manifold bases, as well as solenoids. (Please consult with SMC for more stations.)
- The above diagram is the double wiring specifications for up to 4 stations. When the wiring specifications are specified on the manifold specification sheet, the valve assignment for the connector number will differ from the above diagram. For more information, please contact SMC.
- When using a single solenoid valve, connect wire to SOL.A.
- Regardless of the connector mounting position, stations are to be counted from D side as the 1st one.
- There is no polarity in the COM wiring. Supply positive power for +COM spec. and negative power for –COM spec.

Type 45T1: Terminal Block

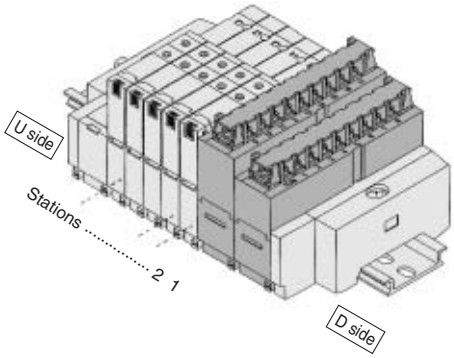

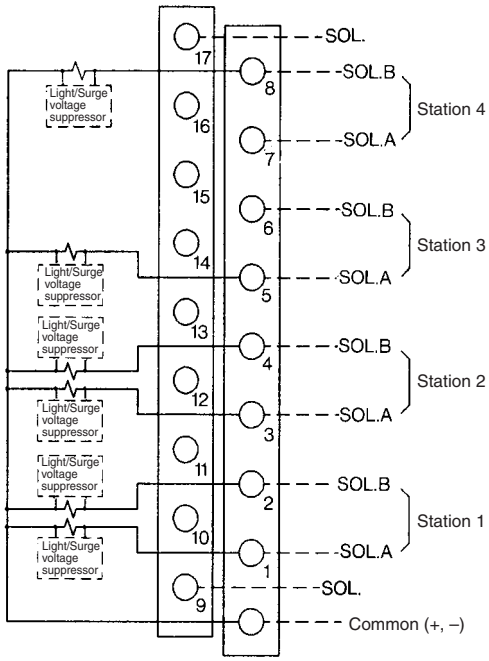

- The maximum number of stations is 17 in terms of manifold bases, as well as solenoids. (For more stations, please contact SMC.)
- Regardless of the connector mounting position, stations are to be counted from D side as the 1st one.
- There is no polarity in the COM wiring. Supply positive power for +COM spec. and negative power for –COM spec.

Internal Wiring of Manifold

Type 45G: Flat Ribbon Cable (PC Wiring System compatible)

It is the manifold for 20 pins flat ribbon cable connector which is compliant for PC wiring system.

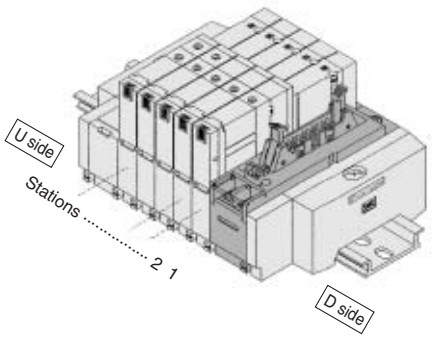

Electric circuit diagram (Below wiring is the case of all double solenoid connections.)

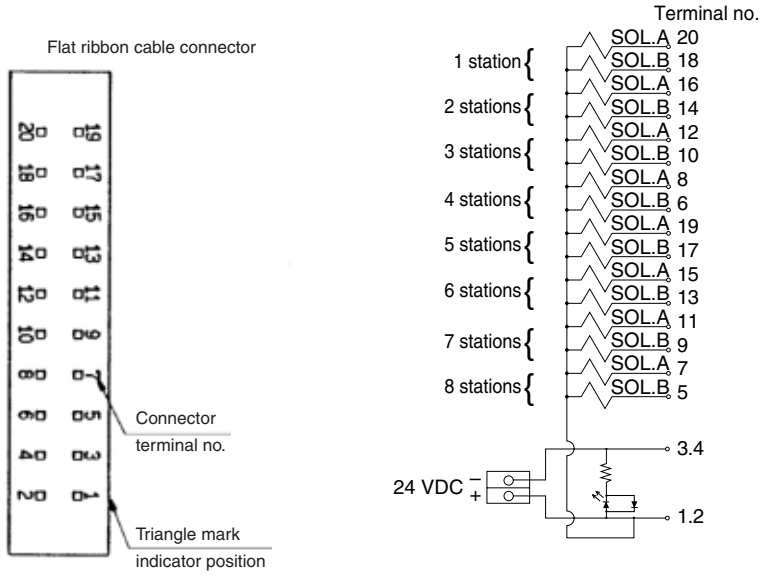

- The maximum number of stations is 16 in terms of manifold bases, as well as solenoids. (For more stations, please contact SMC.)
- Regardless of the connector mounting position, stations are to be counted from D side as the 1st one.

Refer to the separate catalog CAT.S02-20 for the details of PC Wiring System.

SS5X□-45□ Wiring of Plug-in Type

Power terminal is equipped with plug-in manifold of Series SX as standard.
Power terminal enables the power supply to valve from either of manifold or controller side.

1. Wiring example when using manifold power supply terminals

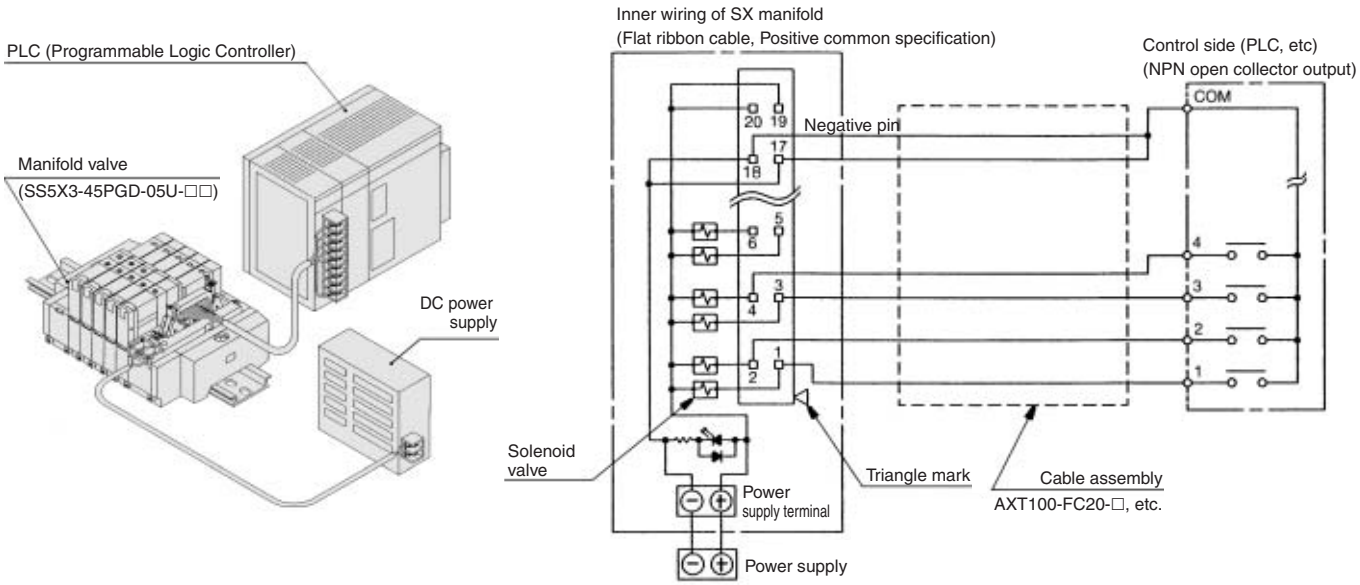

2. Wiring example when the power terminal of the manifold is not used (Power supplied at controller or in wiring)

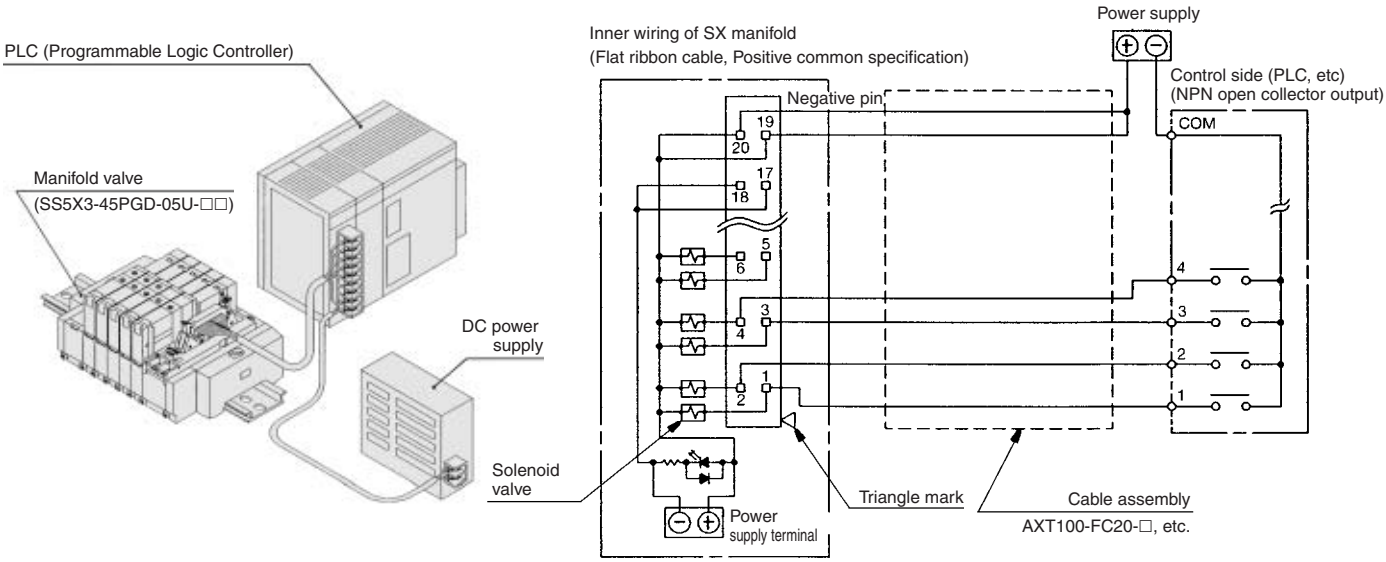

⚠ Caution

- Single wire, COM position, etc. of PLC are different from each manufacturer. When connecting with PLC, read the specifications carefully and understand the electrical circuit. Poor wiring could cause damage to PLC, power source, etc. as well as manifold and valve.

SX3000: D-sub Connector/Plug-in

SS5X3-45FU- Stations D-C4/C6

Note) The L1 to L4 dimensions of SS5X3-45FU-Stations U-□ are identical to those of SS5X3-45FU-Stations D-□.

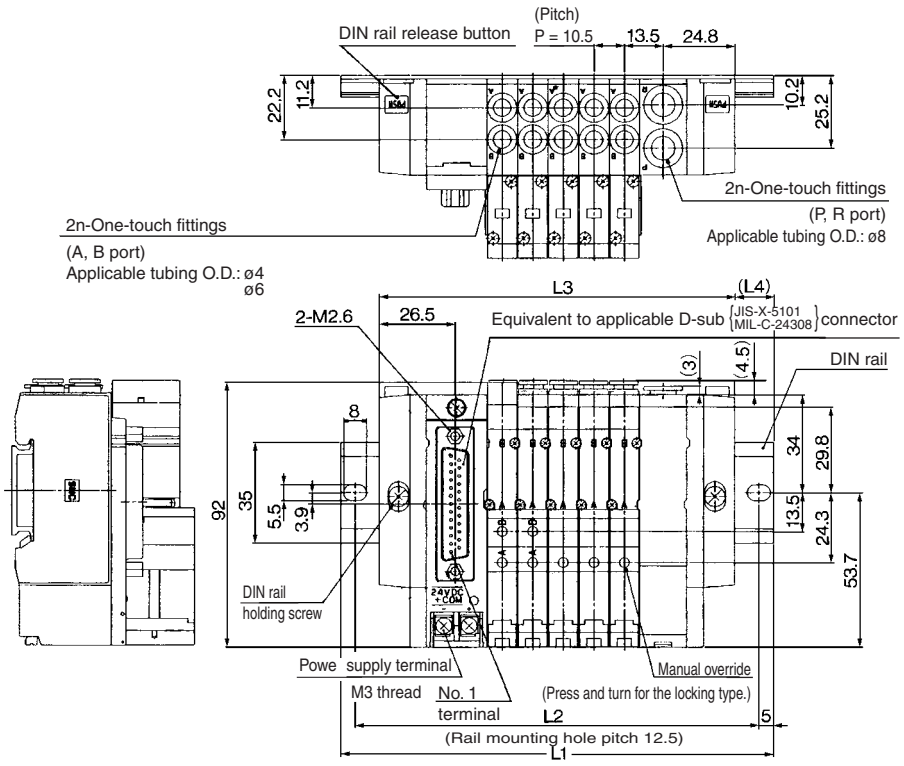

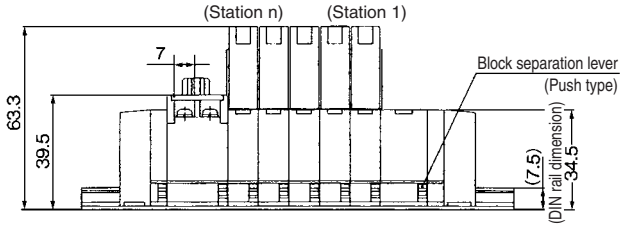

(mm)

Stations n	2 stations	3	4	5	6	7	8	9	10 stations
L1	123	135.5	148	148	160.5	173	185.5	198	210.5
L2	112.5	125	138.5	137.5	150	162.5	175	187.5	200
L3	91.5	102	112.5	123	133.5	144	154.5	165	175.5
L4	15.5	16.5	17.5	12.5	13.5	14.5	15.5	16.5	17.5

SS5X3-45FU- Stations B-C4/C6

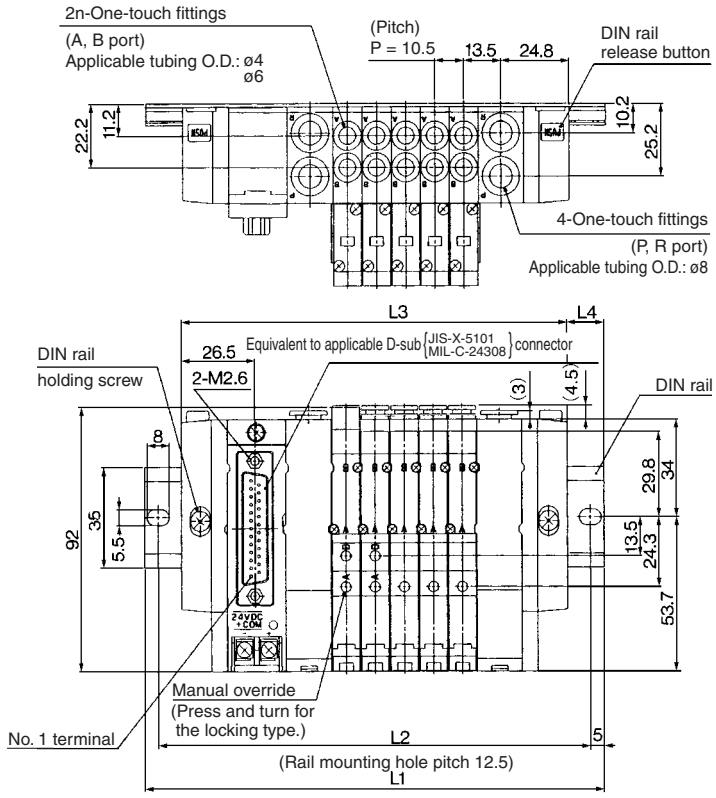

(mm)

Stations n	2 stations	3	4	5	6	7	8	9	10 stations
L1	135.5	148	160.5	173	185.5	185.5	198	210.5	223
L2	125	137.5	150	162.5	175	17.5	187.5	200	212.5
L3	108	118.5	129	139.5	150	160.5	171	181.5	192
L4	13.5	14.5	15.5	16.5	17.5	12.5	13.5	14.5	15.5

Stations n	11 stations	12	13	14	15	16	17	18	19	20 stations
L1	235.5	248	248	260.5	273	285.5	298	310.5	310.5	323
L2	225	237.5	237.5	250	262.5	27.5	287.5	300	300	312.5
L3	202.5	213	223.5	234	244.5	255	265.5	276	286.5	297
L4	16.5	17.5	12	13	14	15	16	17	12	13

SS5X3-45FD- Stations U-C4/C6

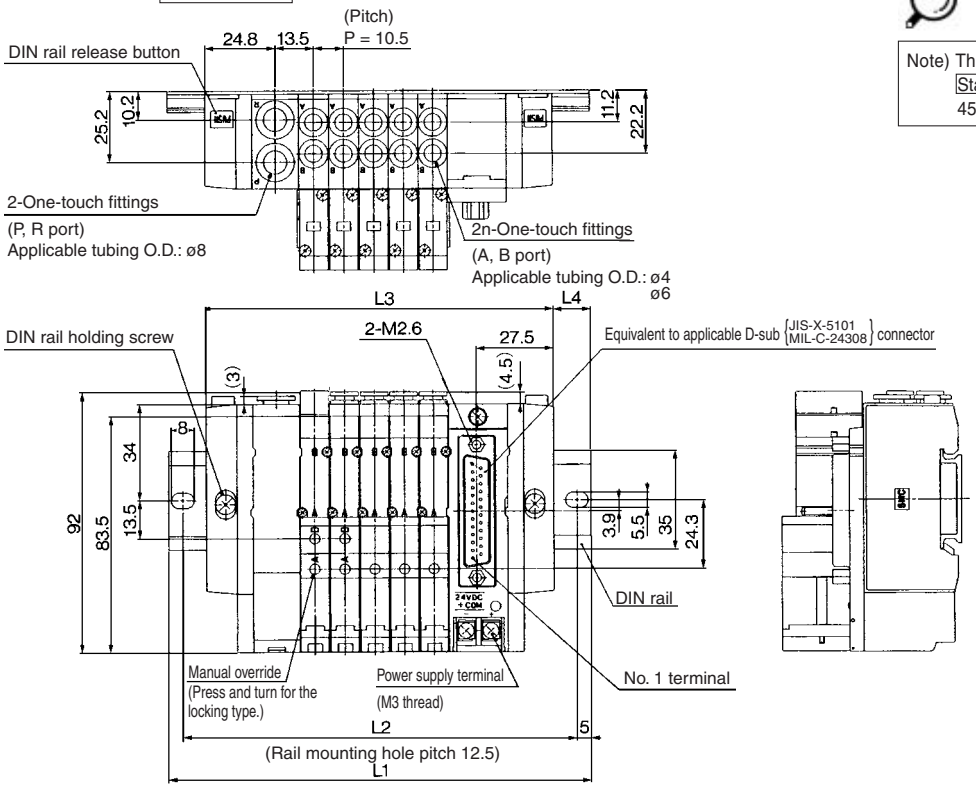

Note) The L1 to L4 dimensions of SS5X3-45FD-Stations D-□ are identical to those of SS5X3-45FD-Stations U-□.

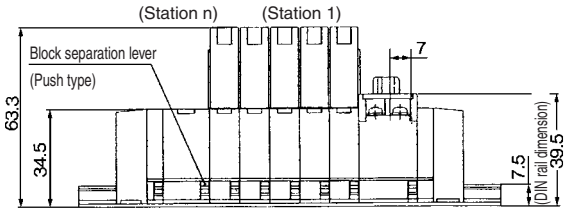

(mm)

Stations n	2 stations	3	4	5	6	7	8	9	10 stations
L1	123	135.5	148	148	160.5	173	185.5	198	210.5
L2	112.5	125	137.5	137.5	150	162.5	175	187.5	200
L3	91.5	102	112.5	123	133.5	144	154.5	165	175.5
L4	15.5	16.5	17.5	12.5	13.5	14.5	15.5	16.5	17.5

SS5X3-45FD- Stations B-C4/C6

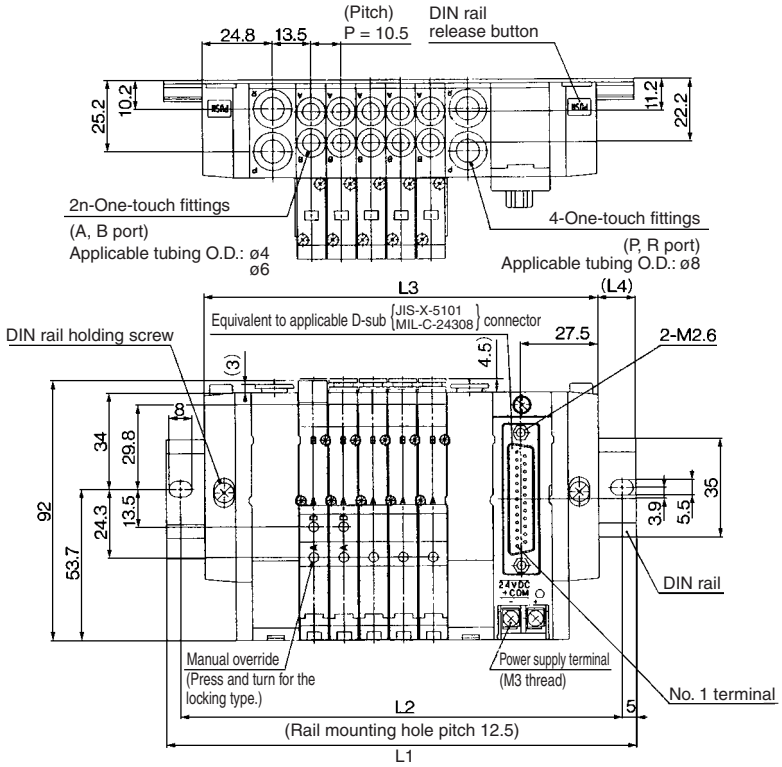

(mm)

Stations n	2 stations	3	4	5	6	7	8	9	10 stations
L1	135.5	148	160.5	173	185.5	185.5	198	210.5	223
L2	125	137.5	150	162.5	175	17.5	187.5	200	212.5
L3	108	118.5	129	139.5	150	160.5	171	181.5	192
L4	13.5	14.5	15.5	16.5	17.5	12.5	13.5	14.5	15.5

Stations n	11 stations	12	13	14	15	16	17	18	19	20 stations
L1	235.5	248	248	260.5	273	285.5	298	310.5	310.5	323
L2	225	237.5	237.5	250	262.5	27.5	287.5	300	300	312.5
L3	202.5	213	223.5	234	244.5	255	265.5	276	286.5	297
L4	16.5	17.5	12	13	14	15	16	17	12	13

SX3000: Flat Ribbon Cable Type/Plug-in

SS5X3-45PU- Stations D-C4/C6 (26 pins)

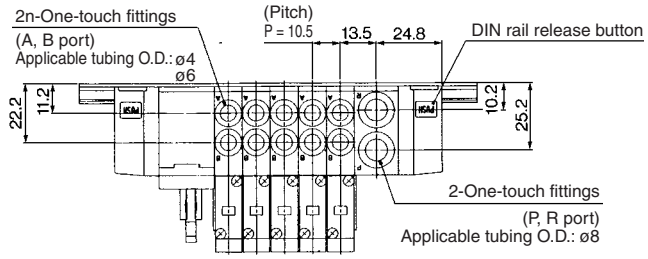

Note) The L1 to L4 dimensions of SS5X3-45P□U-Stations U-□ are identical to those of SS5X3-45PU-Stations D-□.

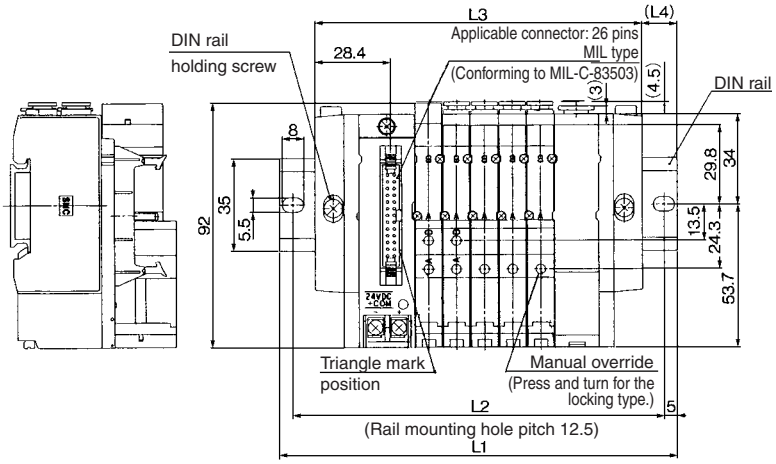

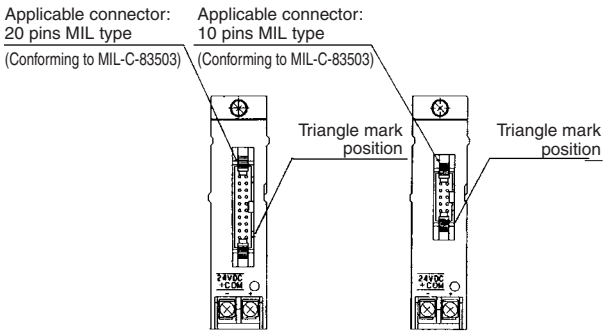

45PG (20 pins) 45PH (10 pins)

Note) Types 45PG and 45PH differ only in their connectors, and the L1 through L4 dimensions are the same as type 45P.

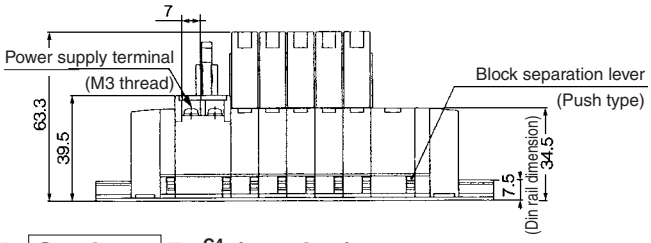

(mm)

Stations n	2 stations	3	4	5	6	7	8	9	10 stations
L1	123	135.5	148	148	160.5	173	185.5	198	210.5
L2	112.5	125	137.5	137.5	150	162.5	175	187.5	200
L3	91.5	102	112.5	123	133.5	144	154.5	165	175.5
L4	15.5	16.5	17.5	12.5	13.5	14.5	15.5	16.5	17.5

SS5X3-45PU- Stations B-C4/C6 (26 pins)

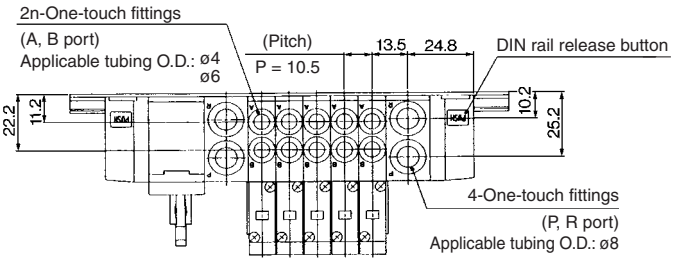

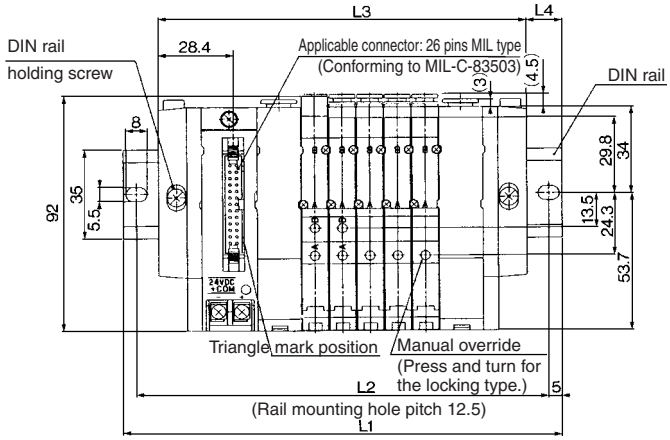

(mm)

Stations n	2 stations	3	4	5	6	7	8	9	10 stations
L1	135.5	148	160.5	173	185.5	185.5	198	210.5	223
L2	125	137.5	150	162.5	175	17.5	187.5	200	212.5
L3	108	118.5	129	139.5	150	160.5	171	181.5	192
L4	13.5	14.5	15.5	16.5	17.5	12.5	13.5	14.5	15.5

Stations n	11 stations	12	13	14	15	16	17	18	19	20 stations
L1	235.5	248	248	260.5	273	285.5	298	310.5	310.5	323
L2	225	237.5	237.5	250	262.5	27.5	287.5	300	300	312.5
L3	202.5	213	223.5	234	244.5	255	265.5	276	286.5	297
L4	16.5	17.5	12	13	14	15	16	17	12	13

SS5X3-45PD- Stations U- C4/C6 (26 pins)

Note) The L1 to L4 dimensions of SS5X3-45P□D- Stations D-□ are identical to those of SS5X3-45PD- Stations U-□.

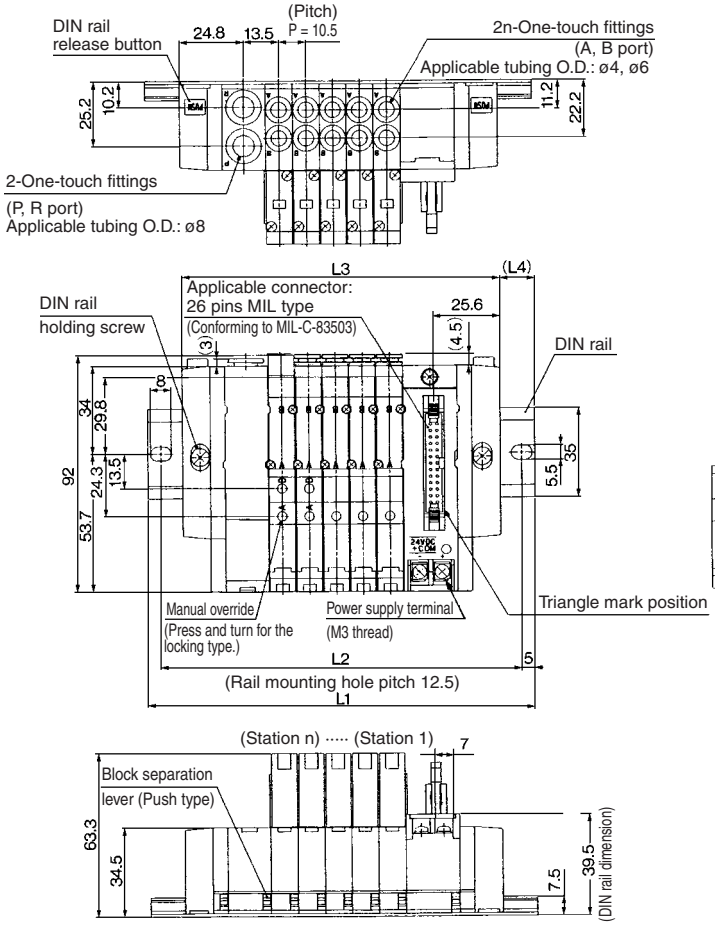

(mm)

Stations n	2 stations	3	4	5	6	7	8	9	10 stations
L1	123	135.5	148	148	160.5	173	185.5	198	210.5
L2	112.5	125	137.5	137.5	150	162.5	175	187.5	200
L3	91.5	102	112.5	123	133.5	144	154.5	165	175.5
L4	15.5	16.5	17.5	12.5	13.5	14.5	15.5	16.5	17.5

SS5X3-45PD- Stations B- C4/C6 (26 pins)

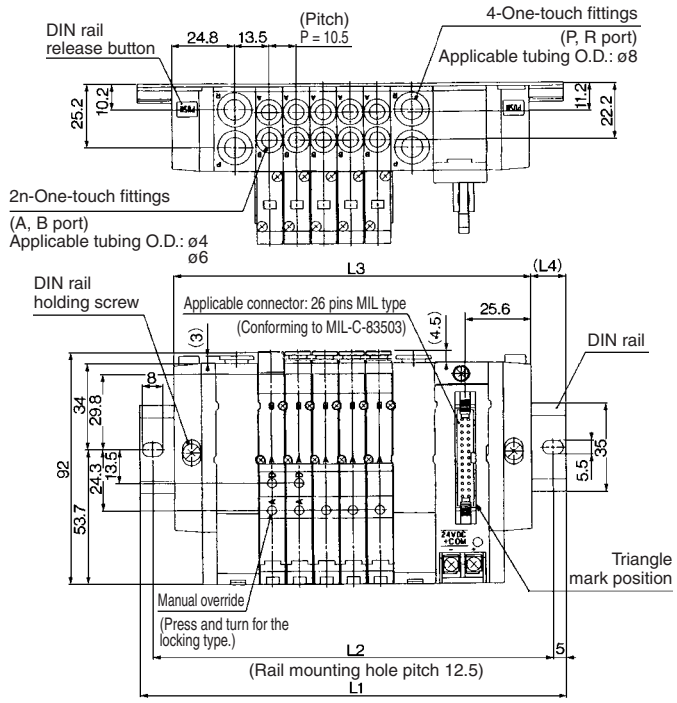

(mm)

Stations n	2 stations	3	4	5	6	7	8	9	10 stations
L1	135.5	148	160.5	173	185.5	185.5	198	210.5	223
L2	125	137.5	150	162.5	175	175	187.5	200	212.5
L3	108	118.5	129	139.5	150	160.5	171	181.5	192
L4	13.5	14.5	15.5	16.5	17.5	12.5	13.5	14.5	15.5

Stations n	11 stations	12	13	14	15	16	17	18	19	20 stations
L1	235.5	248	248	260.5	273	285.5	298	310.5	310.5	323
L2	225	237.5	237.5	250	262.5	27.5	287.5	300	300	312.5
L3	202.5	213	223.5	234	244.5	255	265.5	276	286.5	297
L4	16.5	17.5	12	13	14	15	16	17	12	13

SX3000: 9 Pins Terminal Block/Plug-in

SS5X3-45TU- Stations D-C4/C6

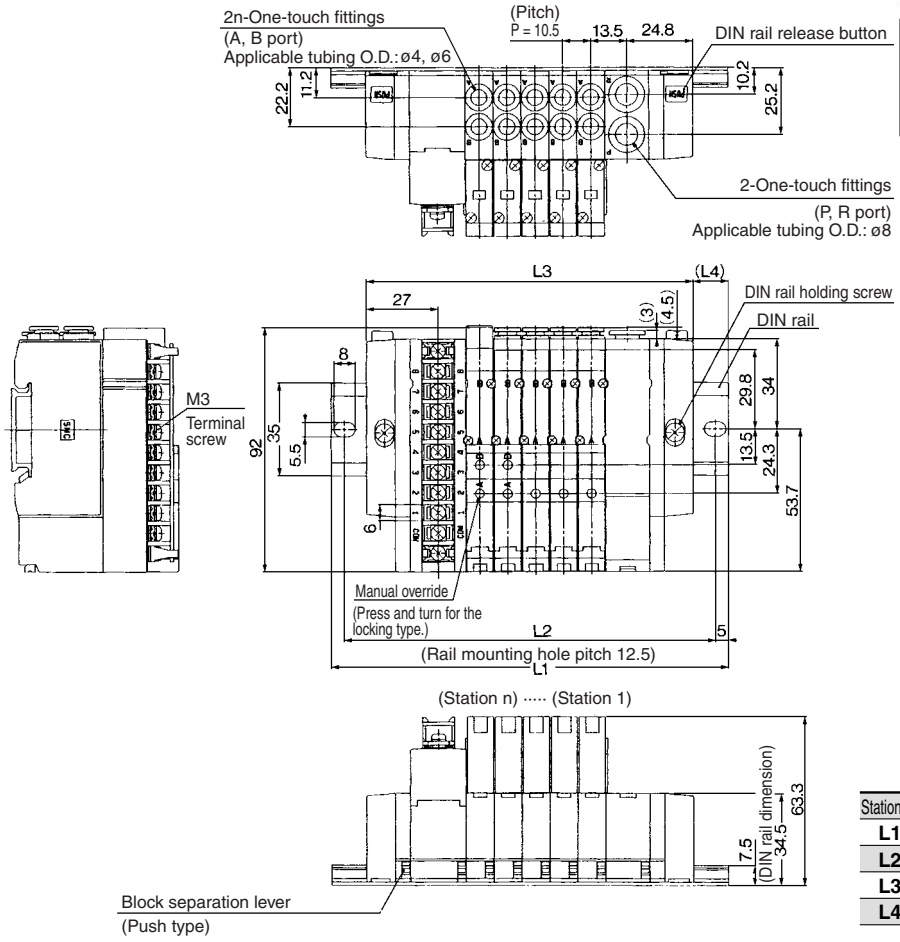

Note) The L1 to L4 dimensions of SS5X3-45TU- Stations U-□, SS5X3-45TD- Stations U-□, SS5X3-45TD- Stations D-□ are identical to those of SS5X3-45TU- Stations D-□.

(mm)

Stations n	2 stations	3	4	5	6	7	8 stations
L1	123	135.5	148	148	160.5	173	185.5
L2	112.5	125	137.5	137.5	150	162.5	175
L3	91.5	102	112.5	123	133.5	144	154.5
L4	15.5	16.5	17.5	12.5	13.5	14.5	15.5

SS5X3-45TU- Stations B-C4/C6

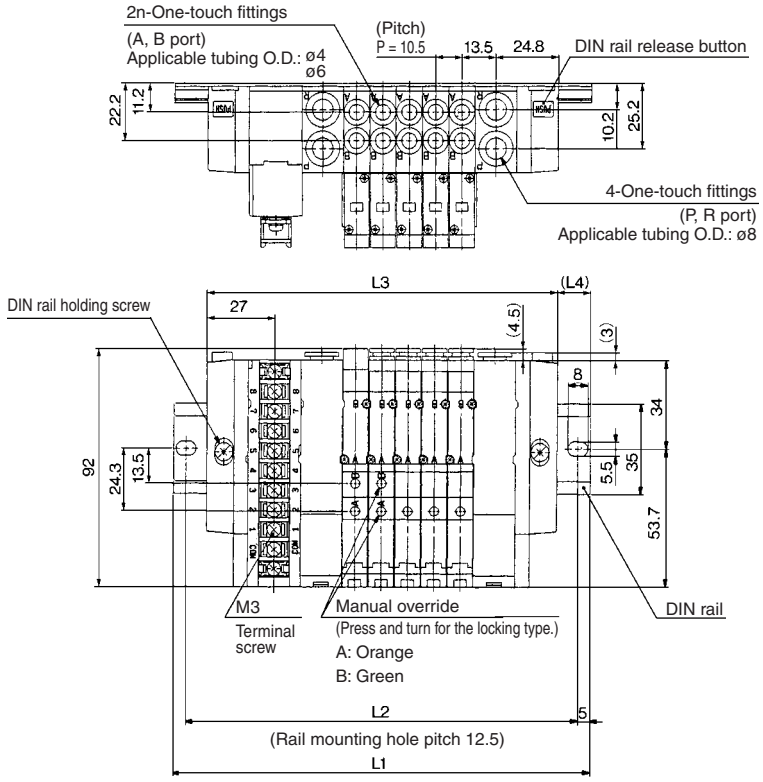

Note) The L1 to L4 dimensions of SS5X3-45TD- Stations B-□ are identical to those of SS5X3-45TU- Stations B-□.

(mm)

Stations n	2 stations	3	4	5	6	7	8 stations
L1	135.5	148	160.5	173	185.5	185.5	198
L2	125	137.5	150	162.5	175	175	187.5
L3	108	118.5	129	139.5	150	160.5	171
L4	13.5	14.5	15.5	16.5	17.5	12.5	13.5

SX3000: 18 Pins Terminal Block/Plug-in

SS5X3-45T1U- Stations D- C4/C6 (18 pins)

Note) The L1 to L4 dimensions of SS5X3-45T1U- Stations U-□ are identical to those of SS5X3-45T1U- Stations D-□.

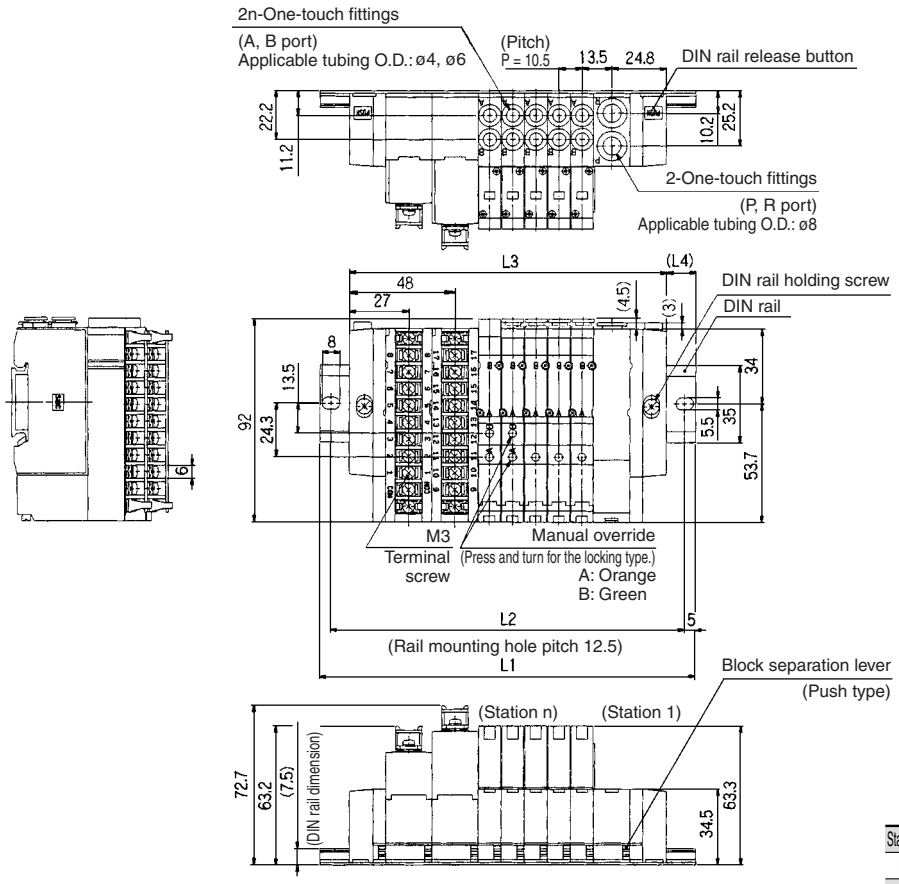

(mm)

Stations n	2 stations	3	4	5	6	7	8	9	10 stations
L1	148	148	160.5	173	185.5	198	210.5	210.5	223
L2	137.5	137.5	150	162.5	175	187.5	200	200	212.5
L3	112.5	123	133.5	144	154.5	165	175.5	186	196.5
L4	17.5	12.5	13.5	14.5	15.5	16.5	17.5	12	13

SS5X3-45T1U- Stations B- C4/C6 (18 pins)

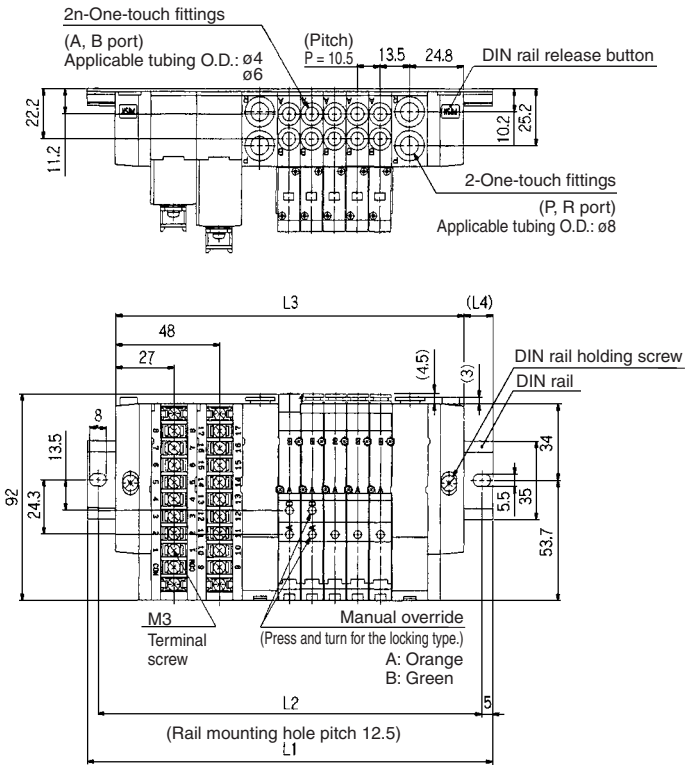

(mm)

Stations n	2 stations	3	4	5	6	7	8	9 stations
L1	160.5	173	185.5	185.5	198	210.5	223	235.5
L2	150	162.5	175	175	187.5	200	212.5	225
L3	129	139.5	150	160.5	171	181.5	192	202.5
L4	15.5	16.5	17.5	12.5	13.5	14.5	15.5	16.5

Stations n	10 stations	11	12	13	14	15	16	17 stations
L1	248	248	248	260.5	273	285.5	298	310.5
L2	237.5	237.5	237.5	250	262.5	27.5	287.5	300
L3	213	223.5	223.5	234	244.5	255	265.5	286.5
L4	17.5	12	12	13	14	15	16	12

SS5X3-45T1D- Stations U- C4/C6 (18 pins)

Note) The L1 to L4 dimensions of SS5X3-45T1D- Stations D-□ are identical to those of SS5X3-45T1D- Stations U-□.

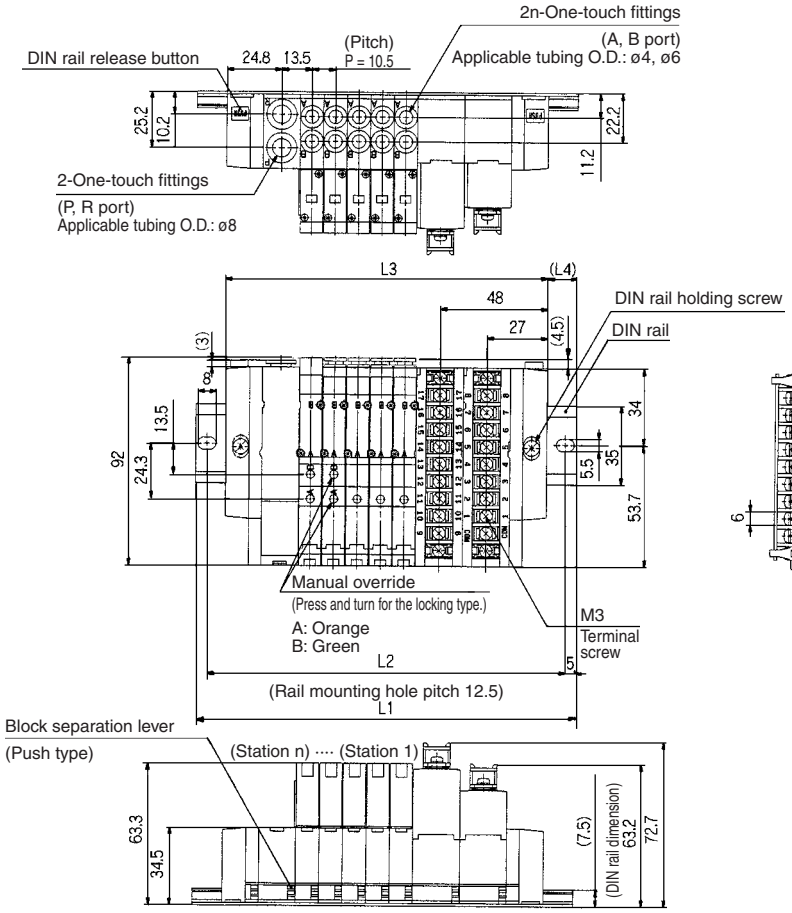

(mm)

Stations n	2 stations	3	4	5	6	7	8	9	10 stations
L1	148	148	160.5	173	185.5	198	210.5	210.5	223
L2	137.5	137.5	150	162.5	175	187.5	200	200	212.5
L3	112.5	123	133.5	144	154.5	165	175.5	186	196.5
L4	17.5	12.5	13.5	14.5	15.5	16.5	17.5	12	13

SS5X3-45T1D- Stations B- C4/C6 (18 pins)

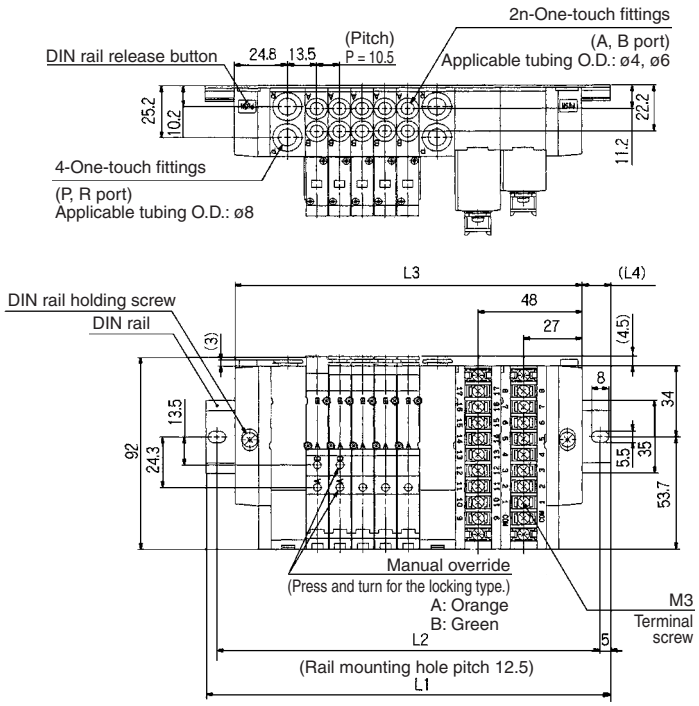

(mm)

Stations n	2 stations	3	4	5	6	7	8	9 stations
L1	160.5	173	185.5	185.5	198	210.5	223	235.5
L2	150	162.5	175	175	187.5	200	212.5	225
L3	129	139.5	150	160.5	171	181.5	192	202.5
L4	15.5	16.5	17.5	12.5	13.5	14.5	15.5	16.5

Stations n	10 stations	11	12	13	14	15	16	17 stations
L1	248	248	260.5	273	285.5	298	310.5	310.5
L2	237.5	237.5	250	262.5	275	287.5	300	300
L3	213	223.5	234	244.5	255	265.5	276	286.5
L4	17.5	12	13	14	15	16	17	12

SX3000: PC Wiring System Compatible (Flat ribbon cable type/Plug-in)

SS5X3-45GU- Stations D-C4/C6

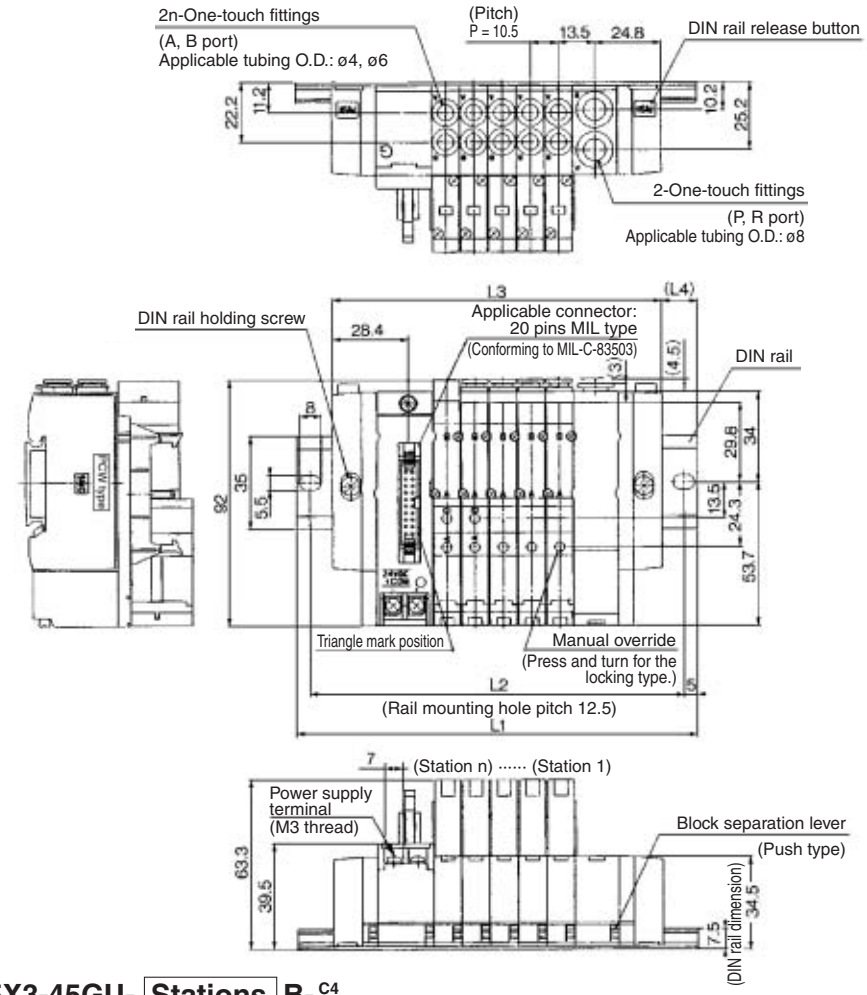

Note) The L1 to L4 dimensions of SS5X3-45GU-Stations U-□ are identical to those of SS5X3-45GU-Stations D-□.

(mm)

Stations	2 stations	3	4	5	6	7	8	9	10 stations
L1	123	135.5	148	148	160.5	173	185.5	198	210.5
L2	112.5	125	137.5	137.5	150	162.5	175	187.5	200
L3	91.5	102	112.5	123	133.5	144	154.5	165	175.5
L4	15.5	16.5	17.5	12.5	13.5	14.5	15.5	16.5	17.5

SS5X3-45GU- Stations B-C4/C6

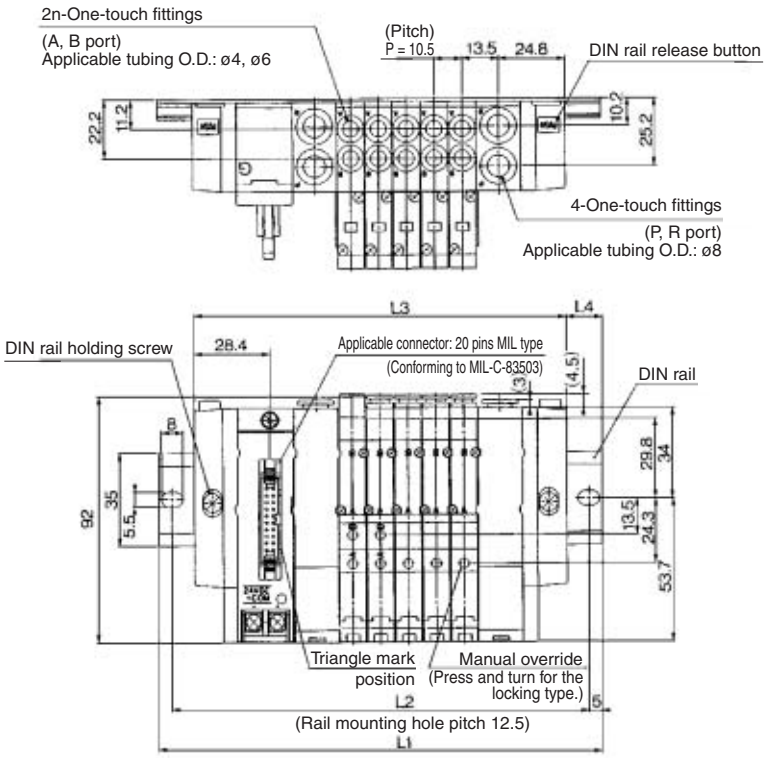

(mm)

Stations	2 stations	3	4	5	6	7	8	9	10 stations
L1	135.5	148	160.5	173	185.5	185.5	198	210.5	223
L2	125	137.5	150	162.5	175	175	187.5	200	212.5
L3	108	118.5	129	139.5	150	160.5	171	181.5	192
L4	13.5	14.5	15.5	16.5	17.5	12.5	13.5	14.5	15.5

Stations	11 stations	12	13	14	15	16 stations
L1	235.5	248	248	260.5	273	285.5
L2	225	237.5	237.5	250	262.5	275
L3	202.5	213	223.5	234	244.5	255
L4	16.5	17.5	12	13	14	15

SS5X3-45GD- Stations U-C4/C6

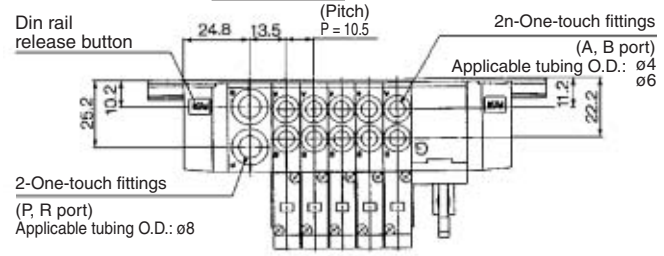

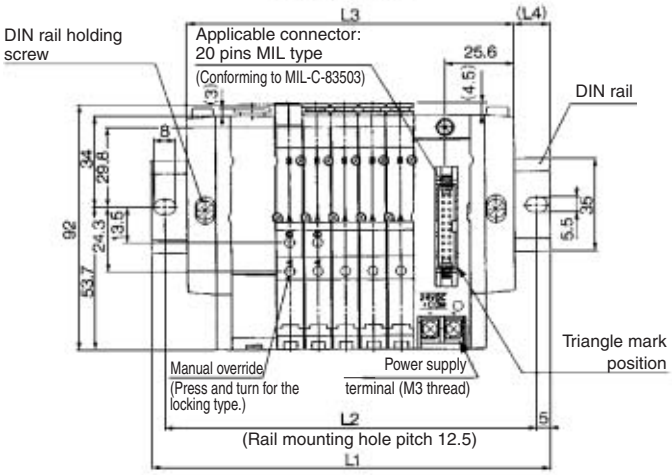

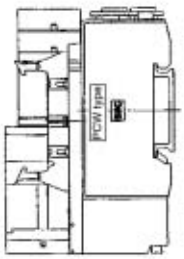

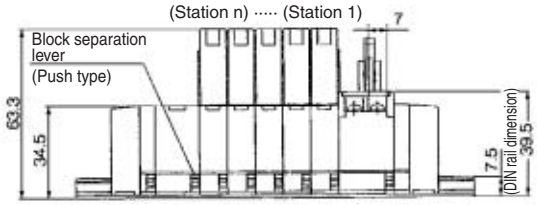

Note) The L1 to L4 dimensions of SS5X3-45GD- Stations D-□ are identical to those of SS5X3-45GD- Stations U-□.

(mm)

Stations	2 stations	3	4	5	6	7	8	9	10 stations
L1	123	135.5	148	148	160.5	173	185.5	198	210.5
L2	112.5	125	137.5	137.5	150	162.5	175	187.5	200
L3	91.5	102	112.5	123	133.5	144	154.5	165	175.5
L4	15.5	16.5	17.5	12.5	13.5	14.5	15.5	16.5	17.5

SS5X3-45GD- Stations B-C4/C6

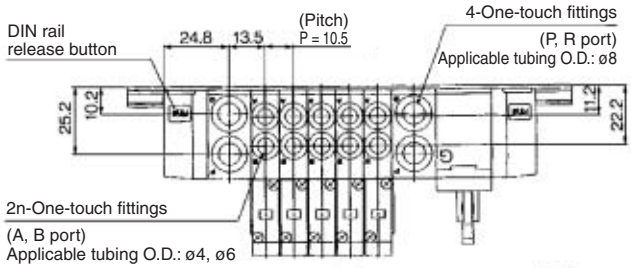

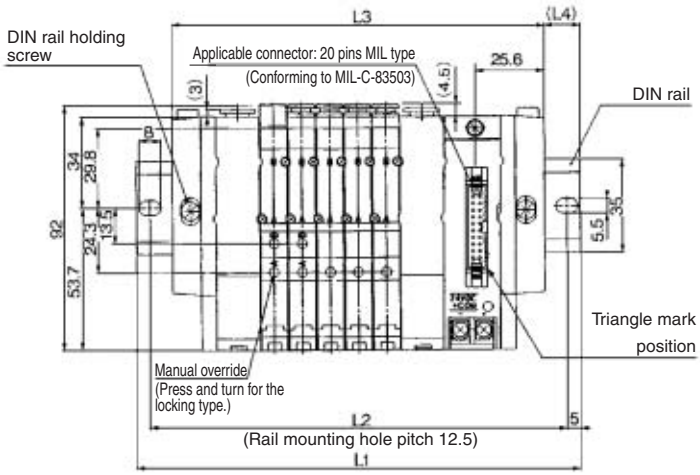

(mm)

Stations	2 stations	3	4	5	6	7	8	9	10 stations
L1	135.5	148	160.5	173	185.5	185.5	198	210.5	223
L2	125	137.5	150	162.5	175	175	187.5	200	212.5
L3	108	118.5	129	139.5	150	160.5	171	181.5	192
L4	13.5	14.5	15.5	16.5	17.5	12.5	13.5	14.5	15.5

Stations	11 stations	12	13	14	15	16 stations
L1	235.5	248	248	260.5	273	285.5
L2	225	237.5	237.5	250	262.5	275
L3	202.5	213	223.5	234	244.5	255
L4	16.5	17.5	12	13	14	15

Exploded View: DIN Rail Manifold

Type 45F (D-sub connector type) Manifold

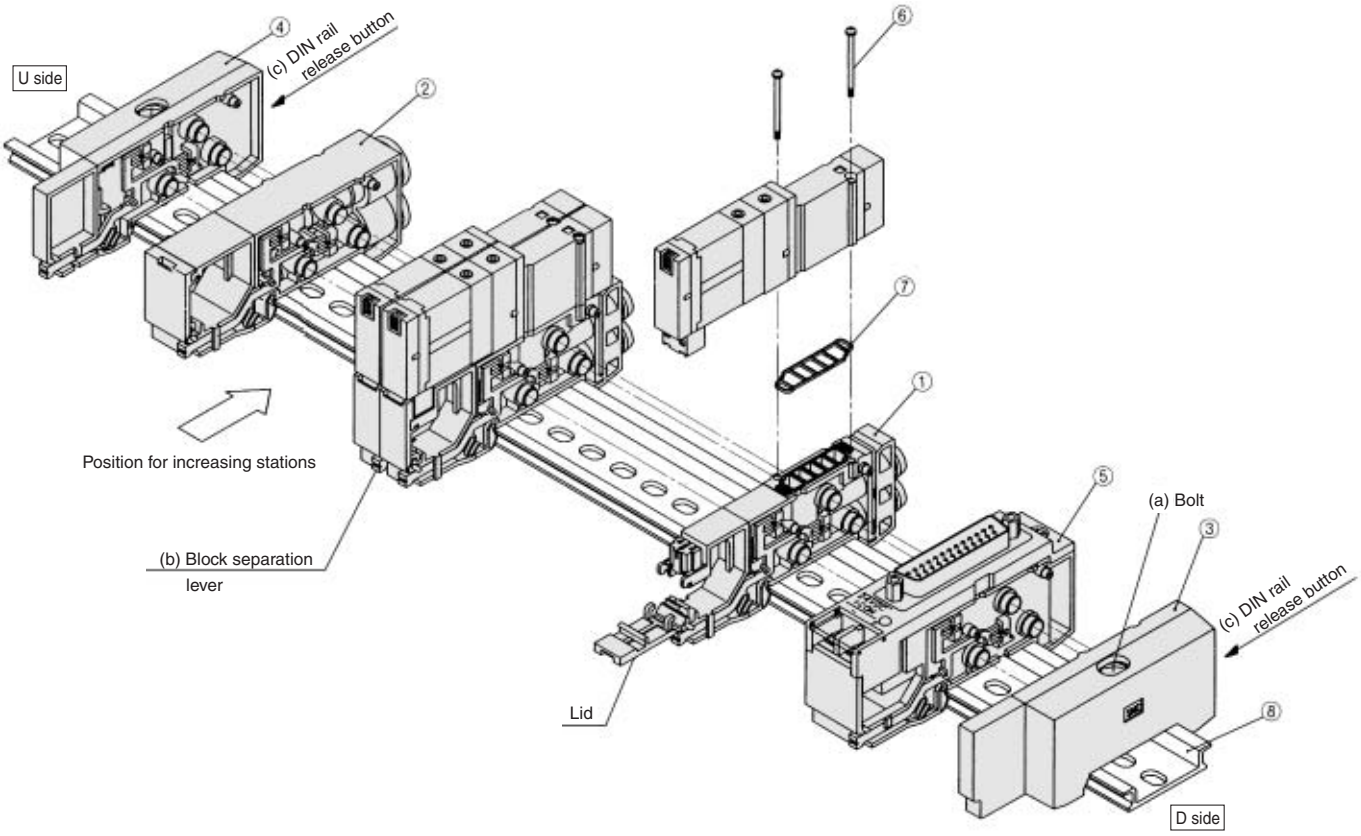

Replacement Parts

No.	Description	Part no. SX3000	Part no. SX5000	Note	
①	Manifold block assembly	Manifold block assembly number differs according to an attached lead wire assembly based on the connector specification (Single, Double). Select an appropriate part number from among the manifold block assembly numbers shown below.			
②	SUP/EXH block assembly	(Metric size) SX3000-51-2A (Inch size) SX3000-51-16A	(Metric size) SX5000-51-2A (Inch size) SX5000-51-16A	R, P port SX3000 (Metric size): With One-touch fittings for ø8 (Inch size): With One-touch fittings for ø5/16" R, P port SX5000 (Metric size): With One-touch fittings for ø10 (Inch size): With One-touch fittings for ø3/18"	
③	End block assembly	SX3000-52-2A	SX5000-52-2A	For D side	
④	End block assembly	SX3000-53-2A	SX5000-53-2A	For U side	
⑤-1	Connector block assembly (For D-sub connector)	SX3000-64-$^{1A}_{1NA}$	SX5000-64-$^{1A}_{1NA}$	-1A: +COM -1NA: –COM	Note) 24 VDC
⑤-2	Connector block assembly (For 26 pins flat cable)	SX3000-64-$^{2A}_{2NA}$-26	SX5000-64-$^{2A}_{2NA}$-26	-2A: +COM. -2NA: –COM.	
⑤-3	Connector block assembly (For 20 pins flat cable)	SX3000-64-$^{2A}_{2NA}$-20	SX5000-64-$^{2A}_{2NA}$-20		
⑤-4	Connector block assembly (For 10 pins flat cable)	SX3000-64-$^{2A}_{2NA}$-10	SX5000-64-$^{2A}_{2NA}$-10		
⑤-5	Connector block assembly (For 2 to 8 stations (T, T1) terminal block)	SX3000-64-3A	SX5000-64-3A	In common between +COM and –COM.	
⑤-6	Connector block assembly (For 9 to 17 stations (T1) terminal block)	SX3000-64-8A	SX5000-64-8A		
⑥	Round head combination screw	SX3000-22-2 (M2 x 24)	M3 x 30 (Matt nickel plated)		
⑦	Gasket	SX3000-57-4	SX5000-57-6		
⑧	DIN rail	VZ1000-11-1-□		Refer to page 1-6-77.	

Note) The numbers ⑤–1 to 4 are for 24 VDC. For 12 VDC, suffix -12V to the parts no.
(Example) SX3000-64-1A-12V

Manifold Block Assembly Part No.

Style of manifold	Wiring specifications	Manifold block assembly part no.	Note
For 45(N)F (D-sub connector)	Double	SX$^{3}_{5}$000-50-2A-□□	□□: • SX3000 (Metric size) (Inch size) C4: With One-touch fitting for ø4 N3: With One-touch fitting for ø5/32" C6: With One-touch fitting for ø6 N7: With One-touch fitting for ø1/4" X5000 (Metric size) (Inch size) C4: With One-touch fitting for ø4 N3: With One-touch fitting for ø5/32" C6: With One-touch fitting for ø6 N7: With One-touch fitting for ø1/4" C8: With One-touch fitting for ø8 N9: With One-touch fitting for ø5/16" (Gasket ⑦ supplied as an accessory.)
	Single	SX$^{3}_{5}$000-50-3A-□□	
For 45(N) $^{P}_{PG}$ $^{}_{PH}$ (Flat ribbon cable)	Double	SX$^{3}_{5}$000-50-4A-□□	
	Single	SX$^{3}_{5}$000-50-5A-□□	
For 45 $^{T}_{T1}$ (Terminal block)	Double	SX$^{3}_{5}$000-50-6A-□□	
	Single	SX$^{3}_{5}$000-50-7A-□□	

How to Increase Manifold Bases

(1) Loosen bolt (a) fixing the manifold base until it begins to turn idly. (While pressing DIN rail release button (c), separate the manifold base from the DIN rail.)

(2) Additional bases are to be added to the U side. Press splitting button (b) of the manifold block assembly on the U side until button (b) locks, and then separate the block assemblies.

(3) Separate the connector block assembly in the same manner as 2, and remove the connector mounting screw shown in Fig. (1).

(4) Loosen the valve mounting screw on the U side, remove the valve, and take out the receptacle housing. (Refer to Fig. (2).)

(5) Insert the common wire (red) of the manifold block assembly to be added into the pin insertion section (N mark) of the receptacle housing that was taken out in 4, mount it on the manifold block, and mount the removed valve.

(6) As shown in Fig. (3), mount the additional manifold block assembly on the DIN rail on the U side. Refer to the circuit diagram, and insert the lead wire (SOL.A: Black, SOL.B: White) as shown in Fig. (4).

(7) Press the blocks against each other until a click sound is produced, place the lead wire in the manifold block, and close the lid without pinching the lead wire.

(8) While lightly holding the blocks together so that there are no gaps between them, secure them to the DIN rail by tightening the screws A. (Tightening torque: 1.4 N·m)

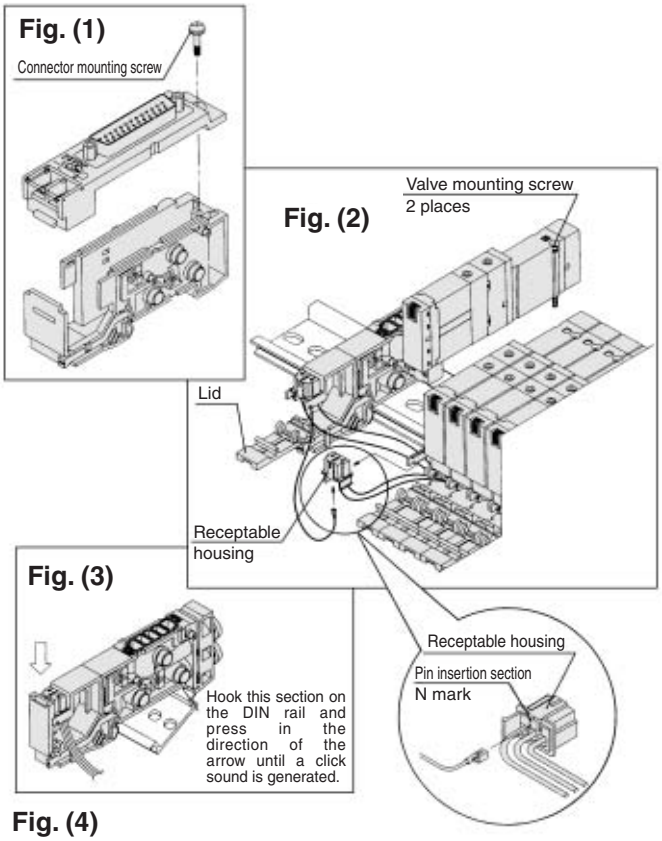

⚠ Caution

1. Depending on the connector, there is a limit to the number of solenoids. When all manifold stations are wired for double solenoid valves, expansion of the manifold may not be possible. Please consult with SMC for more information.
2. The manifold block assembly mounting position for additional manifold bases is always on the U side, because wires are connected to respective connectors sequentially from the D side.
3. When bolt (a) for the end block is not sufficiently tightened during reassembly, air leakage may result. Before supplying air, check that there is no gap between blocks and that the manifold block is firmly fixed to the DIN rail in order to ensure air supply without leakage.

Fig. (4)

D-sub connector (45F) **Flat ribbon cable (45P□)** **Terminal block (45T)**

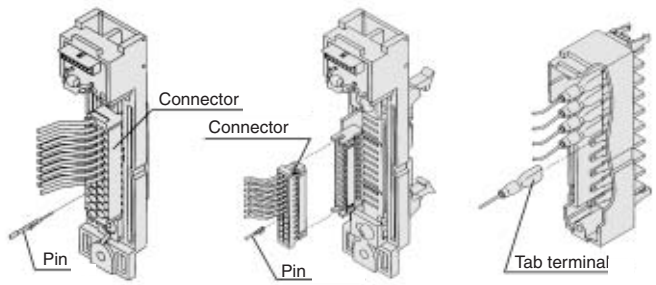

Note) After inserting pins, pull lead wires lightly to check that the pins are locked.

Note) Insert pins after removing the connector from the main unit. After inserting pins, pull lead wires lightly to check that the pins are locked.

Note) Insert tab terminals completely.

How to Change Fitting Assembly

Type 45 manifold permits change in the A and B port sizes by changing the manifold block fitting assembly.
After removing the valve, remove the clip with a screwdriver. To mount a new fitting assembly insert it and then insert a clip so it does not come out of the manifold block.

Fitting Assembly Part No.

Metric size

SX3000	One-touch fitting for ø4	VVQ1000-50A-C4
	One-touch fitting for ø6	VVQ1000-50A-C6
SX5000	One-touch fitting for ø4	VVQ1000-51A-C4
	One-touch fitting for ø6	VVQ1000-51A-C6
	One-touch fitting for ø8	VVQ1000-51A-C8

Inch size

SX3000	One-touch fitting for ø5/32"	VVQ1000-50A-N3
	One-touch fitting for ø1/4"	VVQ1000-50A-N7
SX5000	One-touch fitting for ø5/32"	VVQ1000-51A-N3
	One-touch fitting for ø1/4"	VVQ1000-51A-N7
	One-touch fitting for ø5/16"	VVQ1000-51A-N9

Note 1) P and R ports cannot be changed.
Note 2) Use caution that O-rings must be free from scratches and dust. Otherwise, air leakage may result.

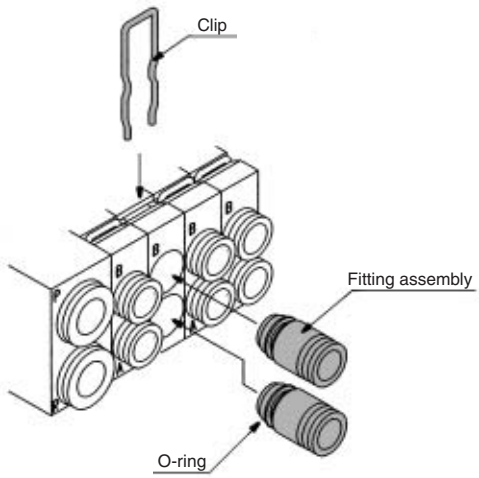

Type 45S□

Series ***SX3000/5000***

Base Mounted Manifold
Stacking Type DIN Rail Mounted

Serial Transmission Type (Integrated)

How to Order Manifold

SS5X 3 – 45S A – 05 U – 05 –

Series

3	SX3000
5	SX5000

SI unit

Symbol	Specifications
O	Without SI unit
A	With general type SI unit (Series EX300)
B	Mitsubishi Electric Corp.: MELSECNET/MINI-S3 Data Link System
C	OMRON Corp.: SYSBUS Wire System
D	SHARP Corp.: Satellite I/O Link System
E	Matsushita Electric Works: MEWNET-F System
F1	NKE Corp.: Uni-wire System (16 output points)
G	Rockwell Automation: Allen Bradley Remote I/O (RIO) System
H	NKE Corp.: Uni-wire H System
J1	SUNX Corp.: S-LINK System (16 output points)
J2	SUNX Corp.: S-LINK System (8 output points)
K	Fuji Electric Co.: T-LINK Mini System
Q	DeviceNet, CompoBus/D (OMRON Corp.)
R1	OMRON Corp.: CompoBus/S System (16 output points)
R2	OMRON Corp.: CompoBus/S System (8 output points)
U	JEMANET (JPCN-1)
V	Mitsubishi Electric Corp.: CC-LINK System

- For the general purpose type, a transmission unit is required on the CPU side.
- Even though when it is not equipped with SI unit, DIN rail length is long enough for future expectancy of mounting SI unit.

Valve stations

Symbol	Stations	Note
02	2 stations	Double wiring specifications
⋮	⋮	
08	8 stations	
02	2 stations	Applicable up to 16 solenoids. Use the manifold specification sheet to specify the wiring specifications.
⋮	⋮	
16	16 stations	

- This also includes the number of blanking plate assemblies.
- When special wiring is required on manifold with 2 to 8 stations, please use the manifold specification sheet.

SUP/EXH block assembly mounting position

Symbol	Mounting position	Stations
U	U side	2 to 10 stations
D	D side	2 to 10 stations
B	Both sides	2 to 16 stations
M	Special specifications	

∗ For special specifications, indicate separately by the manifold specification sheet.

Option

When a longer DIN rail is desired than the specified stations, specify the station number to be required. (20 stations maximum)

A, B port size

(Metric size)

Symbol	Port size	Applicable series
C4	One-touch fitting for ø4	SX3000
C6	One-touch fitting for ø6	
M	Mixed	
C4	One-touch fitting for ø4	SX5000
C6	One-touch fitting for ø6	
C8	One-touch fitting for ø8	
M	Mixed	

(Inch size)

Symbol	Port size	Applicable series
N3	One-touch fitting for ø5/32"	SX3000
N7	One-touch fitting for ø1/4"	
M	Mixed	
N3	One-touch fitting for ø5/32"	SX5000
N7	One-touch fitting for ø1/4"	
N9	One-touch fitting for ø5/16"	
M	Mixed	

∗ In the case of mixed specifications (M), indicate separately on the manifold specification sheet.

How to Order Valve Manifold Assembly

Ordering example

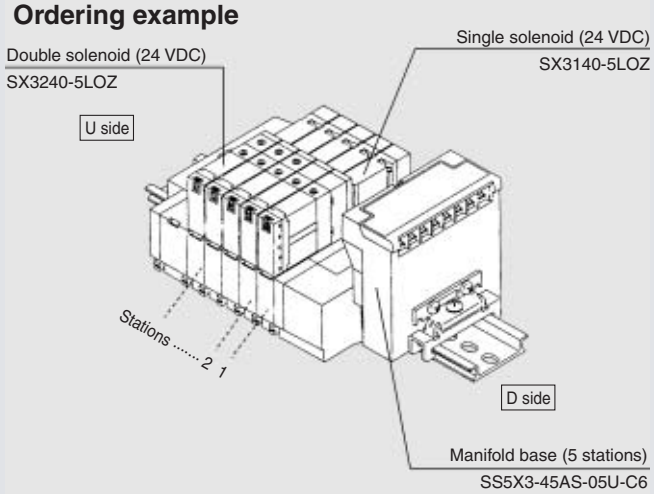

SS5X3-45SA-05U-C6····1 set (45S with serial 5-station manifold base no.)
∗SX3140-5LOZ·····2 sets (Single solenoid part no.)
∗SX3240-5LOZ·····3 sets (Double solenoid part no.)

∗ The asterisk denotes the symbol for assembly. Prefix it to the part nos. of the solenoid valve, etc.

- They will be assembled in the order listed starting at the first station at the D side whether the connector box is located at either end. When ordering with the double wiring specification, specify it in order, beginning with the 1 station on the D side.
- For manifolds with more than 8 stations (9 to 16), special wiring is required. Please use the manifold specification sheet.
- Serial unit can be mounted on D side only.

How to Order Valves

SX 3 2 40 – 5 LOZ □

Series

3	SX3000
5	SX5000

Type of actuation

1	2 position single
2	2 position double
3	3 position closed center
4	3 position exhaust center
5	3 position pressure center

Rated voltage

5	24 VDC

Manual override

Nil	Non-locking push type
D	Push-turn locking slotted type

SI Unit Part No.

Symbol	Specifications	For SS5X□-45S	Symbol	Specifications	For SS5X□-45S
A	With general type SI unit (Series EX300)	EX322-S001	J1	SUNX Corp.: S-LINK System (16 output points)	EX122-SSL1
B	Mitsubishi Electric Corp.: MELSECNET/MINI-S3 Data Link System	EX122-SMB1	J2	SUNX Corp.: S-LINK System (8 output points)	EX122-SSL2
C	OMRON Corp.: SYSBUS Wire System	EX122-STA1	K	Fuji Electric Co.: T-LINK Mini System	EX122-SFU1
D	SHARP Corp.: Satellite I/O Link System	EX122-SSH1	Q	DeviceNet, CompoBus/D (OMRON Corp.)	EX122-SDN1
E	Matsushita Electric Works: MEWNET-F System	EX122-SPA1	R1	OMRON Corp.: CompoBus/S System (16 output points)	EX122-SCS1
F1	NKE Corp.: Uni-wire System (16 output points)	EX122-SUW1	R2	OMRON Corp.: CompoBus/S System (8 output points)	EX122-SCS2
G	Rockwell Automation: Allen Bradley Remote I/O (RIO) System	EX122-SAB1	U	JEMANET (JPCN-1)	EX122-SJN1
H	NKE Corp.: Uni-wire H System	EX122-SUH1	V	Mitsubishi Electric Corp.: CC-LINK System	EX122-SMJ1

■ The serial transmission system reduces wiring work, while minimizing wiring and saving space.
■ Maximum 16 stations (Specify a model with more than 9 stations by means of the manifold specification sheet.)

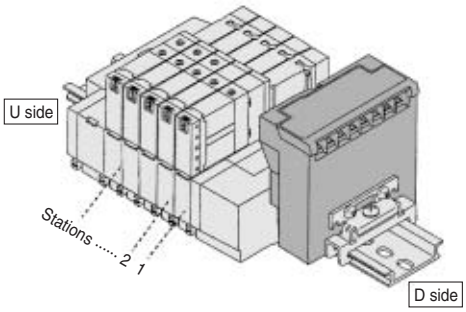

• Stations are counted from station 1 on the D side.
• Maximum station: Up to 16 solenoids (16 single solenoids).

Item	Specifications	
External power supply	24 VDC + 10%/– 5%	
Current consumption (Internal unit)	0.1 A	SA, SB, SD, SE, SF1, SG, SJ1, SJ2, SK, SR1, SR2
	0.3 A	SC, SQ

	Type SA Series EX300	Type SB Mitsubishi Electric Corporation MELSECNET/MINI-S3 Data Link System
Name of terminal block, LED	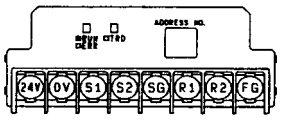 LED / Description TRD: Lighting during data reception RUN/ERR: Blinking when received data is normal; Lighting when data reception	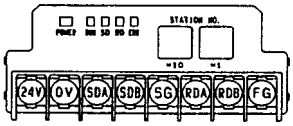 LED / Description POWER: Lighting when power is turned ON RUN: Lighting when data transmission with the master station is normal RD: Lighting during data reception SD: Lighting during data reception ERR.: Lighting when reception data error occurs Light turns off when the error is corrected
Note	• Serial transmission is possible by connecting with I/O card of T unit PLC manufacturer. EX300-TMB1·····for Mitsubishi Electric Corporation EX300-TTA1·····for OMRON Corporation EX300-TFU1·····for Fuji Electric Co., Ltd. EX300-T001·····General purpose ∗ Each T unit has 32 control points. • No. of output point, 16 points	• MELSECNET/MINI-S3 Data Link System Master unit: AJ71PT32-S3 AJ71T32-S3 A1SJ71PT32-S3 • No. of output point, 16 points No. of sta. occupied, 2 stations
Cable wiring	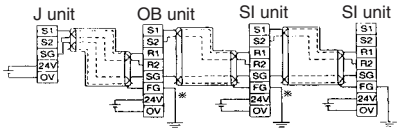 ∗ Ground either the reception side or the transmission side of the shielding wire shield.	SI manifold solenoid valve 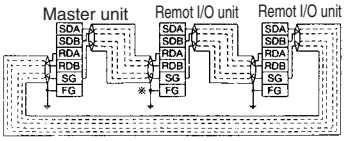 ∗ Ground either the reception side or the transmission side of the shielding wire shield.

	Type SC OMRON Corporation SYSBUS Wire System	Type SD SHARP Corporation Satellite I/O Link System	Type SE Matsushita Electric Works, Ltd. MEWNET-F System
Name of terminal block, LED	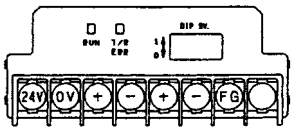 LED / Description RUN: ON when transmission is normal and PLC is in operation mode. T/R: Blinks during data transmission/reception ERR: ON when transmission is abnormal	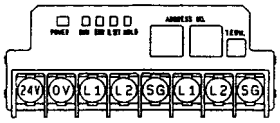 LED / Description POWER: ON when power supply is ON RUN: ON when power is ON and slave unit operates normally ERROR: ON for abnormal slave unit switch setting, abnormal communication, master unit PLC stopped and defective slave unit R.SET HOLD: ON for master unit control input	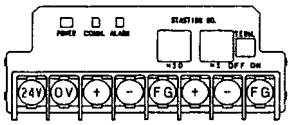 LED / Description POWER: ON when power supply is ON COMM: Blinks when transmission is normal ALARM: ON for unit abnormality, blinks for station no. setting error
Note	• SYSBUS Wire System Master unit: Type C500-RM201 C200H-RH201 • No. of output points, 16 points	• Satellite I/O Link System Master unit: ZW-31LM JW-31LM JW-23LM • No. of output points, 16 points	• MEWNET-F System Master unit: AFP3740 AFP5740 • No. of output points, 16 points
Cable wiring	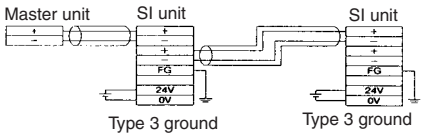 Master unit, SI unit, SI unit Type 3 ground, Type 3 ground	a) 2-wire type Wiring without signal ground line (SG) 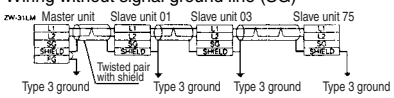 Master unit, Slave unit 01, Slave unit 03, Slave unit 75 Twisted pair with shield Type 3 ground, Type 3 ground, Type 3 ground, Type 3 ground b) 3-wire type Wiring with signal ground line (SG) 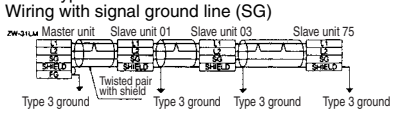 Master unit, Slave unit 01, Slave unit 03, Slave unit 75 Twisted pair with shield Type 3 ground, Type 3 ground, Type 3 ground, Type 3 ground	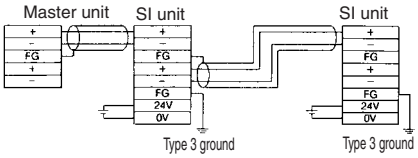 Master unit, SI unit, SI unit Type 3 ground, Type 3 ground

	Type SF1 NKE Corporation Uni-wire System	Type SG Rockwell Automation, Inc. Allen Bradley Remote I/O (RIO) System	Type SJ1, SJ2 SUNX Corporation S-LINK System
Name of terminal block, LED	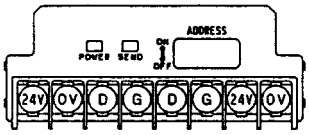 LED / Description POWER: Lighting when power is turned ON (ON when normal, flickers when voltage drops) SEND: Transmission indication: Blinks when normal, Blinks slowly when abnormal	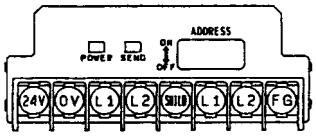 LED / Description POWER: ON when power supply is ON COM.: ON when communication is normal; Blinks when communication is initialized; OFF for abnormal communication ERROR: ON for abnormal communication	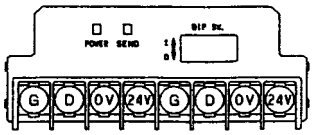 LED / Description POWER: Lighting when power is turned ON SEND: Transmission indication: Blinks when normal, Blinks slowly when abnormal
Note	• Wiring Simplifying System Send unit: SD-120 • No. of output points, 16 points	• Remote I/O (RIO) System • No. of output points, 16 points	• S-LINK System S-LINK Controller: SL-CU1 • No. of output points, 16 points (Type SJ1) No. of output points, 8 points (Type SJ2)
Cable wiring	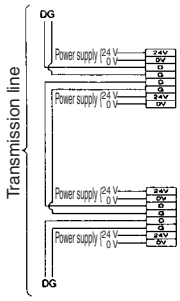	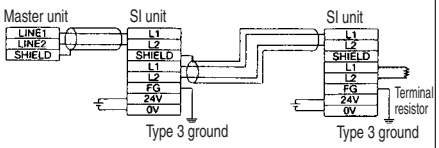	a) Type T branching multi-drop wiring (S-LINK System) b) Crossover wiring (Sensor Link System) 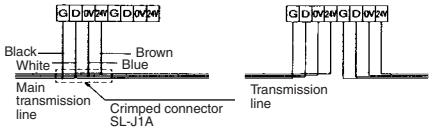 The above is the example of using dedicated S-LINK flat ribbon cable SL-RCM∗l00.

	Type SK Fuji Electric Co. Ltd. T-LINK Mini System	Type SQ DeviceNet	Type SR1, SR2 OMRON Corporation CompoBus/S System
Name of terminal block, LED	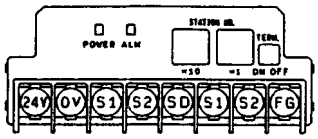 LED / Description POWER: Lighting when power is turned ON SEND: ON when communication power is supplied, OFF when power is OFF	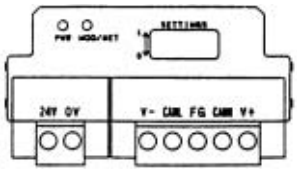 LED / Description POWER: Green light ON with circuit power input MOD/NET: It turns OFF when unit and circuit are not powered Green light ON continuously: When the unit is online and in operation Red light blinks when an abnormal transmission is generated in the unavailable circuit. Red light turns ON when an abnormal transmission is generated in the unavailable circuit or neither unit or circuit is available.	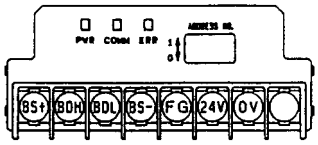 LED / Description POWER: Light ON with transmission power input, light Off without it COMM: ON for normal communication, OFF for abnormal communication or waiting ERR: ON for abnormal communication, OFF for normal communication or waiting
Note	• T-LINK Mini System Master unit: FTM100B Converter: FRC100A-G02 Repeater: FRC200A-C10 • No. of output points, 16 points	• DeviceNet • OMRON Corp's CompoBus/D System Master station unit: C200HW-DSM21 • No. of output points, 16 points	• CompoBus/S System Master station unit: C200HW-SRM21 Master station unit: CQM1-SRM21 • No. of output points, 16 points (Type SR1) • No. of output points, 8 points (Type SR2)
Cable wiring	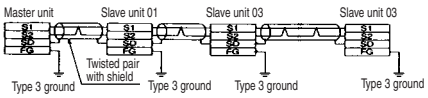 Connect the shielding wire to the SD terminal. If the shielding wire is not connected to the SD terminal, normal transmission will be impossible even for short distances. Furthermore, do not ground the shielding wire (SD).	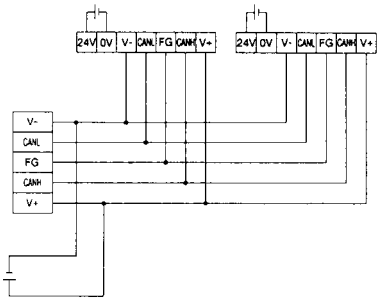	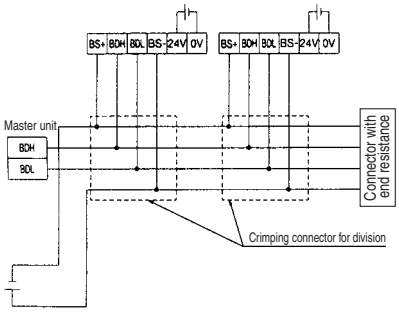

	Type SH NKE Corporation Uni-wire H System	Type SU JEMANET (JPCN-1)	Type SV Mitsubishi Electric Corporation CC-LINK System
Name of terminal block, LED	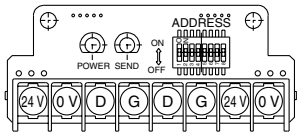	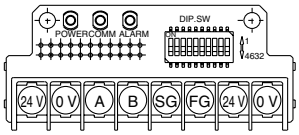	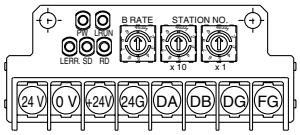
	LED / Description POWER: Lighting when power is turned ON (ON when normal, flickers when voltage drops) SEND: Transmission indication: Blinks when normal, Transmission indication: OFF or ON when abnormal	LED / Description POWER: ON for SI unit power supply input COMM: On for normal communication ALARM: ON for abnormal communication	LED / Description PWR: Light ON with transmission power input, light Off without it L RUN: ON when normal data is being received SD: ON when data is transmitted RD: ON when data is received L ERR.: ON for transmission error/wrong setting, Blinks when station or transmission speed setting changes during operation
Note	• Uni-wire H System Send unit: SD-H2 • No. of output points, 16 points	• JEMANET (JPCN-1) (Reference) AJ71J92-S3 (Mitsubishi Electric Corporation) A1SJ71J92-S3 (Mitsubishi Electric Corporation) Type C200HW-JRM21 (OMRON Corporation) NJ-JPCN-1 (Fuji Electric Co., Ltd.) NP1L-JP1 (Fuji Electric Co., Ltd.) • No. of output points, 16 points	• CC-LINK System Master unit: AJ61BT11 A1SJ61BT11 AJ61QBT11 A1SJ61QBT11 • No. of output points, 16 points
Cable wiring	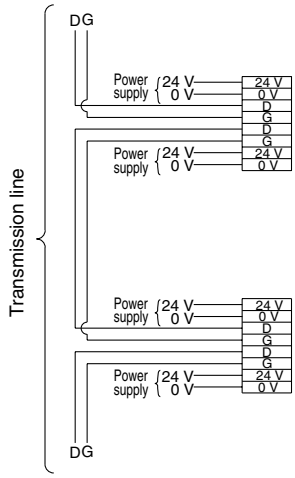	a) 2-wire type 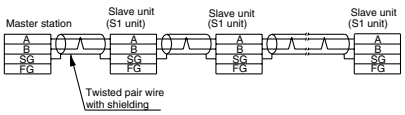 b) 3-wire type 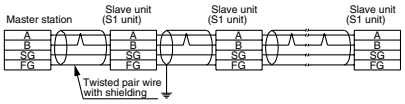	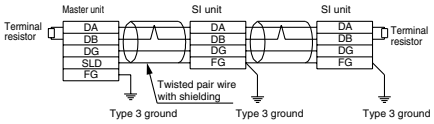

SX3000: Serial Transmission Unit/Plug-in

SS5X3-45S□- Stations U- C4 C6

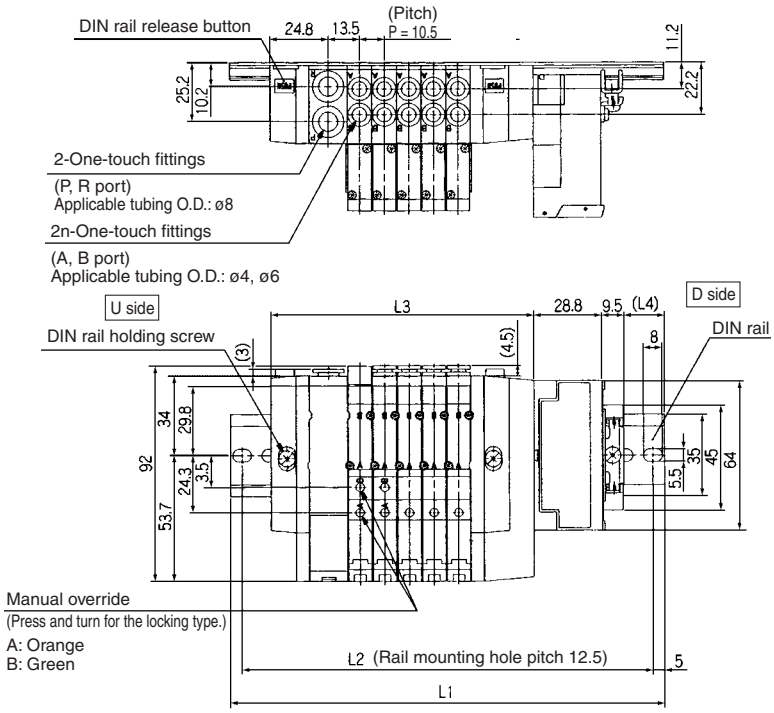

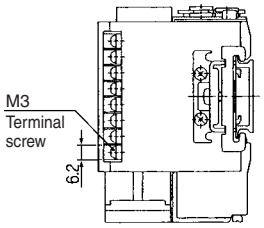

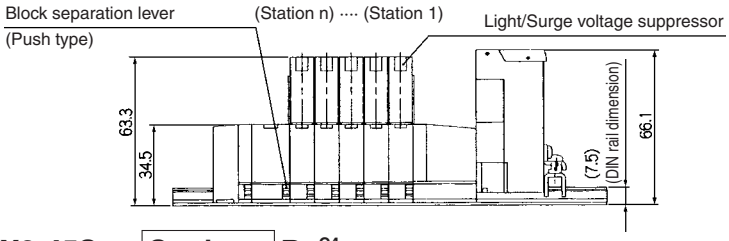

(mm)

Stations n	2 stations	3	4	5	6	7	8	9	10 stations
L1	148	160.5	173	185.5	185.5	198	210.5	223	235.5
L2	137.5	150	162.5	175	175	187.5	200	212.5	225
L3	81	91.5	102	112.5	123	133.5	144	154.5	165
L4	14.5	15.5	16.5	17.5	12	13	14	15	16

Note) Width of SI unit applicable to "E": Matsushita Electric Works, Ltd. and "G": Rockwell Automation, Inc. widens to 24.3 mm. For further information, please consult with SMC.

SS5X3-45S□- Stations B- C4 C6

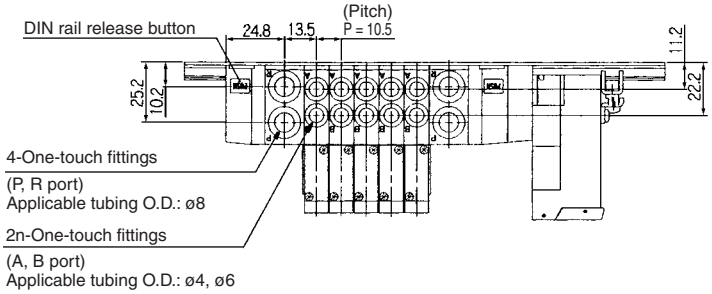

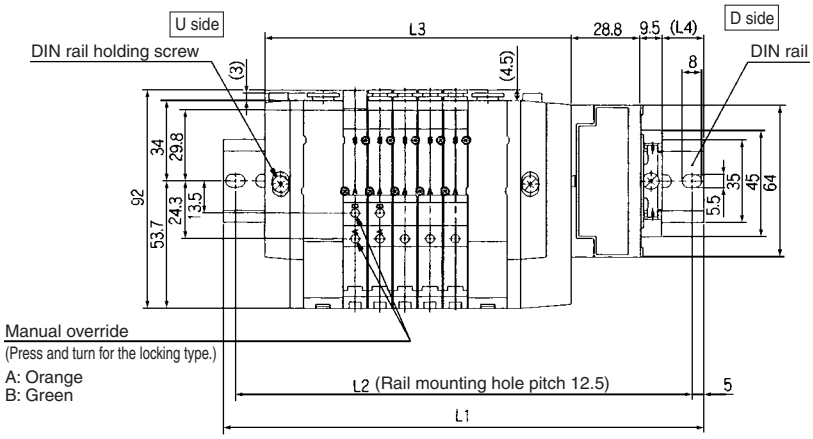

(mm)

Stations n	2 stations	3	4	5	6	7	8	9	10 stations
L1	160.5	173	185.5	198	210.5	223	223	235.5	248
L2	150	162.5	175	187.5	200	212.5	212.5	225	237.5
L3	97.5	108	118.5	129	139.5	150	160.5	171	181.5
L4	12.5	13.5	14.5	15.5	16.5	17.5	12	13	14

Stations n	11 stations	12	13	14	15	16 stations
L1	260.5	273	285.5	280.5	298	310.5
L2	250	262.5	275	275	287.5	300
L3	192	202.5	213	223.5	234	244.5
L4	15	16	17	12	13	14

Note) Width of SI unit applicable to "E": Matsushita Electric Works, Ltd. and "G": Rockwell Automation, Inc. widens to 24.3 mm. For further information, please consult with SMC.

Type 45S1□

Series ***SX3000/5000***

Base Mounted Manifold Stacking Type DIN Rail Mounted

Serial Transmission Type (Separated)

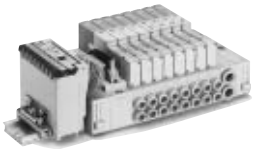

How to Order Manifold

SS5X 3 — 45S1 A D — 05 U — C4 — □

Series

3	SX3000
5	SX5000

SI unit

Symbol	Specifications
O	Without SI unit
A	With general type SI unit (Series EX300)
B	Mitsubishi Electric Corp.: MELSECNET/MINI-S3 Data Link System
C	OMRON Corp.: SYSBUS Wire System
D	SHARP Corp.: Satellite I/O Link System
E	Matsushita Electric Works: MEWNET-F System
F1	NKE Corp.: Uni-wire System (16 output points)
G	Rockwell Automation: Allen Bradley Remote I/O (RIO) System
H	NKE Corp.: Uni-wire H System
J1	SUNX Corp.: S-LINK System (16 output points)
J2	SUNX Corp.: S-LINK System (8 output points)
K	Fuji Electric Co.: T-LINK Mini System
Q	DeviceNet, CompoBus/D (OMRON Corp.)
R1	OMRON Corp.: CompoBus/S System (16 output points)
R2	OMRON Corp.: CompoBus/S System (8 output points)
U	JEMANET (JPCN-1)
V	Mitsubishi Electric Corp.: CC-LINK System

- For the general purpose type, a transmission unit is required on the CPU side.
- Even though when it is not equipped with SI unit, DIN rail length is long enough for future expectancy of mounting SI unit.

SI unit mounting position

Symbol	Mounting position
U	U side
D	D side

Valve stations

Symbol	Stations	Note
02	2 stations	Double wiring specifications
⋮	⋮	
08	8 stations	
09	9 stations	Applicable up to 16 solenoids. Use the manifold specification sheet to specify the wiring specifications.
⋮	⋮	
16	16 stations	

- This also includes the number of blanking plate assemblies.
- When special wiring is required on manifold with 2 to 8 stations, please use the manifold specification sheet.

SUP/EXH block assembly mounting position

Symbol	Mounting position	Stations
U	U side	2 to 10 stations
D	D side	2 to 10 stations
B	Both sides	2 to 16 stations
M	Special specifications	

∗ For special specifications, indicate separately by the manifold specification sheet.

A, B port size (Metric size)

Symbol	Port size	Applicable series
C4	One-touch fitting for ø4	SX3000
C6	One-touch fitting for ø6	
M	Mixed	
C4	One-touch fitting for ø4	SX5000
C6	One-touch fitting for ø6	
C8	One-touch fitting for ø8	
M	Mixed	

(Inch size)

Symbol	Port size	Applicable series
N3	One-touch fitting for ø5/32"	SX3000
N7	One-touch fitting for ø1/4"	
M	Mixed	
N3	One-touch fitting for ø5/32"	SX5000
N7	One-touch fitting for ø1/4"	
N9	One-touch fitting for ø5/16"	
M	Mixed	

∗ In the case of mixed specifications (M), indicate separately on the manifold specification sheet.

Option

When a longer DIN rail is desired than the specified stations, specify the station number to be required. (20 stations maximum)

How to Order Valve Manifold Assembly

Ordering example

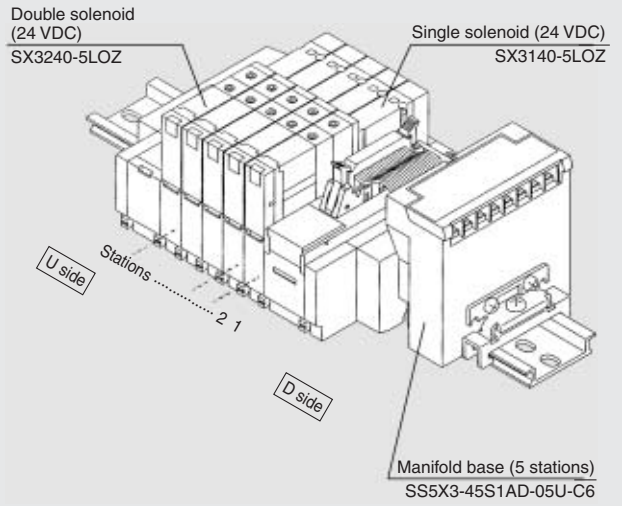

SS5X3-45S1AD-05U-C6··· 1 set (45S1 with serial 5-station manifold base no.)
∗SX3140-5LOZ····· 2 sets (Single solenoid part no.)
∗SX3240-5LOZ····· 3 sets (Double solenoid part no.)

∗ The asterisk denotes the symbol for assembly. Prefix it to the part nos. of the solenoid valve, etc.

- They will be assembled in the order listed starting at the first station at the D side whether the connector box is located at either end. When ordering with the double wiring specification, specify it in order, beginning with the 1 station on the D side.
- For manifolds with more than 8 stations (9 to 16), special wiring is required. Please use the manifold specification sheet.

How to Order Valves

SX 3 2 40 — 5 LOZ □

Series

3	SX3000
5	SX5000

Type of actuation

1	2 position single
2	2 position double
3	3 position closed center
4	3 position exhaust center
5	3 position pressure center

Rated voltage

5	24 VDC

Manual override

Nil	Non-locking push type
D	Push-turn locking slotted type

SI Unit Part No.

Symbol	Specifications	For SS5X□-45S	Symbol	Specifications	For SS5X□-45S
A	With general type SI unit (Series EX300)	EX321-S001	J1	SUNX Corp.: S-LINK System (16 output points)	EX121-SSL1
B	Mitsubishi Electric Corp.: MELSECNET/MINI-S3 Data Link System	EX321-S001	J2	SUNX Corp.: S-LINK System (8 output points)	EX121-SSL2
C	OMRON Corp.: SYSBUS Wire System	EX121-STA1	K	Fuji Electric Co.: T-LINK Mini System	EX121-SFU1
D	SHARP Corp.: Satellite I/O Link System	EX121-SSH1	Q	DeviceNet, CompoBus/D (OMRON Corp.)	EX121-SDN1
E	Matsushita Electric Works: MEWNET-F System	EX121-SPA1	R1	OMRON Corp.: CompoBus/S System (16 output points)	EX121-SCS1
F1	NKE Corp.: Uni-wire System (16 output points)	EX121-SUW1	R2	OMRON Corp.: CompoBus/S System (8 output points)	EX121-SCS2
G	Rockwell Automation: Allen Bradley Remote I/O (RIO) System	EX121-SAB1	U	JEMANET (JPCN-1)	EX121-SJN1
H	NKE Corp.: Uni-wire H System	EX121-SUH1	V	Mitsubishi Electric Corp.: CC-LINK System	EX121-SMJ1

SX3000: Serial Transmission Unit/Plug-in

SS5X3-45S1□U- Stations D-$^{C4}_{C6}$

Note) The L1 to L4 dimensions of SS5X3-45S1□ U- Stations U-□ are identical to those of SS5X3-45S1□ U-Stations D-□.

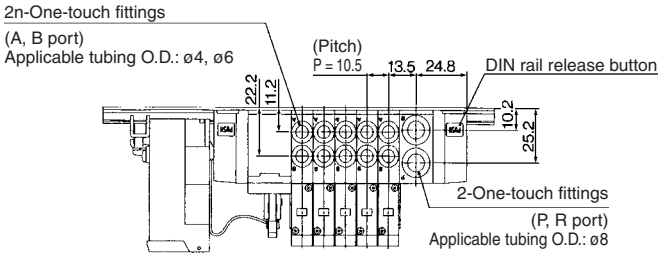

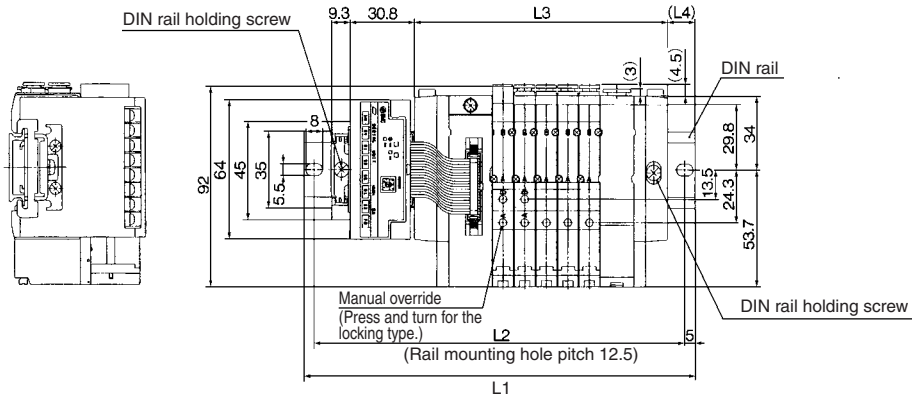

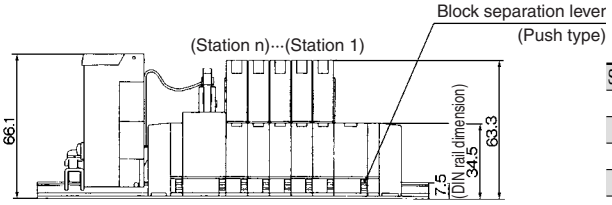

(mm)

Stations n	2 stations	3	4	5	6	7	8	9	10 stations
L1	160.5	173	185.5	198	198	210.5	223	235.5	248
L2	150	162.5	175	187.5	187.5	200	212.5	225	237.5
L3	91.5	102	112.5	123	133.5	144	154.5	165	175.5
L4	14	15	16	17	12	13	14	15	16

Note) Width of SI unit applicable to "E": Matsushita Electric Works, Ltd. and "G": Rockwell Automation, Inc. widens to 24.3 mm. For further information, please consult with SMC.

SS5X3-45S1□U- Stations B-$^{C4}_{C6}$

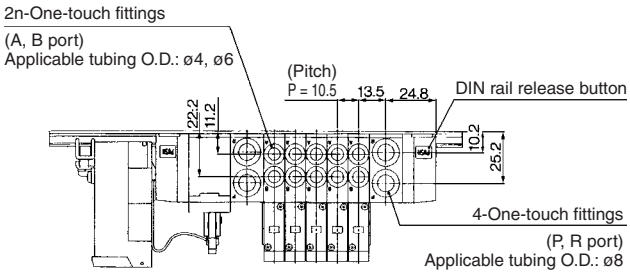

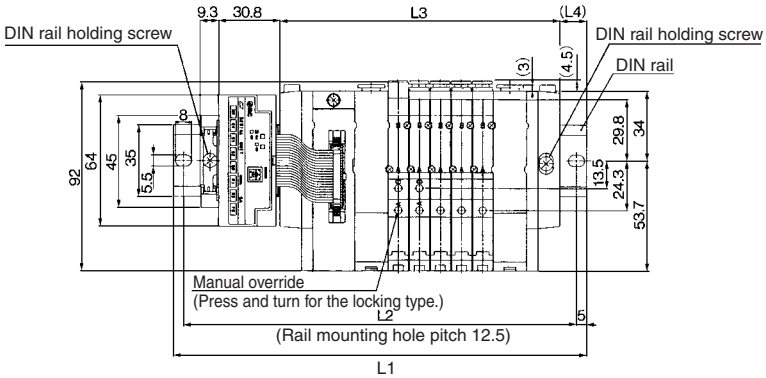

(mm)

Stations n	2 stations	3	4	5	6	7	8	9	10 stations
L1	173	185.5	198	210.5	223	235.5	235.5	248	260.5
L2	162.5	175	187.5	200	212.5	225	225	237.5	250
L3	108	118.5	129	139.5	150	160.5	171	181.5	192
L4	12	13	14	15	16	17	12	13	14

Stations n	11 stations	12	13	14	15	16 stations
L1	273	285.5	298	298	310.5	323
L2	262.5	275	287.5	287.5	300	312.5
L3	202.5	213	223.5	234	244.5	255
L4	15	16	17	11.5	12.5	13.5

Note) Width of SI unit applicable to "E": Matsushita Electric Works, Ltd. and "G": Rockwell Automation, Inc. widens to 24.3 mm. For further information, please consult with SMC.

SS5X3-45S1□D- Stations U- C4 C6

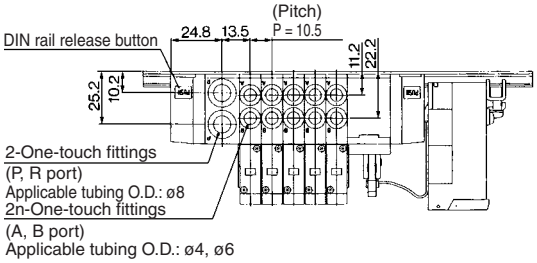

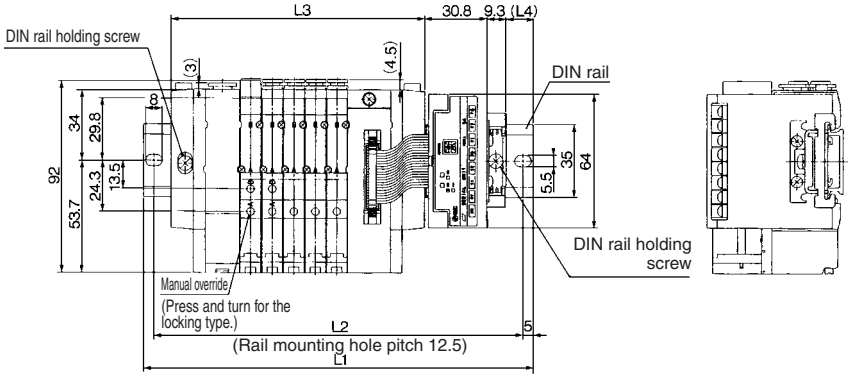

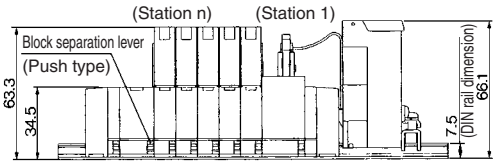

Note) The L1 to L4 dimensions of SS5X3-45S1□D- Stations D-□ are identical to those of SS5X3-45S1□ D- Stations U-□.

(mm)

Stations n	2 stations	3	4	5	6	7	8	9	10 stations
L1	160.5	173	185.5	198	198	210.5	223	235.5	248
L2	150	162.5	175	187.5	187.5	200	212.5	225	237.5
L3	91.5	102	112.5	123	133.5	144	154.5	165	175.5
L4	14	15	16	17	12	13	14	15	16

Note) Width of SI unit applicable to "E": Matsushita Electric Works, Ltd. and "G": Rockwell Automation, Inc. widens to 24.3 mm. For further information, please consult with SMC.

SS5X3-45S1□D- Stations B- C4 C6

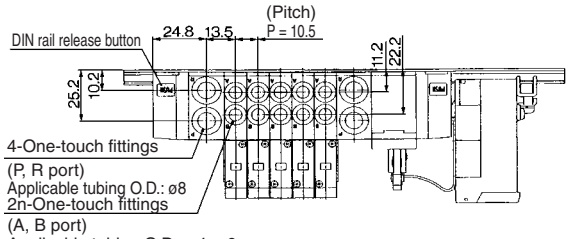

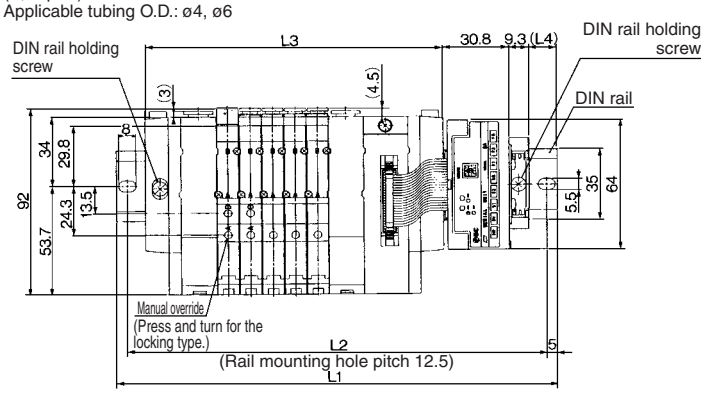

(mm)

Stations n	2 stations	3	4	5	6	7	8	9	10 stations
L1	173	185.5	198	210.5	223	235.5	235.5	248	260.5
L2	162.5	175	187.5	200	212.5	225	225	237.5	250
L3	108	118.5	129	139.5	150	160.5	171	181.5	192
L4	12	13	14	15	16	17	12	13	14

Stations n	11 stations	12	13	14	15	16 stations
L1	273	285.5	298	298	310.5	323
L2	262.5	275	287.5	287.5	300	312.5
L3	202.5	213	223.5	234	244.5	255
L4	15	16	17	11.5	12.5	13.5

Note) Width of SI unit applicable to "E": Matsushita Electric Works, Ltd. and "G": Rockwell Automation, Inc. widens to 24.3 mm. For further information, please consult with SMC.

Type 45S2

Made to Order Specifications:
Series SX3000/5000 Serial Transmission Type
With SMC's IN313

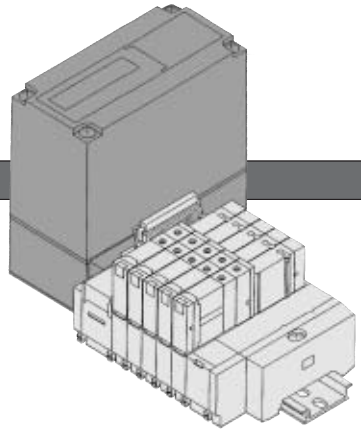

Serial Transmission Manifold Equipped with IN313

How to Order Manifold

Type 45S2 (Serial type with IN313)

SS5X 3 – 45S2 U – 06 D – C4 –

Series

3	SX3000
5	SX5000

SI unit mounting position

Symbol	Mounting position
U	U side
D	D side

Valve stations

Symbol	Stations	Note
02	2 stations	Double wiring specifications
⋮	⋮	
08	8 stations	
09	9 stations	Applicable up to 16 solenoids. Use the manifold specification sheet to specify the wiring specifications.
⋮	⋮	
16	16 stations	

- This also includes the number of blanking plate assemblys.
- When special wiring is required on manifold with 2 to 8 stations, please use the manifold specification sheet.

SUP/EXH block assembly mounting position

Symbol	Mounting position	Stations
U	U side	2 to 10 stations
D	D side	2 to 10 stations
B	Both sides	2 to 16 stations
M	Special specifications	

∗ For special specifications, indicate separately by the manifold specification sheet.

A, B port size (Metric size)

Symbol	Port size	Applicable series
C4	One-touch fitting for ø4	SX3000
C6	One-touch fitting for ø6	
M	Mixed	
C4	One-touch fitting for ø4	SX5000
C6	One-touch fitting for ø6	
C8	One-touch fitting for ø8	
M	Mixed	

(Inch size)

Symbol	Port size	Applicable series
N3	One-touch fitting for ø5/32"	SX3000
N7	One-touch fitting for ø1/4"	
M	Mixed	
N3	One-touch fitting for ø5/32"	SX5000
N7	One-touch fitting for ø1/4"	
N9	One-touch fitting for ø5/16"	
M	Mixed	

∗ In the case of mixed specifications (M), indicate separately on the manifold specification sheet.

Option

When a longer DIN rail is desired than the specified stations, specify the station number to be required. (20 stations at maximum)

How to Order Applicable SI Unit

IN313 – MB1

Applicable makers

MB1	For Mitsubishi Electric Corporation
TA1	For OMRON Corporation
FU1	For Fuji Electric Co., Ltd.
SH1	For SHARP Corporation
TY1	For Toyoda Machine Works, Ltd.
TY2	
PA1	For Matsushita Electric Works, Ltd.
HT1	For Hitachi, Ltd.
AB1	For Rockwell Automation, Inc. (Former Allen Bradley)
TS1	For TOSHIBA Corporation

How to Order Valves

SX 3 2 40 – 5 LOZ

Series

3	SX3000
5	SX5000

Type of actuation

1	2 position single
2	2 position double
3	3 position closed center
4	3 position exhaust center
5	3 position pressure center

Rated voltage

5	24 VDC

Manual override

Nil	Non-locking push type
D	Push-turn locking slotted type

SX3000: Serial Transmission Unit/Plug-in

SS5X3-45S2D- Stations U-C4/C6

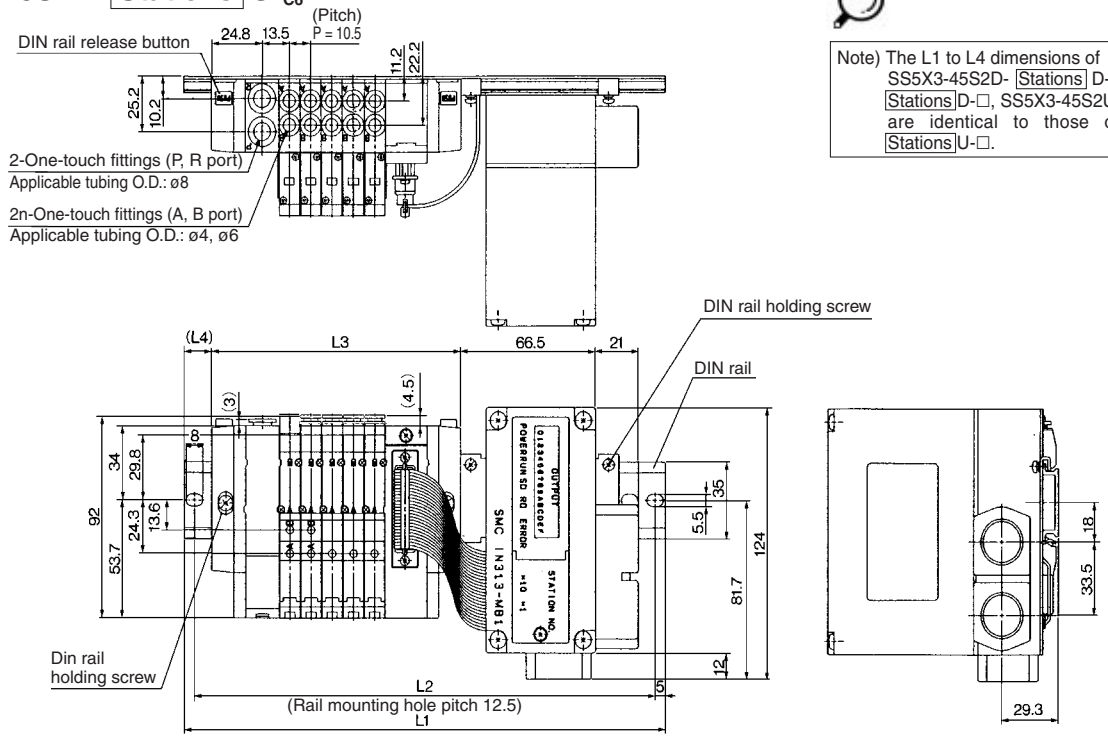

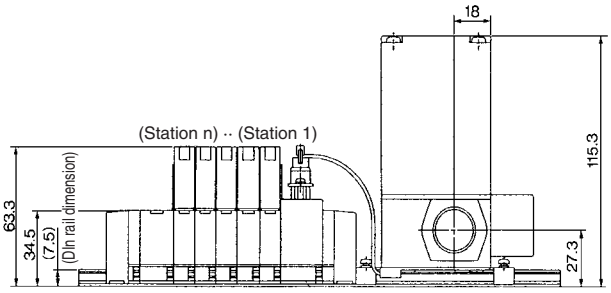

Note) The L1 to L4 dimensions of SS5X3-45S2D- Stations D-□, SS5X3-45S2U- Stations D-□, SS5X3-45S2U- Stations U-□ are identical to those of SS5X3-45S2D- Stations U-□.

(mm)

Stations n	2 stations	3	4	5	6	7	8	9	10 stations
L1	198	210.5	223	235.5	235.5	248	260.5	273	285.5
L2	187.5	200	212.5	225	225	237.5	250	262.5	275
L3	91.5	102	112.5	123	133.5	144	154.5	165	175.5
L4	14	15	16	17	12	13	14	15	16

SS5X3-45S2D- Stations B-C4/C6

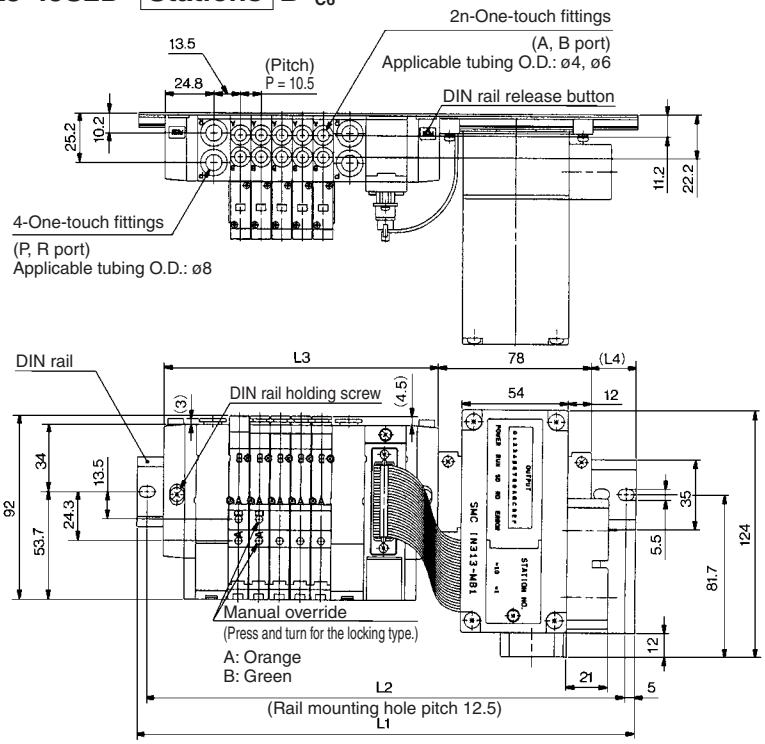

Note) The L1 to L4 dimensions of SS5X3-45S2U- Stations B-□ are identical to those of SS5X3-45S2D- Stations B-□.

(mm)

Stations n	2 stations	3	4	5	6	7	8	9 stations
L1	210.5	223	235.5	248	260.5	273	273	285.5
L2	200	212.5	225	237.5	250	262.5	262.5	275
L3	108	118.5	129	139.5	150	160.5	171	181.5
L4	12	13	14	15	16	17	12	13

Stations n	10 stations	11	12	13	14	15	16 stations
L1	298	310.5	323	335.5	335.5	348	360.5
L2	287.5	300	312.5	325	325	337.5	350
L3	192	202.5	213	223.5	234	244.5	255
L4	14	15	16	17	11.5	12.5	13.5

Type 45S3

Made to Order Specifications:
Series SX3000/5000 Serial Transmission Type
With OMRON Corp's G71-OD16

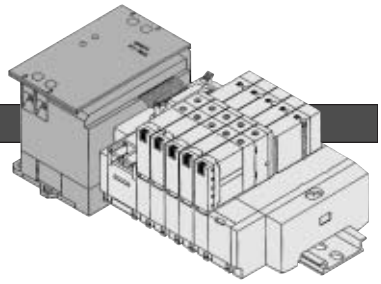

Serial Transmission Manifold Equipped with OMRON Corp's Transmission Unit G71-OD16

How to Order Manifold

Type 45S3 (Serial type with transmission unit)

SS5X 3 – 45S3 □ U – 06 D – C4 – □

Series

3	SX3000
5	SX5000

Specifications

Symbol	Specifications
Nil	With transmission unit
O Note)	Without transmission unit

Note) Even though when it is not equipped with transmission unit, DIN rail length is long enough for future expectancy of mounting transmission unit. When a shorter rail is required (same as type 45□), suffix "O" in the optional blank at the end of part number.

Transmission unit mounting position

Symbol	Mounting position
U	U side
D	D side

Valve stations

Symbol	Stations	Note
02	2 stations	Double wiring specifications
⋮	⋮	
08	8 stations	
09	9 stations	Applicable up to 16 solenoids. Use the manifold specification sheet to specify the wiring specifications.
⋮	⋮	
16	16 stations	

- This also includes the number of blanking plate assemblies.
- When special wiring is required on manifold with 2 to 8 stations, please use the manifold specification sheet.

SUP/EXH block assembly mounting position

Symbol	Mounting position	Stations
U	U side	2 to 10 stations
D	D side	2 to 10 stations
B	Both sides	2 to 16 stations
M	Special specifications	

∗ For special specifications, indicate separately by the manifold specification sheet.

A, B port size (Metric size)

Symbol	Port size	Applicable series
C4	One-touch fitting for ø4	SX3000
C6	One-touch fitting for ø6	
M	Mixed	
C4	One-touch fitting for ø4	SX5000
C6	One-touch fitting for ø6	
C8	One-touch fitting for ø8	
M	Mixed	

(Inch size)

Symbol	Port size	Applicable series
N3	One-touch fitting for ø5/32"	SX3000
N7	One-touch fitting for ø1/4"	
M	Mixed	
N3	One-touch fitting for ø5/32"	SX5000
N7	One-touch fitting for ø1/4"	
N9	One-touch fitting for ø5/16"	
M	Mixed	

∗ In the case of mixed specifications (M), indicate separately on the manifold specification sheet.

Option

When a longer DIN rail is desired than the specified stations, specify the station number to be required. (20 stations at maximum)

How to Order Valves

SX 3 2 40 – 5 LOZ □

Series

3	SX3000
5	SX5000

Type of actuation

1	2 position single
2	2 position double
3	3 position closed center
4	3 position exhaust center
5	3 position pressure center

Rated voltage

5	24 VDC

Manual override

Nil	Non-locking push type
D	Push-turn locking slotted type

Internal Wiring of Manifold

Serial type 45S3

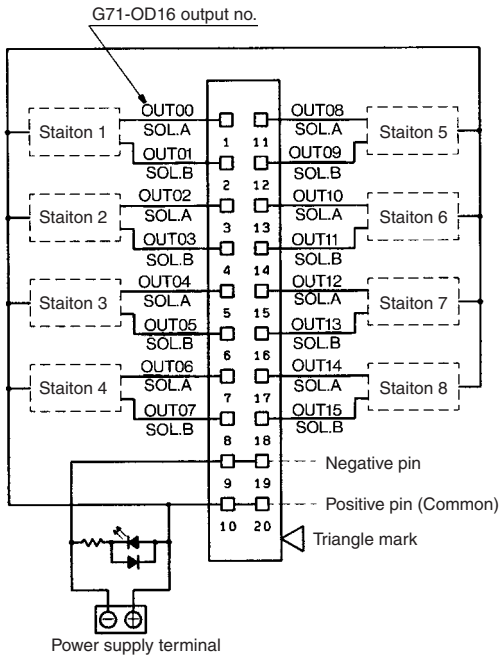

- For specifications on OMRON Corp's transmitter terminals, refer to the instruction manual or the catalog of transmitter terminals, etc.
- When using a single solenoid, connect wire to A side.
- The above diagram is the double wiring specifications for up to 8 stations. When the wiring specifications are specified on the manifold specification sheet, the valve assignment for the number of transmission unit will differ from the above diagram. For more information, please contact SMC.
- The maximum number of stations is 16 in terms of manifold bases, as well as solenoids. (Please consult with SMC for more stations.)

⚠ Caution

- The wiring specifications for SS5X$\frac{3}{5}$-45S30 are different from those for SS5X$\frac{3}{5}$-45PG.

SX3000: Serial Transmission Unit/Plug-in

SS5X3-45S3D- Stations U-C4/C6

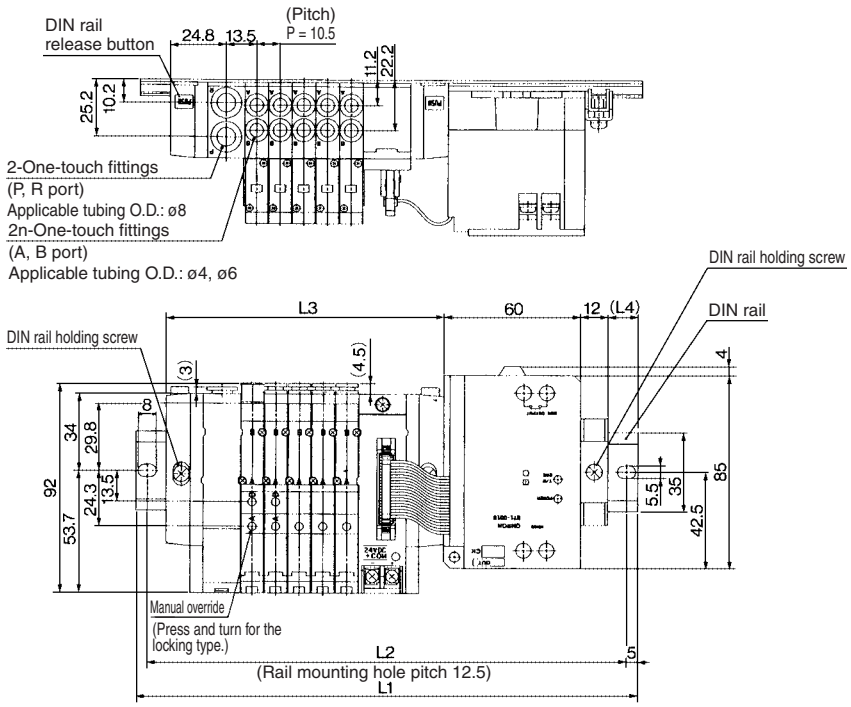

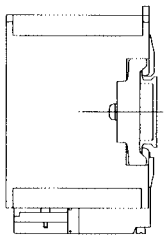

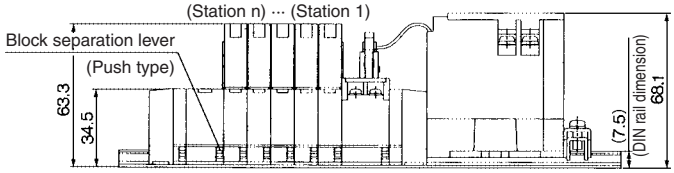

Note) The L1 to L4 dimensions of SS5X3-45S3D- Stations D-□, SS5X3-45S3U- Stations D-□, SS5X3-45S3U- Stations U-□ are identical to those of SS5X3-45S3D- Stations U-□.

(mm)

Stations n	2 stations	3	4	5	6	7	8	9	10 stations
L1	198	198	210.5	223	235.5	248	260.5	260.5	273
L2	187.5	187.5	200	212.5	225	237.5	250	250	262.5
L3	91.5	102	112.5	123	133.5	144	154.5	165	175.5
L4	17	12	13	14	15	16	17	11.5	12.5

SS5X3-45S3D- Stations B-C4/C6

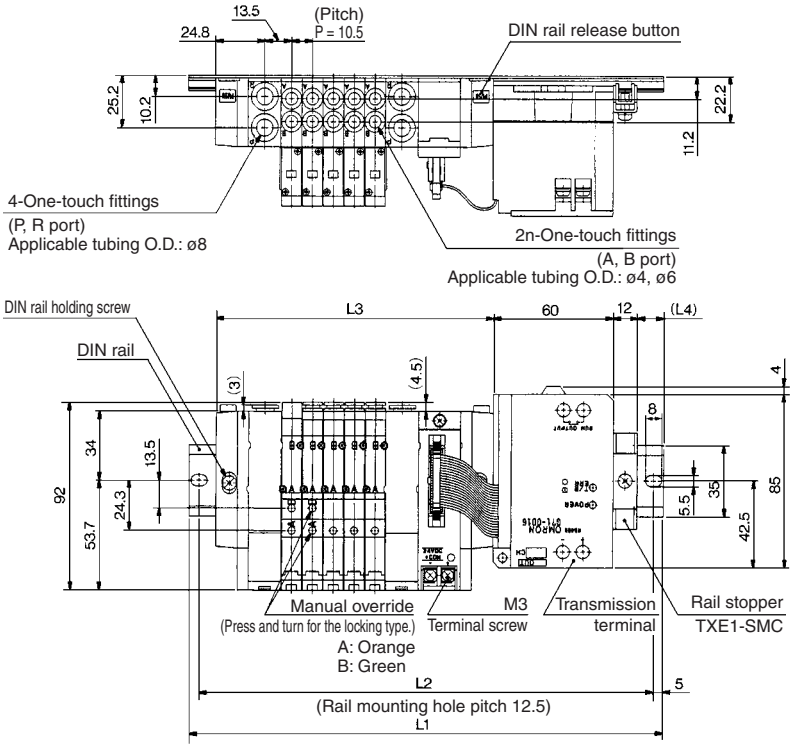

Note) The L1 to L4 dimensions of SS5X3-45S3U- Stations B-□ are identical to those of SS5X3-45S3D- Stations B-□.

(mm)

Stations n	2 stations	3	4	5	6	7	8	9 stations
L1	210.5	223	235.5	235.5	248	260.5	273	285.5
L2	200	212.5	225	225	237.5	250	262.5	275
L3	108	118.5	129	139.5	150	160.5	171	181.5
L4	15	16	17	12	13	14	15	16

Stations n	10 stations	11	12	13	14	15	16 stations
L1	298	298	310.5	323	335.5	348	360.5
L2	287.5	287.5	300	312.5	325	337.5	350
L3	192	202.5	213	223.5	234	244.5	255
L4	17	11.5	12.5	13.5	14.5	15.5	16.5

Type 45
Type 45□

Made to Order

Made to Order Specifications:
Series SX3000/5000
External Pilot/Built-in Silencer

External pilot manifold bases for low-pressure/vacuum use are added to split style/DIN rail manifolds. The built-in silencer has produced a clear-cut appearance.

Individual Wiring

How to Order Manifold

Type 45

SS5X 3/5 – 45 – 05 U R – C6 –

Series

3	SX3000
5	SX5000

Valve stations

Symbol	Stations
02	2 stations
⋮	⋮
20	20 stations

• This also includes the number of blanking plate assemblies.

SUP/EXH block assembly mounting position

Symbol	Mounting position	Stations
U	U side	2 to 10 stations
D	D side	
B	Both sides	2 to 20 stations
M	Special specifications	

∗ For special specifications, indicate separately by the manifold specification sheet.

Option

When a longer DIN rail is desired than the specified stations, specify the station number to be required. (20 stations maximum)

SUP/EXH block assembly specifications

Symbol	Specifications
R	External pilot specifications
S	Internal pilot/Built-in silencer
RS	External pilot/Built-in silencer

A, B port size

(Metric size)

Symbol	Port size	Applicable series
C4	One-touch fitting for ø4	SX3000
C6	One-touch fitting for ø6	
M	Mixed	
C4	One-touch fitting for ø4	SX5000
C6	One-touch fitting for ø6	
C8	One-touch fitting for ø8	
M	Mixed	

(Inch size)

Symbol	Port size	Applicable series
N3	One-touch fitting for ø5/32"	SX3000
N7	One-touch fitting for ø1/4"	
M	Mixed	
N3	One-touch fitting for ø5/32"	SX5000
N7	One-touch fitting for ø1/4"	
N9	One-touch fitting for ø5/16"	
M	Mixed	

∗ In the case of mixed specifications (M), indicate separately on the manifold specification sheet.

How to Order Valve Manifold Assembly

Ordering example

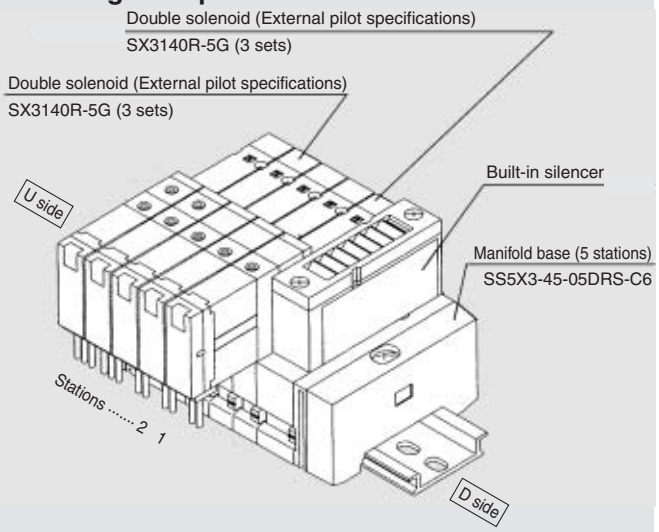

SS5X3-45-05DRS-C6··1 set (External pilot specifications built-in silencer part no.)
∗SX3140R-5G····· 3 sets (Single solenoid part no.)
∗SX3240R-5G····· 2 sets (Double solenoid part no.)

∗The asterisk denotes the symbol for assembly. Prefix it to the part nos. of the solenoid valve, etc.

They will be assembled in the order listed starting at the first station at the D side even if SUP/EXH block assembly is located at either end.
In ordering, specify the part nos. in the order from the 1st. station on D side. Besides, when the arrangement will be complicated, fill out the Manifold Specification Sheet to instruct us.
For manifolds with SUP/EXH block at each end of the manifold, external pilot ports and silencers will be also located at each end of the manifold.
To order the SUP/EXH block assembly (SX3/5000-51-1A) mounted at a location order than the ends of manifold, refer to the manifold specification sheet along with assembly part no.

How to Order Valves

SX 5 2 40 □ – 5 N L □ □

Series

3	SX3000
5	SX5000

Type of actuation

1	2 position single
2	2 position double
3	3 position closed center
4	3 position exhaust center
5	3 position pressure center

Pilot type

Nil	Internal pilot
R	External pilot

Rated voltage

5	24 VDC
6	12 VDC
V	6 VDC
S	5 VDC
R	3 VDC

Common specifications

Nil	Positive common
N	Negative common

Note) Put nothing for single grommet style and single without indicator light and surge voltage suppresser.

Electrical entry

Grommet	L plug connector	M plug connector
G: Lead wire length 300 mm lead	**L:** With lead wire (Length 300 mm)	**M:** With lead wire (Length 300 mm)
H: Lead wire length 600 mm	**LN:** Without lead wire	**MN:** Without lead wire
	LO: Without connector	**MO:** Without connector

∗ The LN or MN option includes 2 sockets for single solenoid valves and 3 sockets for double solenoid valves.

Light/Surge voltage suppressor

Nil	Without light/surge voltage suppressor
S	With surge voltage suppressor
Z	With light/surge voltage suppressor

Manual override

Nil	Non-locking push type
D	Push-turn locking slotted type

Plug-in Type

How to Order Manifold

Type 45□

SS5X$^{3}_{5}$ – 45 □ F U – 05 U R – C4 – □ – □

Series

3	SX3000
5	SX5000

Common specifications

Nil	Positive common
N	Negative common

No symbol is used for T, T1, S□ types.

Connector type

Symbol	Mounting position
F	D-sub connector
P	Flat ribbon cable 26 pins
PG	Flat ribbon cable 20 pins
PH	Flat ribbon cable 10 pins
T	Terminal block 9 pins
T1	Terminal block 18 pins
G	Flat ribbon cable (PC wiring system compatible)
S□	Serial Transmission Type

For details, refer to pages 1-6-82 to 85, 112, 119, 124, and 127.

Connector mounting position

Symbol	Mounting position
U	U side
D	D side

SUP/EXH block assembly mounting position

Symbol	Mounting position	Stations
U	U side	2 to 10 stations
D	D side	
B	Both sides	2 to 20 stations
M	Special specifications	

∗ For special specifications, indicate separately by the

SUP/EXH block assembly specifications

Symbol	Specifications
R	External pilot specifications
S	Internal pilot/Built-in silencer
RS	External pilot/Built-in silencer

Valve stations

Symbol	Stations	Note
02	2 stations	Depending on the connector,the number of stations is limited. For details, refer to pages 1-6-82 to 85, 112, 119, 124, and 127.
⋮	⋮	
20	20 stations	

• This also includes the number of blanking plate assemblies.

A, B port size (Metric size)

Symbol	Port size	Applicable series
C4	One-touch fitting for ø4	SX3000
C6	One-touch fitting for ø6	
M	Mixed	
C4	One-touch fitting for ø4	SX5000
C6	One-touch fitting for ø6	
C8	One-touch fitting for ø8	
M	Mixed	

(Inch size)

Symbol	Port size	Applicable series
N3	One-touch fitting for ø5/32"	SX3000
N7	One-touch fitting for ø1/4"	
M	Mixed	
N3	One-touch fitting for ø5/32"	SX5000
N7	One-touch fitting for ø1/4"	
N9	One-touch fitting for ø5/16"	
M	Mixed	

∗ In the case of mixed specifications (M), indicate separately on the manifold specification sheet.

Voltage

Nil	24 VDC
12V	12 VDC

Option

When a longer DIN rail is desired than the specified stations, specify the station number to be required. (20 stations at maximum)

How to Order Valve Manifold Assembly

Ordering example

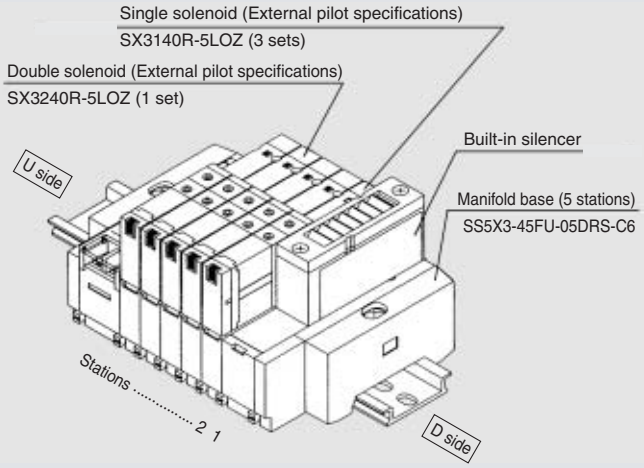

SS5X3-45FU-05DRS-C6··1 set (External pilot specifications with built-in silencer part no.)
∗SX3140R-5LOZ····· 3 sets (Single solenoid part no.)
∗SX3240R-5LOZ····· 2 sets (Double solenoid part no.)

∗ The asterisk denotes the symbol for assembly. Prefix it to the part nos. of the solenoid valve, etc.

They will be assembled in the order listed starting at the first station at the D side even if SUP/EXH block assembly is located at either end.
In ordering, specify the part nos. in the order from the 1st. station on D side. Besides, when the arrangement will be complicated, fill out the Manifold Specification Sheet to instruct us.
For manifolds with SUP/EXH block at each end of the manifold, external pilot ports and silencers will be also located at each end of the manifold.
To order the SUP/EXH block assembly (SX3/5000-51-2A) mounted at a location other than the ends of manifold, refer to the manifold specification sheet.

How to Order Valves

SX 3 2 40 □ – 5 □ LOZ □

Series

3	SX3000
5	SX5000

Type of actuation

1	2 position single
2	2 position double
3	3 position closed center
4	3 position exhaust center
5	3 position pressure center

Pilot type

Nil	Internal pilot
R	External pilot

Rated voltage

5	24 VDC
6	12 VDC
V∗	6 VDC
S∗	5 VDC
R∗	3 VDC

∗ mark: Type 45T and T1 only S□ type: 24 VDC only

Common specifications

Nil	Positive common
N	Negative common

∗ Common specifications for the valve must correspond with common specifications for the manifold.

Manual override

Nil	Non-locking push type
D	Push-turn locking slotted type

External Pilot/Built-in Silencer

SX3000: SS5X3-45- Stations DRS- C4 C6

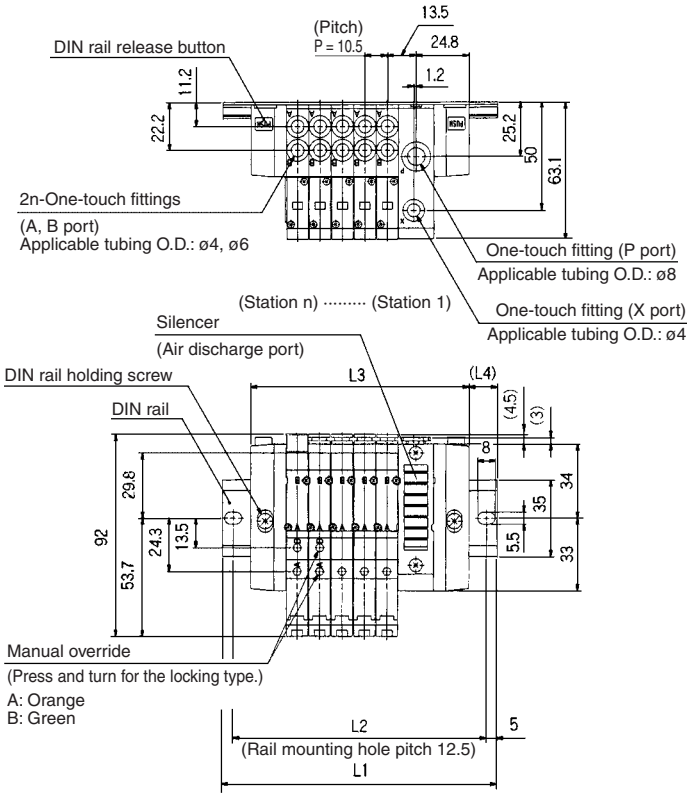

SS5X3-45- Stations DR- C4 C6

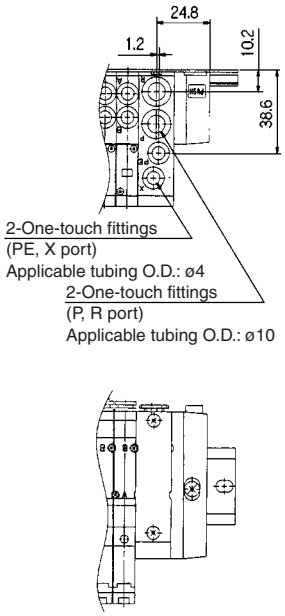

Note) The dimensions L1 to L4 are identical to SS5X3-45 - Station U D B - C4 C6 (P. 1-6-78).

SX5000: SS5X5-45- Stations DRS- C4 C6 C8

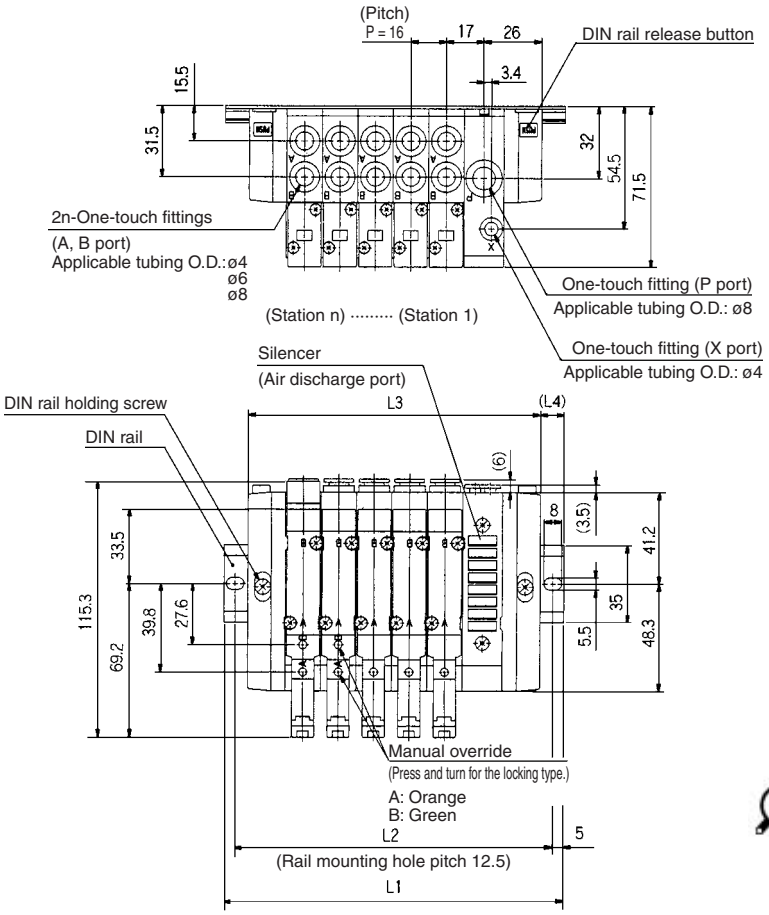

SS5X5-45- Stations DR- C4 C6 C8

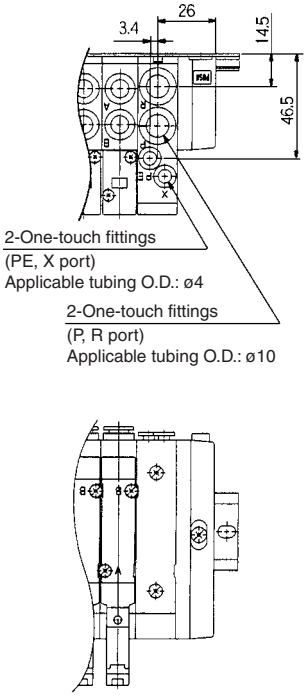

Note) The dimensions L1 to L4 are identical to SS5X5-45 - Station U D B - C4 C6 C8 (P. 1-6-79).

External Pilot/Built-in Silencer

SX3000:SS5X3-45FU- Stations DRS-C4/C6

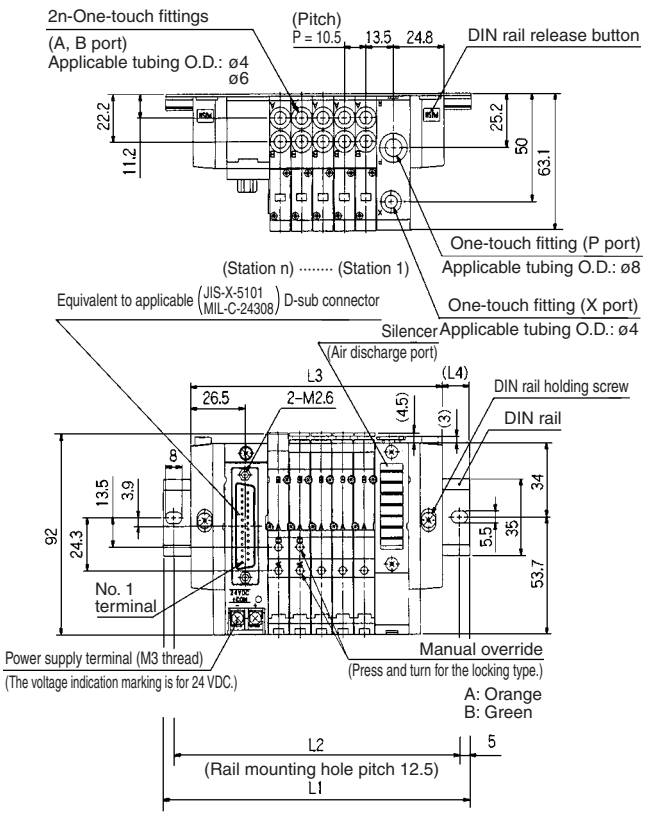

SS5X3-45FU- Stations DR-C4/C6

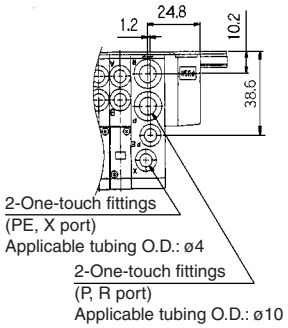

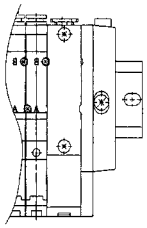

Note) The dimensions L1 to L4 are identical to SS5X3-45F U/D Station U/B - C4/C6 (P. 1-6-92).

SX5000:SS5X5-45FU- Stations DRS-C4/C6/C8

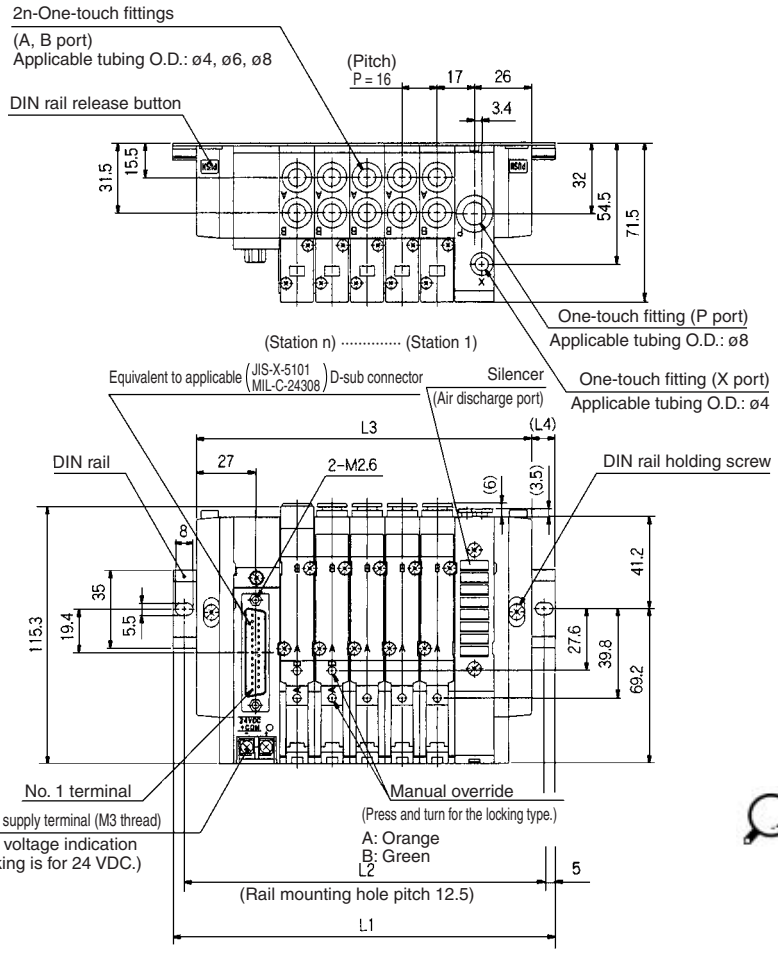

SS5X5-45FU- Stations DR-C4/C6/C8

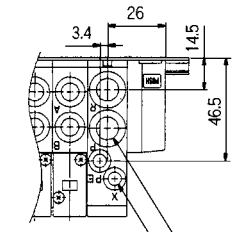

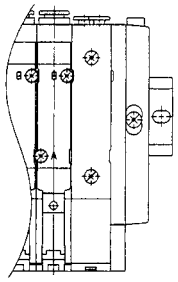

Note) The dimensions L1 to L4 are identical to SS5Y5-45F U/D Station U/D/B - C4/C6/C8 (P. 1-6-94).