Flow Sensor

For suction verification of very small workpieces

The flow sensor enables more reliable suction verification than a pressure sensor.

New A measuring flow rate range of 0.0 to 0.1 L/min (-X502) has been added.

Flow Sensor
PFMV5 Series p. 6

New 3-Screen Display

Digital Flow Monitor
PFGV301 Series p. 13

- Voltage display/flow rate display
  Sensor voltage display/flow rate display can be selected in the settings.
- Settable switch output
  It is possible to change the settings while checking the measured value.
- Dedicated monitor for the PFMV5

Flow Sensor

Flow rate difference Large

Stable detection with fewer detection mistakes

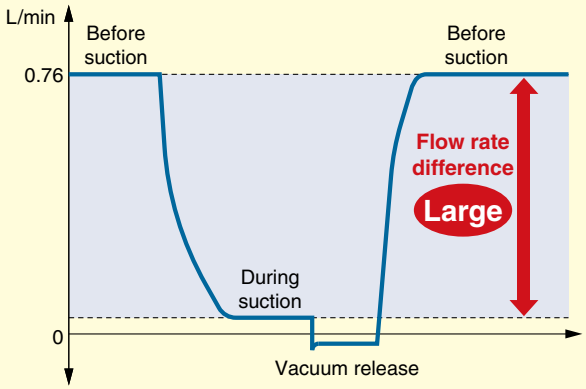

Pressure Sensor

Pressure difference Small

Unstable detection due to pressure fluctuations

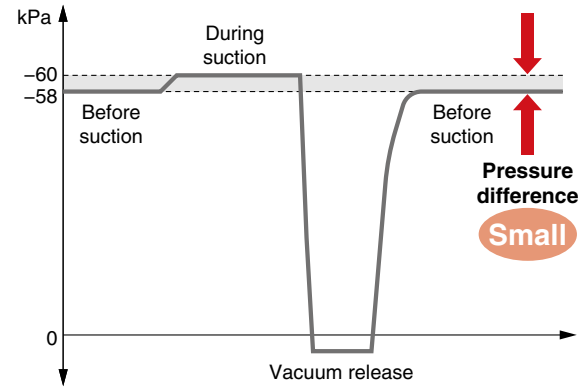

(Comparison with a nozzle diameter of ø0.3 at a vacuum pressure of –60 kPa)

- **Repeatability: ±2% F.S.**
- **Response speed: 5 ms or less**
- **Withstand pressure: 500 kPa**
- **Grease-free**

Model		Range	Rated flow range [L/min]
			–3.0 / –1.0 / –0.5 / 0 / 0.1 / 0.5 / 1.0 / 3.0
PFMV	New 505-X502	0.1 L/min	
	505	0.5 L/min	
	510	1.0 L/min	
	530	3.0 L/min	
	505F	±0.5 L/min	
	510F	±1.0 L/min	
	530F	±3.0 L/min	

PFMV5/PFGV301 Series

SMC

CAT.ES100-67D

Flow Sensor
PFMV5 Series p. 6

Compact and Lightweight

The taper-shaped flow passage in front of the sensor chip enables stable sensing.

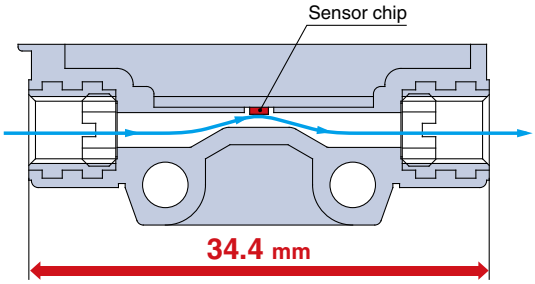

Space-saving piping

The product is mountable in locations with limited space as piping space is not required.

* When using a One-touch fitting (KQ2L04-M5N)

With a bend-resistant cable

Mounting

- Direct mounting

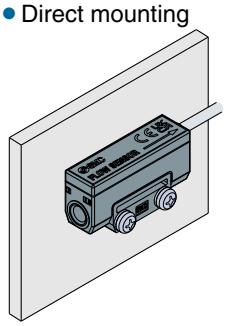

- Manifold mounting

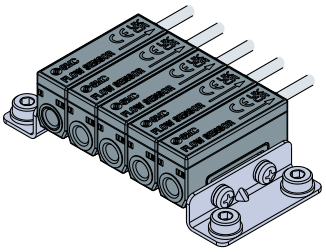

- Single-side bracket mounting

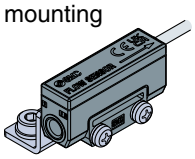

- Both-side bracket mounting

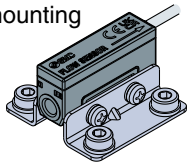

Applications

- For suction verification of very small workpieces

· Suction of small components can be verified.
· Highly applicable to small nozzles.
· Nozzle clogging and crushing can be detected.

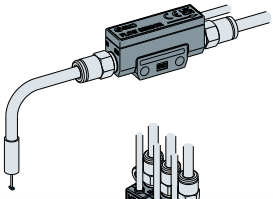

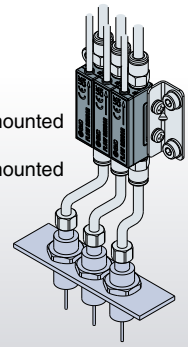

· Sensors can be mounted on a manifold.
· Sensors can be mounted near pads.

- For leakage testing of 0.1 L/min or less

· Pin holes in molded parts can be easily detected.

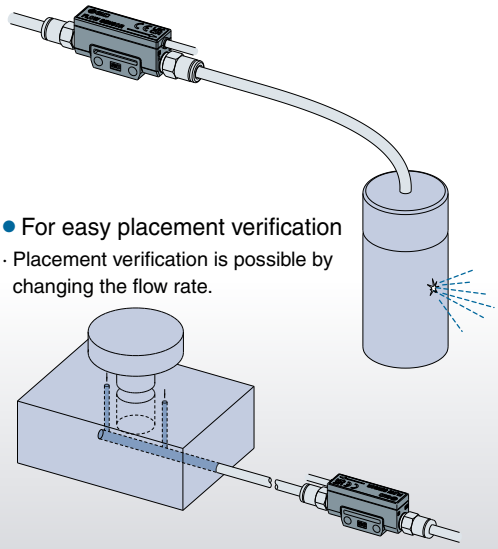

- For easy placement verification

· Placement verification is possible by changing the flow rate.

Related Equipment
p. 12

Compact Suction Filter

Filtration: 3 µm (Nominal)
Applicable tubing (O.D./I.D.): ø6/ø4

* Needs to be ordered separately.

IN/OUT: M5

* Needs to be ordered separately.

IN: ø6 barb fitting OUT: M5

3-Screen Display Digital Flow Monitor
PFGV301 Series p. 13

Allows for the monitoring of remote lines

Centralized flow control

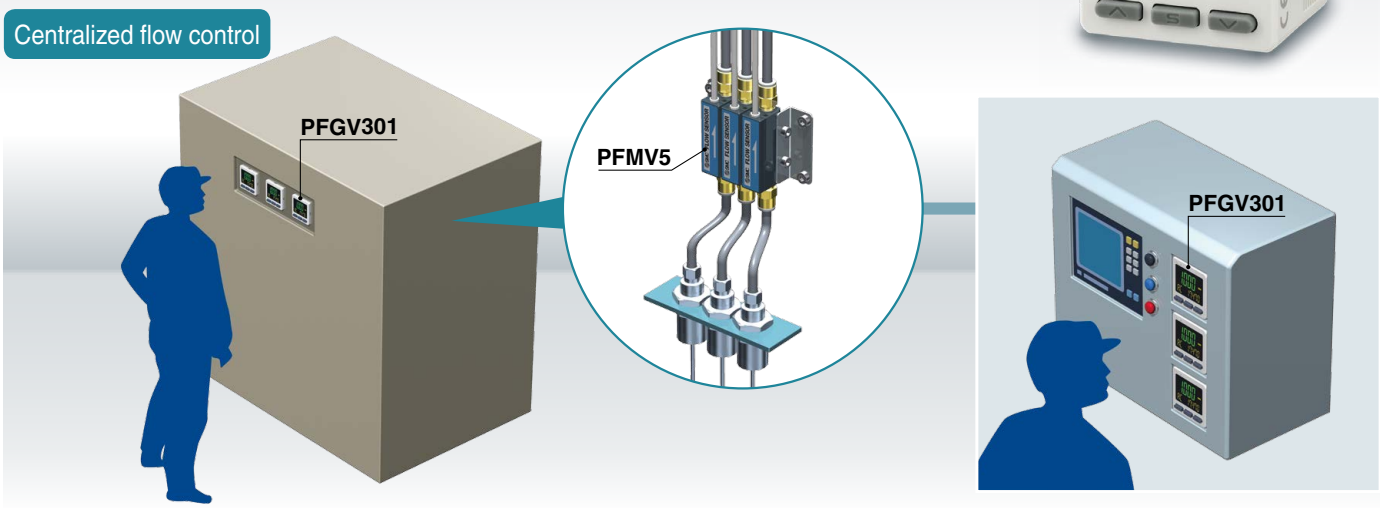

Visualization of settings

The sub screen (label) shows the item to be set.

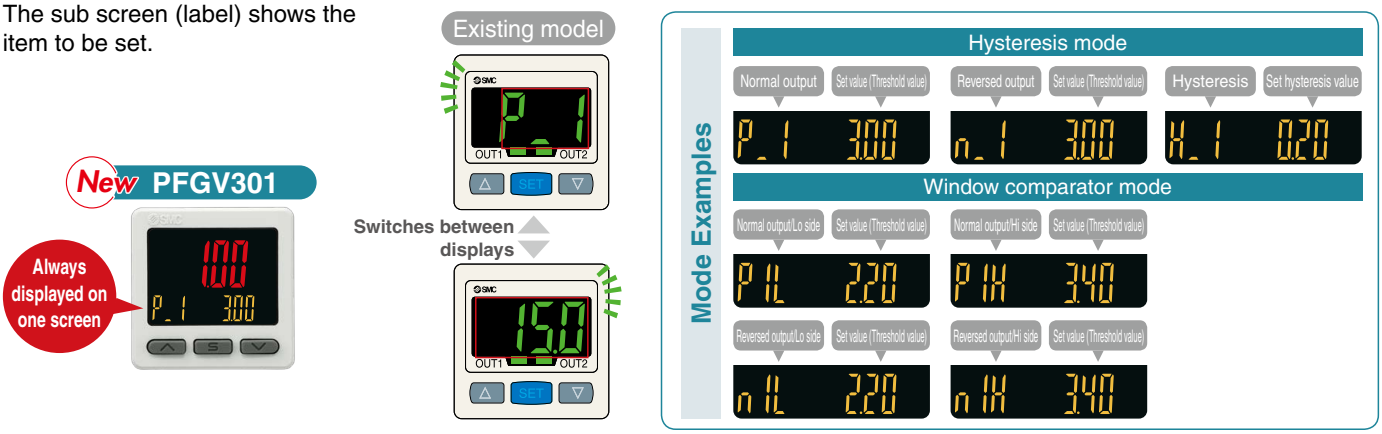

Easy screen switching

It is possible to change the settings while checking the measured value.

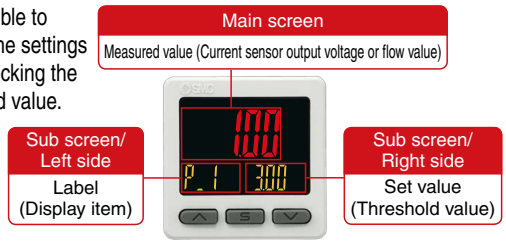

The sub screen can be switched by pressing the up/down buttons.

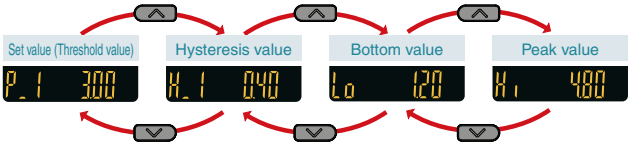

∗ Either "Input of line name" or "Display OFF" can be added via the function settings.

Simple 3-step setting

When the S button is pressed and the set value (P_1) is being displayed, the set value (threshold value) can be set. When the S button is pressed and the hysteresis (H_1) is being displayed, the hysteresis value can be set.

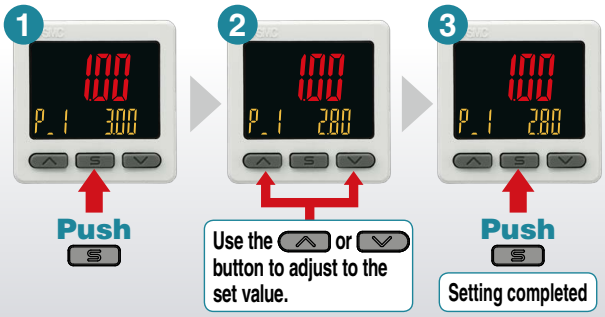

With a snap shot function for set value reading

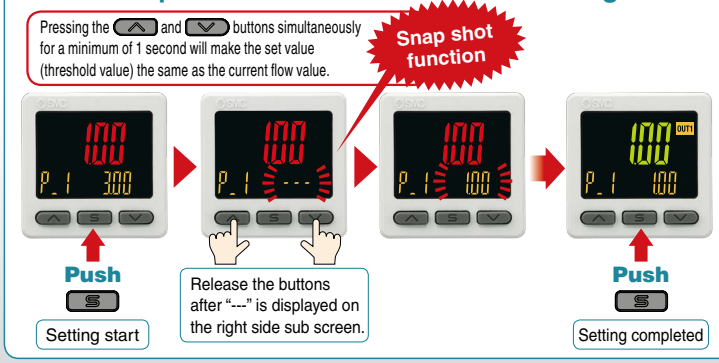

NPN/PNP switch function

The number of stock items can be reduced.

NPN PNP

Analog output of 0 to 10 V is also available.

Voltage output	1 to 5 V	Switchable
	0 to 10 V	
Current output	4 to 20 mA	Fixed

Input range selection (for Pressure/Flow rate)

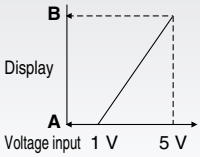

The displayed value to the sensor input can be set as required.
(Voltage input: 1 to 5 V)
Pressure switch/Flow switch can be displayed.

A is displayed for 1 V.
B is displayed for 5 V. The range can be set as required.

■Pressure Sensor for General Fluids/PSE570

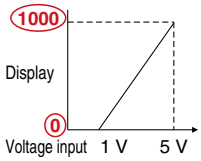

	A	B
PSE570	0	1000
PSE573	–100	100
PSE574	0	500

Set A and B to the values shown in the table above.

Convenient functions

Copy function

The set values of the monitor can be copied.

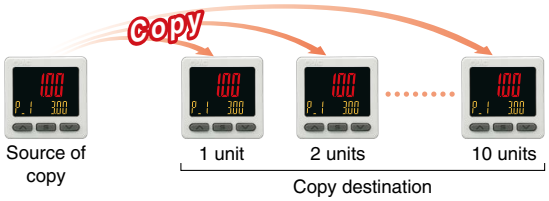

Security code

The key locking function keeps unauthorized persons from tampering with the settings.

Power saving function

Power consumption is reduced by turning off the monitor.

Current consumption*1	Reduction rate*2
25 mA or less	Approx. 50% reduction

*1 During normal operation *2 In power saving mode

External input function

The accumulated value, peak value, and bottom value can be reset remotely.

Compact & Lightweight

- **Compact: Max. 6 mm shorter**
- **Lightweight: Max. 5 g lighter (30 g → 25 g)**

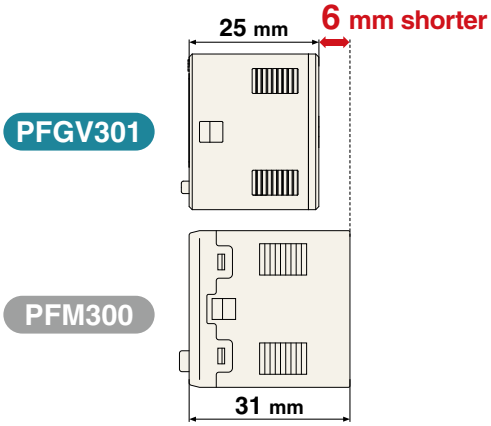

Functions

- Output operation
- Simple setting mode
- Display color
- Delay time setting
- Digital filter setting
- FUNC output switching function
- Selectable analog output function
- External input function
- Auto-shift function
- Forced output function
- Peak/Bottom value display
- Setting of a security code
- Key-lock function
- Reset to the default settings
- Display with zero cut-off setting
- Auto-preset function
- Selection of the display on the sub screen
- Analog output free range function
- Error display function
- Copy function
- Selection of power saving mode

Mounting

Bracket configuration allows for mounting in four orientations.

Bracket A

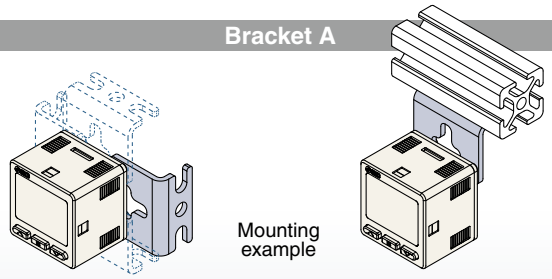

Bracket B

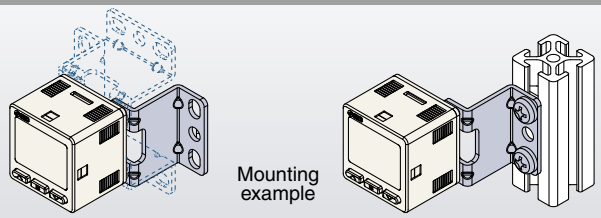

Panel mounting

Mountable side by side without clearance

One opening!

· Reduced panel fitting labor
· Space saving

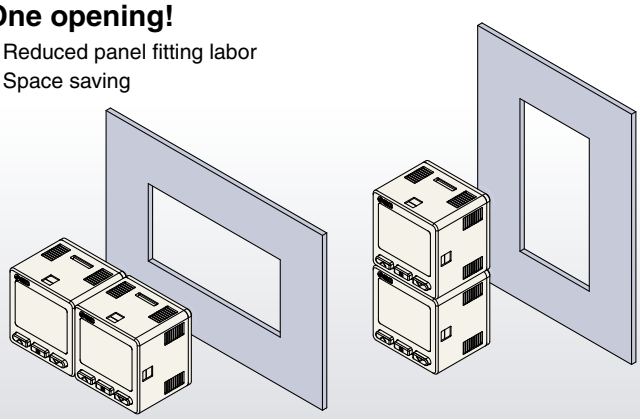

CONTENTS

Flow Sensor *PFMV5* Series
3-Screen Display Digital Flow Monitor *PFGV301* Series

Model Selection

Nozzle Diameter and Flow Rate Characteristics (Approximate values)

Use the following graphs as a reference to select sensor measuring range.

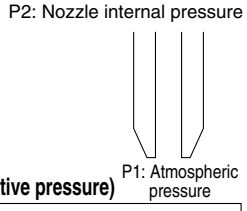

Nozzle Diameter – Flow Rate Characteristics (Vacuum)

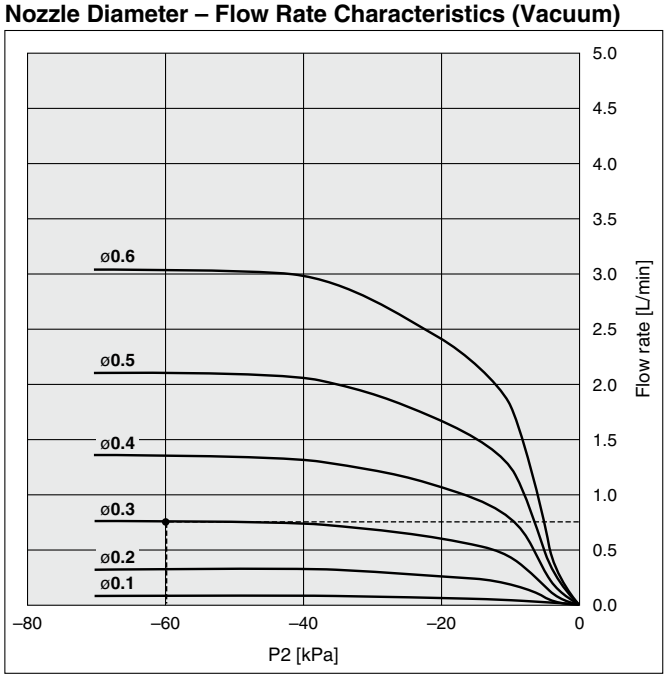

Nozzle Diameter – Flow Rate Characteristics (Positive pressure)

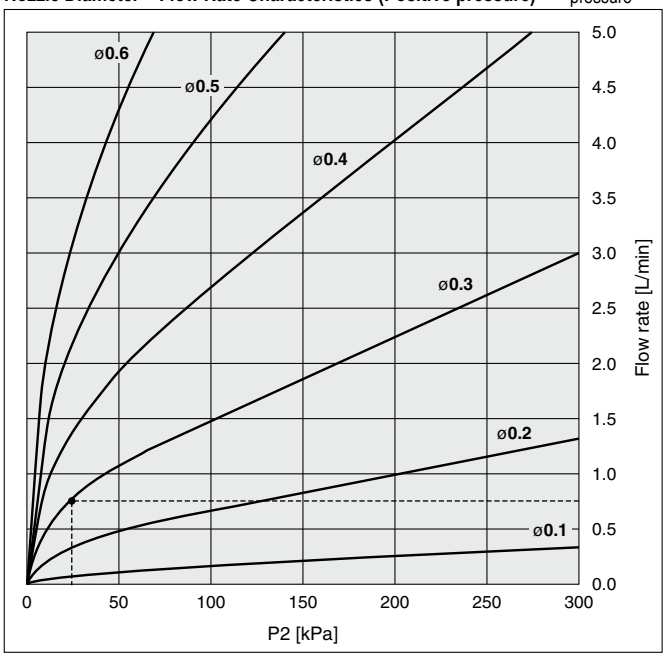

Example (Vacuum)

Selecting conditions:

Nozzle diameter: ø0.3 P1: 0 [kPa]
P2: –60 [kPa]

The flow rate will be 0.7 to 0.8 [L/min] based on the graph.
→ Select the PFMV510-1.

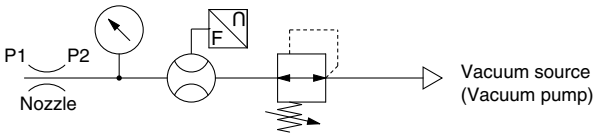

Example (Positive pressure)

Selecting conditions:

Nozzle diameter: ø0.3 P1: 0 [kPa]
P2: 20 [kPa]

The flow rate will be 0.7 to 0.8 [L/min] based on the graph.
→ Select the PFMV510-1.

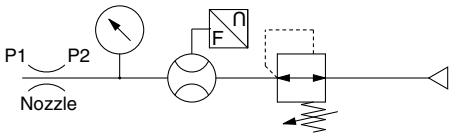

∗ Since the calculated value may not meet the approximate value due to leakage and pressure loss in the piping system, please check the result by using actual equipment.

Flow Sensor
PFMV5 Series

How to Order

Measurement flow range (L/min)

0.0 to 0.1
0.0 to 0.5
0.0 to 1.0
0.0 to 3.0
–0.5 to 0.5
–1.0 to 1.0
–3.0 to 3.0

PFMV505 – 1 – □□ – X502

PFMV5 05 – 1 – □□

Measurement flow range

05	0.0 to 0.5 L/min
10	0.0 to 1.0 L/min
30	0.0 to 3.0 L/min
05F	–0.5 to 0.5 L/min
10F	–1.0 to 1.0 L/min
30F	–3.0 to 3.0 L/min

Output specifications

1	Analog output (1 to 5 V)

Operation manual

Nil	With operation manual (Japanese and English)
N	None

Option (Shipped together)

Nil	None
A	With L-type bracket 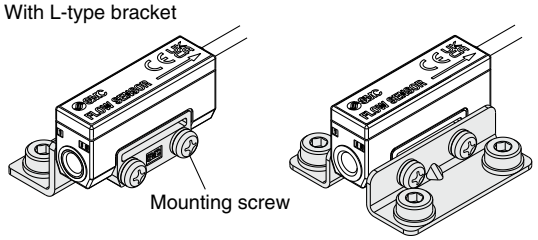

∗ 2 L-type brackets (with 2 mounting screws) are included.

Option/Part Nos.

If a single option or manifold mounting are required, order sensors with the part numbers below separately.

Part no.	Stations	Note
ZS-36-A1	For 1 station (for single unit)	2 L-type brackets, 2 mounting screws M3 x 15L
ZS-36-A2	For 2 stations	2 L-type brackets, 2 mounting screws M3 x 25L
ZS-36-A3	For 3 stations	2 L-type brackets, 2 mounting screws M3 x 35L
ZS-36-A4	For 4 stations	2 L-type brackets, 2 mounting screws M3 x 45L
ZS-36-A5	For 5 stations	2 L-type brackets, 2 mounting screws M3 x 55L

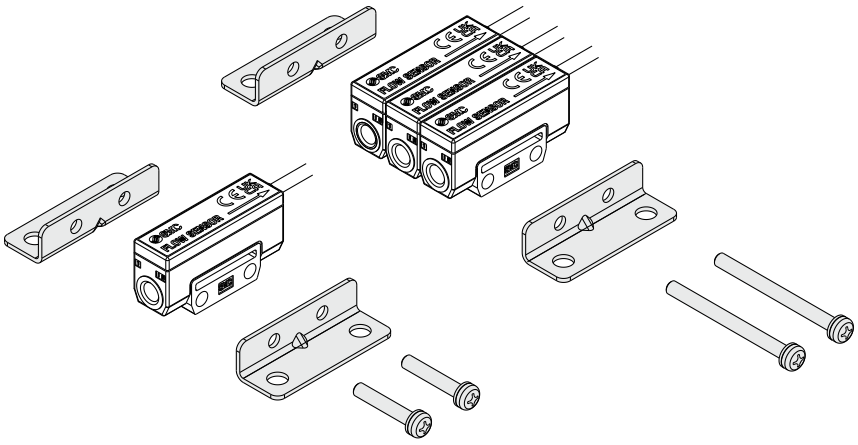

Specifications

For flow switch precautions and specific product precautions, refer to the "Operation Manual" on the SMC website.

Model		PFMV505-X502	PFMV505	PFMV510	PFMV530	PFMV505F	PFMV510F	PFMV530F
Applicable fluid		Dry air, N_2						
		(JIS B 8392-1 1.1.2 to 1.6.2: 2003, ISO 8573-1 1.1.2 to 1.6.2)						
Rated flow range (Flow rate range)[*1]		0 to 0.1 L/min	0 to 0.5 L/min	0 to 1 L/min	0 to 3 L/min	–0.5 to 0.5 L/min[*2]	–1 to 1 L/min[*2]	–3 to 3 L/min[*2]
Accuracy		±5% F.S.[*3]						
Repeatability		±2 F.S.[*3]						
Pressure characteristics (0 kPa reference[*4])		±2% F.S. (0 to 300 kPa) ±5% F.S. (–70 to 0 kPa)						
Temperature characteristics (25°C reference)		±2% F.S. (15 to 35°C) ±5% F.S. (0 to 50°C)						
Rated pressure range[*5]		–70 kPa to 300 kPa						
Operating pressure range[*6]		–100 kPa to 400 kPa						
Proof pressure		500 kPa						
Analog output (Non-linear output)		Voltage output: 1 to 5 V, Output impedance: Approx. 1 kΩ						
Response time		5 ms or less (90% response)						
Power supply voltage		12 to 24 VDC ± 10% (With polarity protection)						
Current consumption		16 mA or less						
Environ-ment	**Enclosure**	IP40						
	Fluid temperature	0 to 50°C (No freezing and condensation)						
	Operating temperature range	0 to 50°C (No freezing and condensation)						
	Stored temperature range	–10 to 60°C (No freezing and condensation)						
	Operating humidity range	35 to 85% R.H. (No condensation)						
	Stored humidity range	35 to 85% R.H. (No condensation)						
	Withstand voltage	1000 VAC for 1 minute between terminals and housing						
	Insulation resistance	50 MΩ or more (500 VDC measured via megohmmeter) between terminals and housing						
	Port size	M5 x 0.8 (Tightening torque: Approx. 0.5 to 1.0 N·m)						
	Wetted parts material	PPS, Si, Au, Stainless steel 316, C3604 (Electroless nickel plating)						
Standards		CE/UKCA marking, UL (CSA)						
Lead wire		Vinyl cabtire cord, 3 cores ø2.6, 0.15 mm^2, 2 m						
Weight		10 g (Excluding lead wire)						

*1 The flow rate given in the specifications is the value under standard conditions.
*2 Analog output indicates 3 V when the flow rate is 0. When the flow direction is from IN to OUT, the output is changed to 5 V, and when it's from OUT to IN, the output is changed to 1 V.
*3 The unit % F.S. is based on the full scale of analog 4 V (1-5 V).
*4 0 kPa indicates the atmospheric release.
*5 Pressure range that satisfies the product specifications
*6 Applicable pressure range
*For wiring, refer to the "Operation Manual" on the SMC website.
*Products with tiny scratches, marks, or display color or brightness variations which do not affect the performance of the product are verified as conforming products.

Internal Circuits and Wiring Examples

-1
Analog voltage output

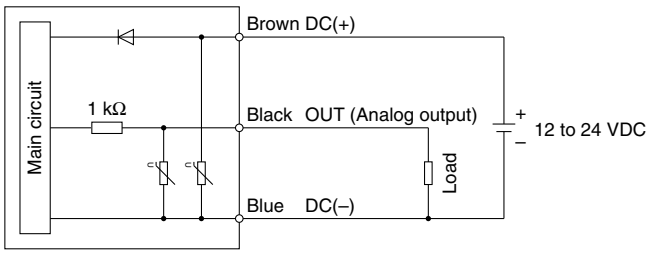

Lead Wire Specifications

Conductor	**Nominal cross section area**	AWG26
	External diameter	0.58 mm
Insulator	**External diameter**	0.88 mm
	Colors	Brown, Blue, Black
Sheath	**Material**	Oil-resistant/Heat-resistant PVC
Finished external diameter		2.6

Recommended Pneumatic Circuits

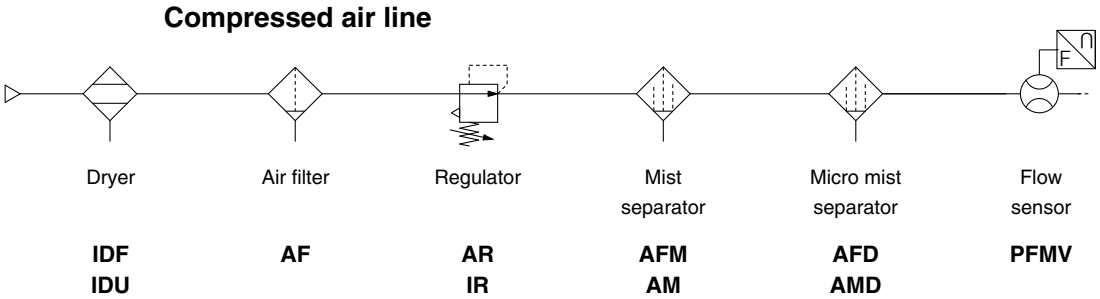

Recommended Fittings

One-touch Fitting/KQ2 Series

Type	Tubing O.D. [mm]	Port size	Model
Male connector	4	M5 x 0.8	KQ2H04-M5A
Male elbow			KQ2L04-M5A

Miniature Fitting/M Series

Type	Tubing O.D. [mm]	Port size	Model
Barb fitting for nylon tube	4	M5 x 0.8	M-5AN-4
	6		M-5AN-6

Compact Suction Filter p. 12

Part no.	Connection type
ZFC050-M5X68	IN/OUT: M5
ZFC050-AU6X68	IN: ø6 barb fitting OUT: M5
ZFC-EL013-A	Element (10 pcs.)

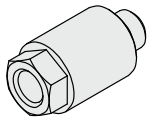

ZFC050-M5X68

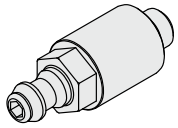

ZFC050-AU6X68

Wetted Parts Construction

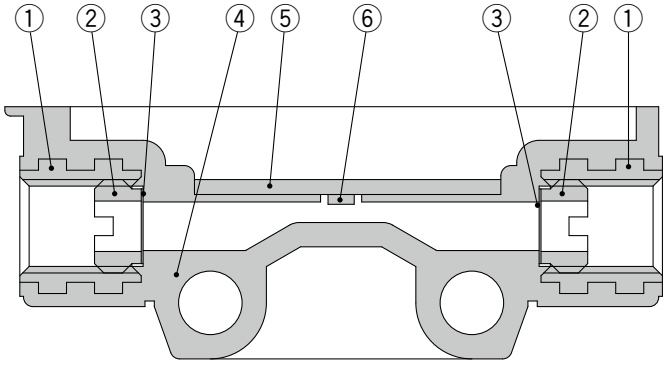

Component Parts

No.	Description	Material
1	**Fitting for piping**	C3604 (Electroless nickel plating)
2	**Mesh holding screw**	
3	**Mesh**	Stainless steel 316
4	**Body**	PPS
5	**Print circuit board**	GE4F
6	**Sensor chip**	Si, Au

Detection Principle

This MEMS sensor chip consists of upstream temperature measuring sensor (Ru) and downstream temperature measuring sensor (Rd), which are placed symmetrically from the center of a platinum thin film coated heater (Rh) mounted on a membrane, and an ambient temperature sensor (Ra) for measuring gas temperature.
The principle is shown as the diagram on the right. (a) When the gas is static, the temperature distribution of heated gas centered around Rh is uniform, and Ru and Rd have the same resistance. (b) When the gas flows from the left side, it upsets the balance of the temperature distribution of heated gas, and the resistance of Rd becomes greater than that of Ru.
The difference in resistance between Ru and Rd is proportional to the flow velocity, so measurement and analysis of the resistance can show the flow direction and velocity of the gas.
Ra is used to compensate the gas and/or ambient temperature.

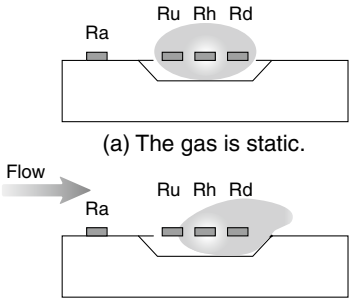

(a) The gas is static.

(b) The gas flows from the left side.

Analog Output (Non-linear output)

PFMV505-1-X502

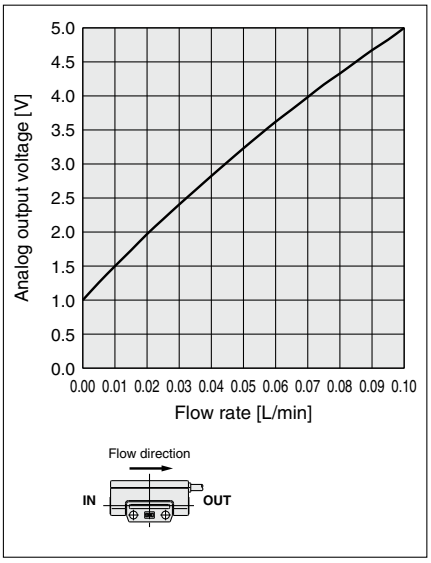

PFMV505-1

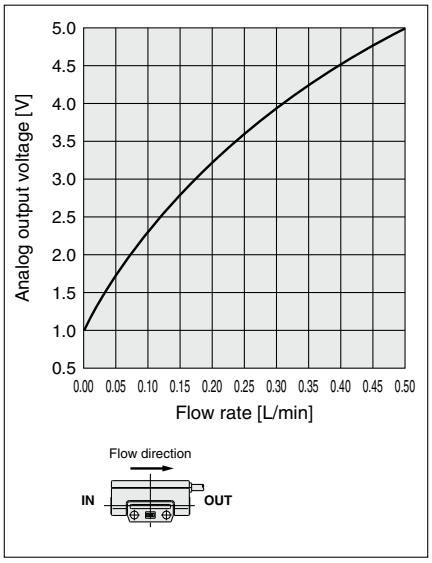

PFMV510-1

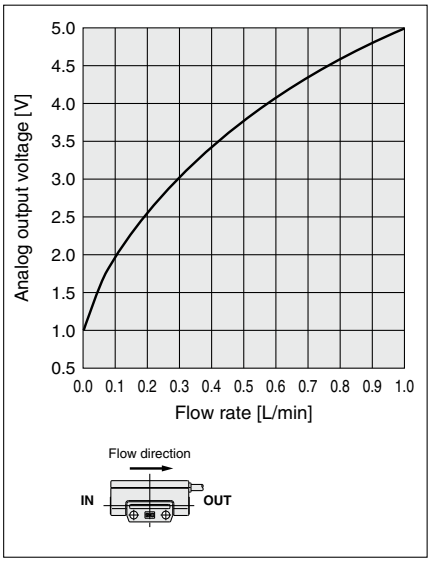

PFMV530-1

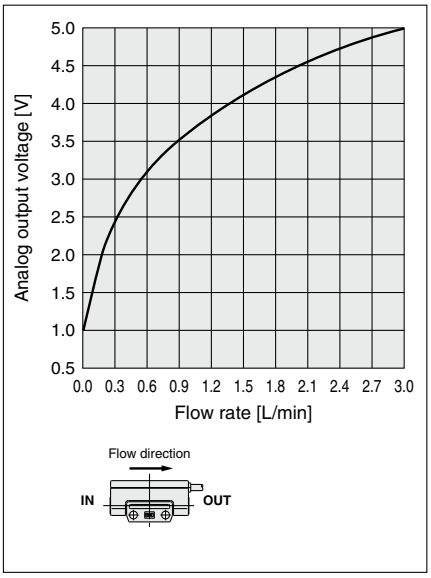

PFMV505F-1

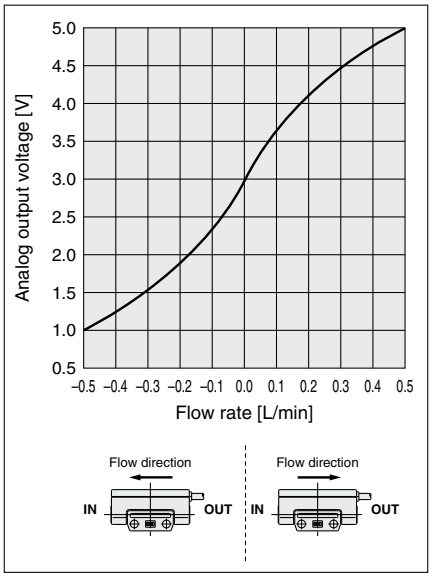

PFMV510F-1

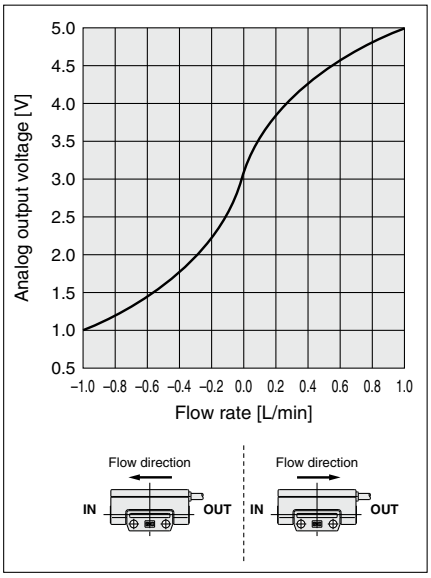

PFMV530F-1

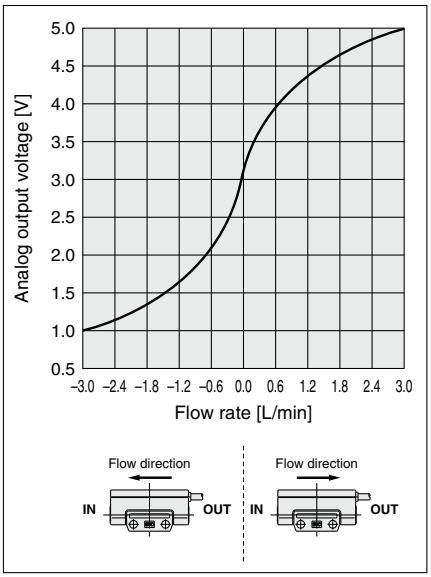

∗ Use these graphs as a reference for calculating the flow rate value.
∗ Due to slight differences between individual products, the values may not match the values shown in the graphs. Confirm with the actual product before use.

Pressure Loss (Reference Data)

PFMV505(F)-1(-X502)

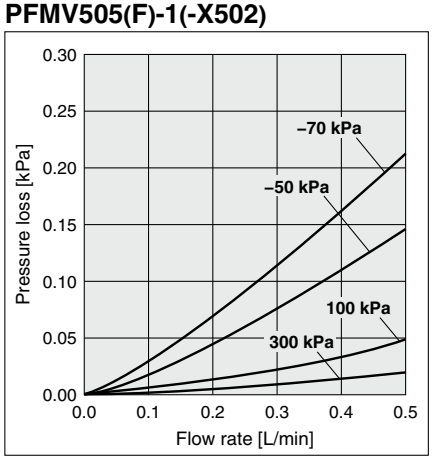

PFMV510(F)-1

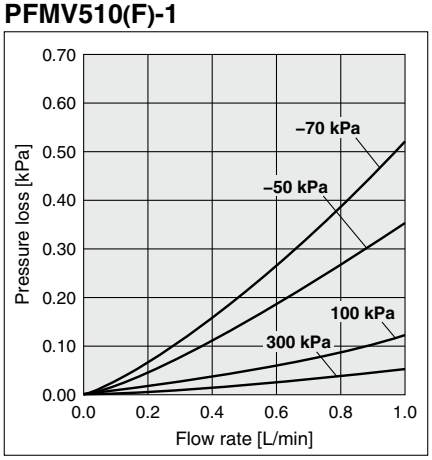

PFMV530(F)-1

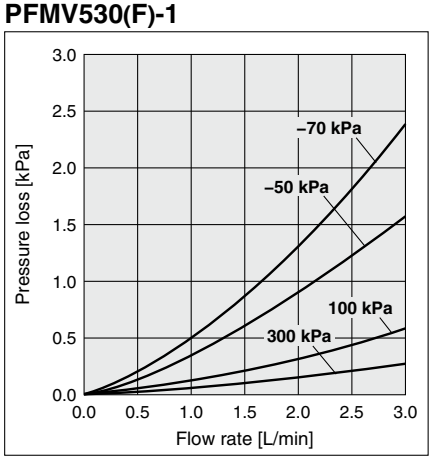

Dimensions

PFMV5□□-1
PFMV5□□F-1

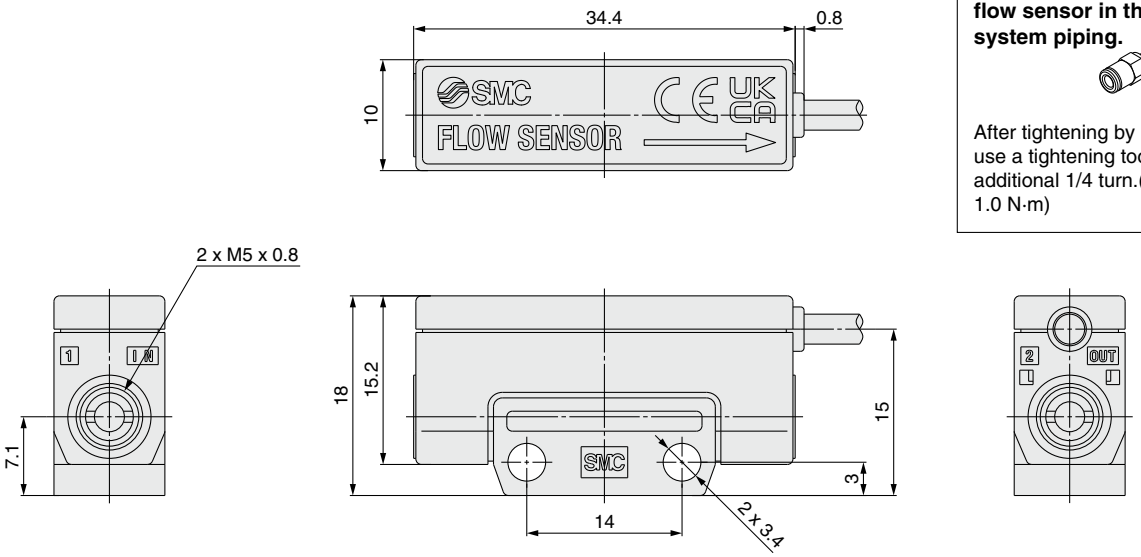

⚠ Caution

Apply a wrench only to the designated part when installing the flow sensor in the system piping.

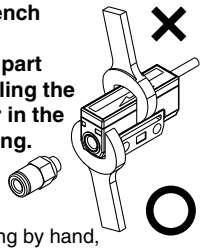

After tightening by hand, use a tightening tool to tighten an additional 1/4 turn.(Approx. 0.5 to 1.0 N·m)

One-side bracket

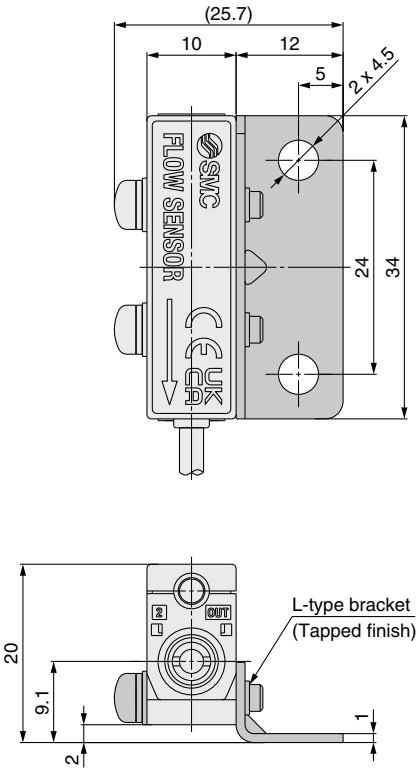

Both-side bracket

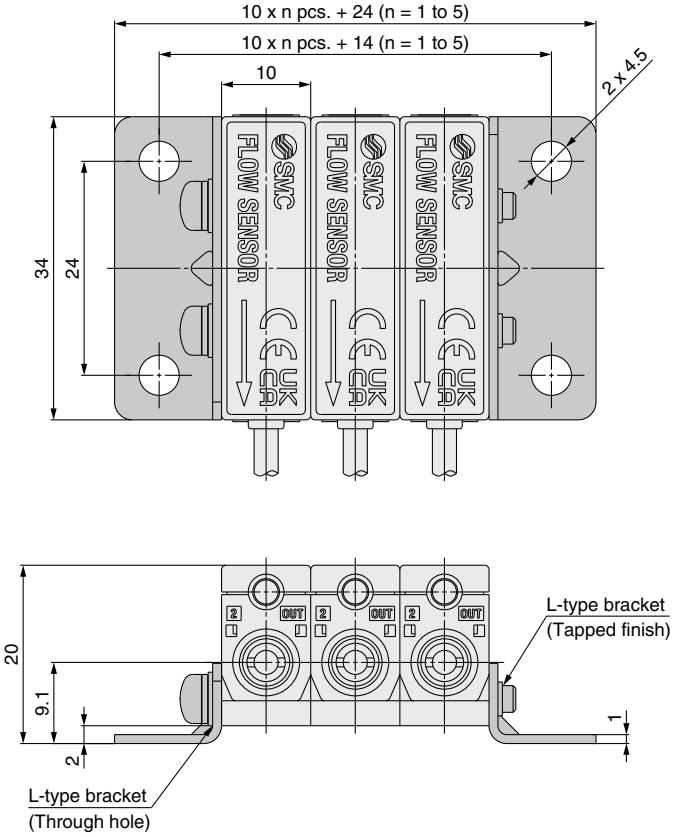

The dimensions show the PFMV5□□-1. The PFMV5□□F-1 has the same dimensions.

ZFC050
Related Equipment

Compact Suction Filter

ZFC050-M5X68

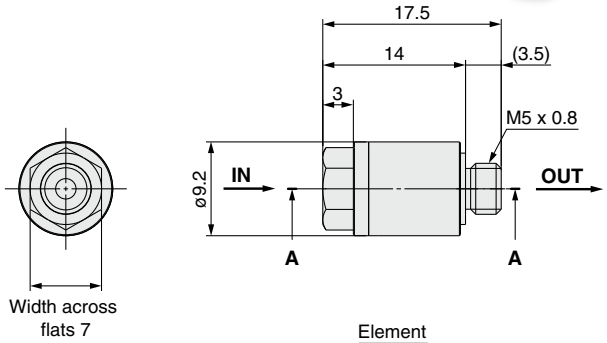

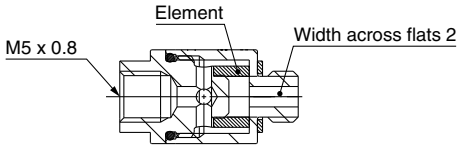

Section diagram A-A

ZFC050-AU6X68

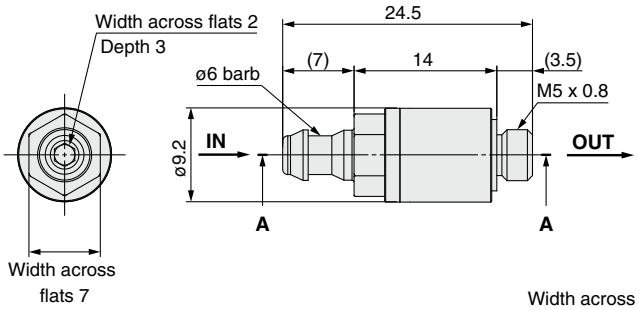

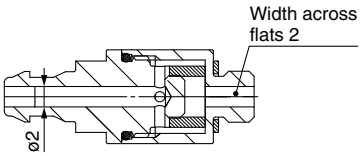

Section diagram A-A

Example of mounting to the flow sensor PFMV series (For suction verification)

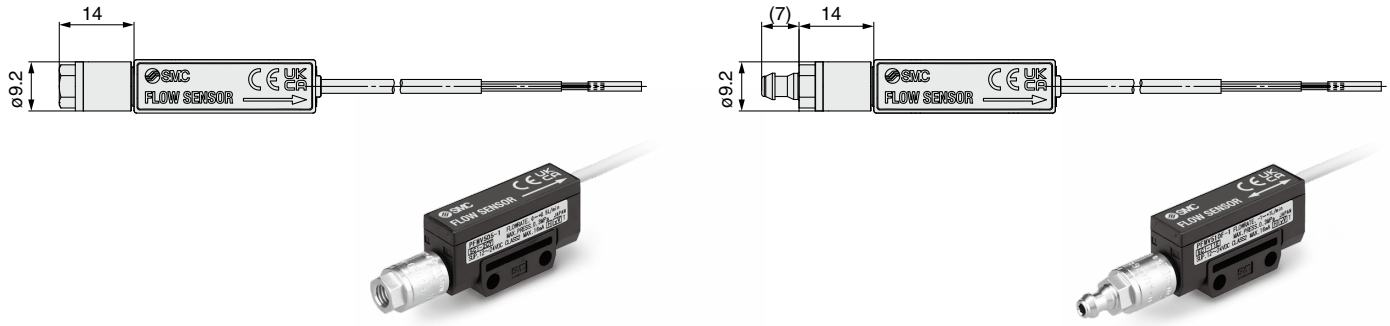

Specifications

Filtration degree	3 µm (Nominal)
Fluid	Air
Operating pressure range	–100 to 600 kPa
Ambient temperature	0 to 60°C (No freezing)
Applicable tubing material	Soft nylon, Polyurethane
Applicable tubing O.D./I.D.	ø6/ø4

Replacement element part no.···ZFC-EL013-A

⚠Caution

1. To screw in OUT side port (M5 male thread), tighten by hand before giving it an additional 1/4 turn with a tightening tool.
2. When replacing the element, remove the IN side body using the hexagon surface on the IN side, then replace the element. After replacing the element, tighten the IN side body with the tightening torque 0.5 to 0.7 N·m.
3. As a rule, replace the element when the pressure drops by 20 kPa.
4. The response time of the single flow sensor is 5 msec. However, take great care since the response may be delayed depending on the element clogged conditions.

3-Screen Display

Digital Flow Monitor
PFGV301 Series

How to Order

PFGV 3 0 1 – RT – M – L □ □ □

Type

3	Remote type monitor unit

Input specification

Symbol	Description	Applicable flow switch model
0	Voltage input	PFMV5 series

Output specification

RT	2 outputs (NPN/PNP switching type) + Analog voltage output*1, 2
SV	2 outputs (NPN/PNP switching type) + Analog current output*2
XY	2 outputs (NPN/PNP switching type) + Copy function

*1 Can switch between 1 to 5 V and 0 to 10 V
*2 Can be switched to external input or copy function

Unit specification

Nil	Unit selection function*3
M	SI unit only*4

*3 This product is for overseas use only. (The SI unit type is provided for use in Japan in accordance with the New Measurement Act.)
*4 Fixed units: Instantaneous flow: L/min
Accumulated flow: L

Option 1

Symbol	Description	
Nil	Without lead wire	
L	Power supply/output connection lead wire (Lead wire length: 2 m)	ZS-46-5L 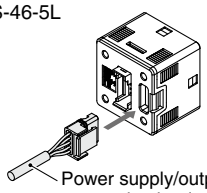

Option 2

Symbol	Description	
Nil	None	
A1	Bracket A (Vertical mounting)	ZS-46-A1 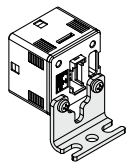
A2	Bracket B (Horizontal mounting)	ZS-46-A2 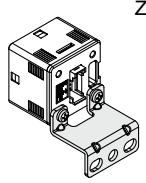
B	Panel mount adapter	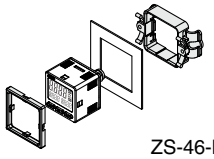 ZS-46-B
D	Panel mount adapter + Front protection cover	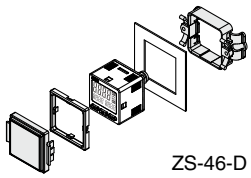 ZS-46-D

Option 3

Nil	None
C	ZS-28-C 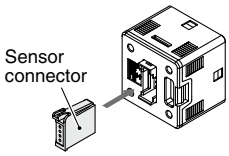

Option 4

	Operation manual	Calibration certificate
Nil	○	—
Y	—	—
K	○	○
T	—	○

Options/Part Nos.

When only optional parts are required, order with the part numbers listed below.

Part no.	Option	Note
ZS-28-C	Sensor connector	For PFMV5□
ZS-46-A1	Bracket A	Tapping screw: Nominal size 3 x 8 L (2 pcs.)
ZS-46-A2	Bracket B	Tapping screw: Nominal size 3 x 8 L (2 pcs.)
ZS-46-B	Panel mount adapter	
ZS-46-D	Panel mount adapter + Front protection cover	
ZS-46-5L	Power supply/output connection lead wire	5-core, 2 m
ZS-27-01	Front protection cover	
ZS-28-A-X538	PFMV30□ → PFGV301 conversion cable	Made to Order (Refer to page 21.)

Connection Example

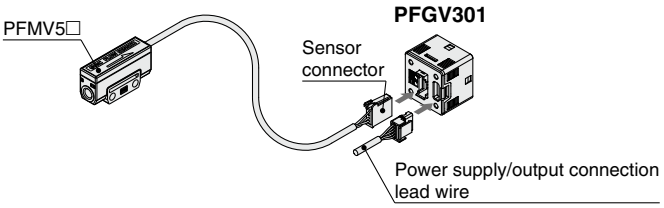

Specifications

For flow switch precautions and specific product precautions, refer to the "Operation Manual" on the SMC website.

Model			PFGV301 series						
Applicable flow sensor model			PFMV505-X502	PFMV505	PFMV510	PFMV530	PFMV505F	PFMV510F	PFMV530F
Voltage	**Rated voltage range**		1.00 to 5.00 V						
	Set voltage range		0.80 to 5.20 V						
	Smallest settable increment		0.01 V						
Flow	**Rated flow range**∗1		0 to 0.1 L/min	0 to 0.5 L/min	0 to 1 L/min	0 to 3 L/min	–0.5 to 0.5 L/min	–1 to 1 L/min	–3 to 3 L/min
	Set point range		–0.005 to 0.105 L/min	–0.025 to 0.525 L/min	–0.05 to 1.05 L/min	–0.15 to 3.15 L/min	–0.525 to 0.525 L/min	–1.05 to 1.05 L/min	–3.15 to 3.15 L/min
	Smallest settable increment		0.001 L/min		0.01 L/min		0.001 L/min	0.01 L/min	
Electrical	**Power supply voltage**		12 to 24 VDC ±10% or less						
	Current consumption		25 mA or less						
	Protection		Polarity protection						
Accuracy∗2	**Display accuracy**		±0.5% F.S. ± Min. display unit (Ambient temperature at 25°C)						
	Analog output accuracy		±0.5% F.S. (Ambient temperature at 25°C)						
	Repeatability		±0.1% F.S. ± Min. display unit, Analog output: 0.3% F.S. or less						
	Temperature characteristics		±0.5% F.S. (Ambient temperature: 0 to 50°C, 25°C standard)						
Switch output	**Output type**		Select from NPN or PNP open collector output.						
	Output mode		Select from Hysteresis, Window comparator, Error output, or Switch output OFF modes.						
	Switch operation		Select from Normal or Reversed output.						
	Max. load current		80 mA						
	Max. applied voltage		30 V (NPN output)						
	Internal voltage drop		NPN output: 1 V or less (at load current of 80 mA), PNP output: 1.5 V or less (at load current of 80 mA)						
	Response time∗3		3 ms or less						
	Delay time∗3		Select from 0, 0.05 to 0.10 s (increments of 0.01 s), 0.1 to 1.0 s (increments of 0.1 s), 1 to 10 s (increments of 1 s), 20 s, 30 s, 40 s, 50 s, or 60 s.						
	Hysteresis∗4		Variable from 0						
	Protection		Short circuit protection						
Analog output∗5	**Output type**		Voltage output: 1 to 5 V (0 to 10 V can be selected only when the power supply voltage is 24 VDC)∗6, Current output: 4 to 20 mA						
	Impedance	**Voltage output**	Output impedance: 1 kΩ						
		Current output	Max. load impedance: 300 Ω (at power supply voltage of 12 VDC), 600 Ω (at power supply voltage of 24 VDC)						
	Response time∗2		50 ms or less						
External input∗7	**Peak/Bottom value reset**	**Input type**	Input voltage: 0.4 V or less (Reed or Solid state) for 30 ms or longer						
		Input mode	Peak/Bottom value reset						
	Auto-shift input	**Input type**	Input voltage: 0.4 V or less (Reed or Solid state) for 5 ms or longer						
		Input mode	Select from Auto-shift or Auto-shift zero.						
Sensor input	**Input type**		Voltage input: 1 to 5 VDC (Input impedance: 1 MΩ)						
	Connection method		Connector (e-CON)						
	Protection		Over voltage protection (Up to 26.4 VDC)						
Display	**Display mode**		Instantaneous flow display						
	Unit∗8		L/min, cfm (ft³/h)						
	Display range	**Voltage**	0.80 to 5.20 V						
		Flow	–0.005 to 0.105 L/min	–0.025 to 0.525 L/min	–0.05 to 1.05 L/min	–0.15 to 3.15 L/min	–0.525 to 0.525 L/min	–1.05 to 1.05 L/min	–3.15 to 3.15 L/min
	Min. display unit	**Voltage**	0.01 V						
		Flow	0.001 L/min		0.01 L/min		0.001 L/min	0.01 L/min	
	Display type		LCD						
	Number of displays		3-screen display (Main screen, Sub screen)						
	Display color		1) Main screen: Red/Green, 2) Sub screen: Orange						
	Number of display digits		1) Main screen: 5 digits (7 segments), 2) Sub screen: 9 digits (7 segments)						
	Indicator LED		LED ON when switch output is ON. OUT1/2: Orange						
Digital filter∗9			Select from 0, 0.05 to 0.10 s (increments of 0.01 s), 0.1 to 1.0 s (increments of 0.1 s), 1 to 10 s (increments of 1 s), 20 s, or 30 s.						
Environmental resistance	**Enclosure**		IP40						
	Withstand voltage		1000 VAC for 1 min between terminals and housing						
	Insulation resistance		50 MΩ or more (500 VDC measured via megohmmeter) between terminals and housing						
	Operating temperature range		Operating: 0 to 50°C, Stored: –10 to 60°C (No condensation or freezing)						
	Operating humidity range		Operating/Stored: 35 to 85% RH (No condensation or freezing)						
Standards			CE/UKCA marking						
Weight	**Body**		25 g (Excluding the power supply/output connection lead wire)						
	Lead wire with connector		+39 g						

∗1 Rated flow range of the applicable flow sensor. The flow rate stated in the specifications is for under normal conditions (20°C, 101.3 kPa (absolute pressure), 65% R.H.).
∗2 The accuracy is with respect to the voltage display. When the flow rate display function is selected, the repeatability and display accuracy should be exactly like the graph on page 15.
∗3 Value without digital filter (at 0 ms)
∗4 If the flow fluctuates around the set value, be sure to keep a sufficient margin. Otherwise, chattering will occur.
∗5 Setting is only possible for models with analog output.
∗6 When selecting 0 to 10 V, refer to the analog output graph for the allowable load current.
∗7 Setting is only possible for models with external input.
∗8 Setting is only possible for models with the unit selection function.
∗9 The response time indicates when the set value is 90% in relation to the step input.
∗ Products with tiny scratches, marks, or display color or brightness variations which do not affect the performance of the product are verified as conforming products.

Display Accuracy and Repeatability when Combined with PFMV5. (Calculation Example)

PFMV530-1

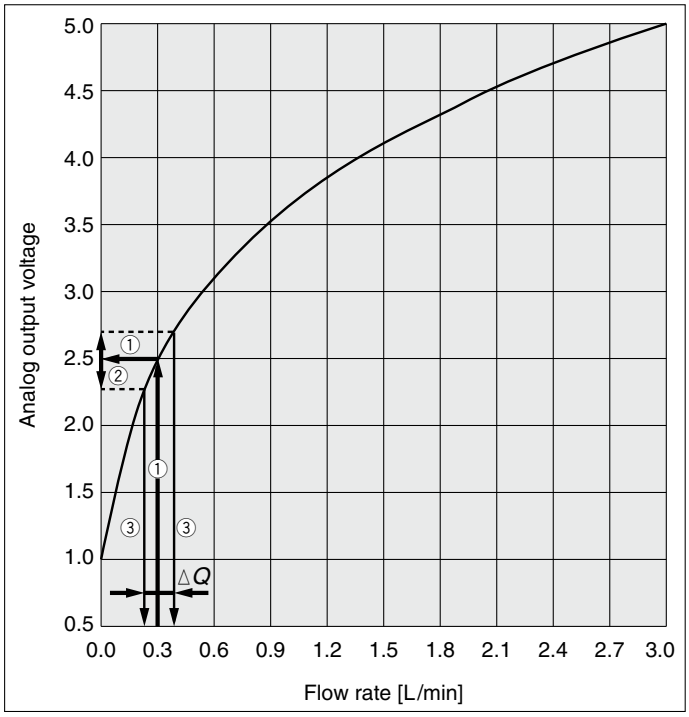

When the flow rate display function for the PFGV301 series is selected, calculate the repeatability from the analog output characteristics graph (page 9).

Example) For PFMV530-1 (0 to 0.3 L/min)

① When the actual flow rate is 0.3 L/min, the PFMV530-1 outputs approximately 2.5 V of analog voltage (Arrow ① in the graph on the left).

② The PFMV5 series has a repeatability of ±2% F.S. (±80 mV) (Arrow ② in the graph on the left).

③ When this accuracy is converted to a flow rate, it becomes approximately ±3% F.S. (±0.09 L/min), and this width becomes the repeatability when the flow rate is displayed (arrow ③, and the width of △ Q, in the graph on the left).

The flow rate display accuracy can be also calculated from the PFMV5 series accuracy (±5% F.S.).

Settable Range and Voltage Input Range

The settable rate range is the range that can be set in the switch.
The inputtable range is the range that satisfies the switch specifications (accuracy, linearity, etc.).
It is possible to set a value outside of the inputtable range if it is within the settable range, however, the specification is not guaranteed.

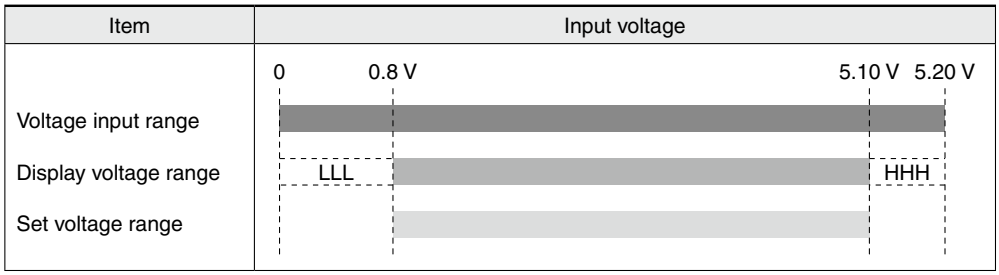

The settable rate range is the flow range that can be set in the switch.
The rated flow range is the flow rate range that satisfies the switch specifications (accuracy, linearity, etc.).
It is possible to set a value outside of the rated flow range if it is within the settable range, however, the specification is not guaranteed.

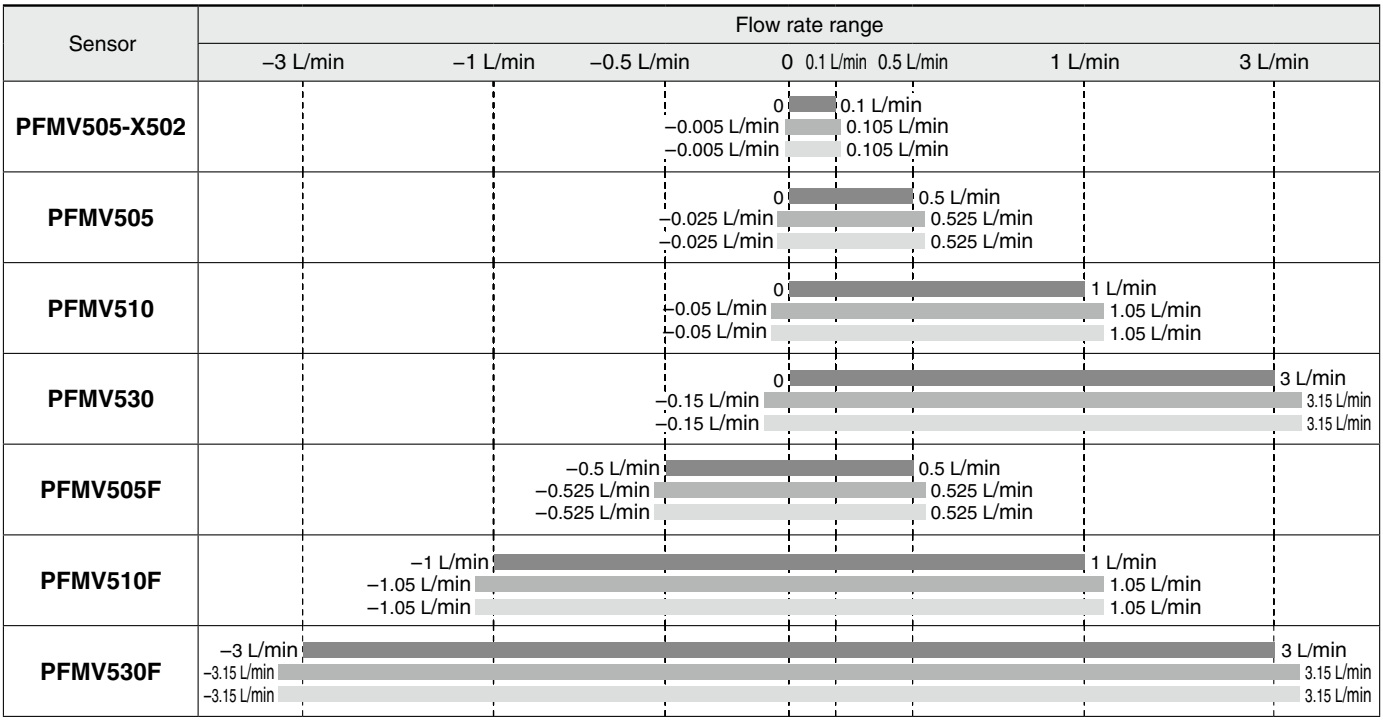

The values shown on the graph are the displayed flow rate range and set flow rate range when PFMV5 series and PFGV301 series are connected.

Rated flow range
Displayable flow range
Settable range

Internal Circuits and Wiring Examples

-XY
-RT
-SV
NPN (2 outputs) + Copy function

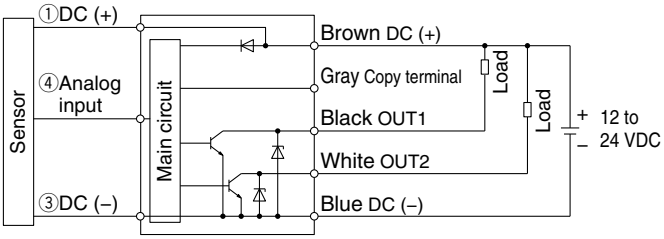

-XY
-RT
-SV
PNP (2 outputs) + Copy function

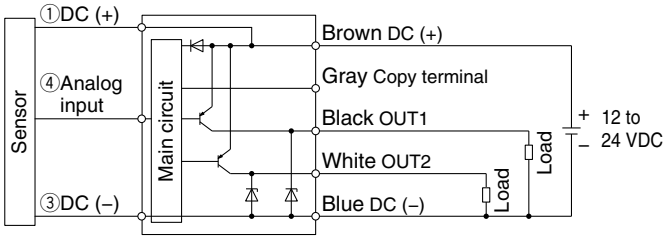

-RT: NPN (2 outputs) + Analog voltage output
-SV: NPN (2 outputs) + Analog current output

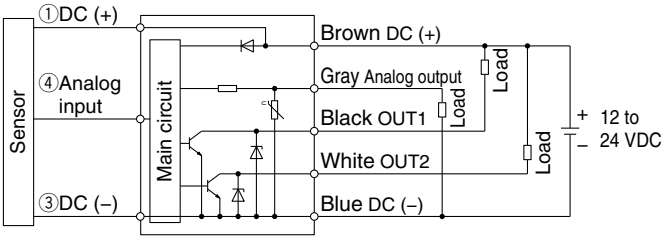

-RT: PNP (2 outputs) + Analog voltage output
-SV: PNP (2 outputs) + Analog current output

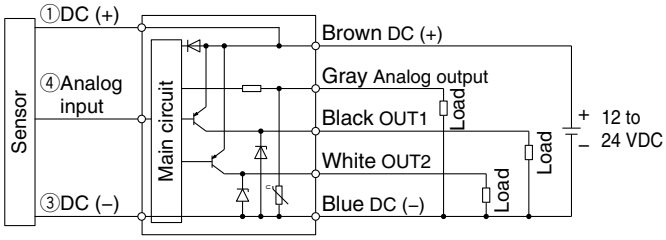

-RT: NPN (2 outputs) + External input
-SV: NPN (2 outputs) + External input

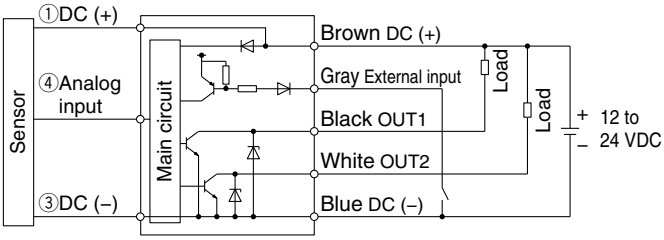

-RT: PNP (2 outputs) + External input
-SV: PNP (2 outputs) + External input

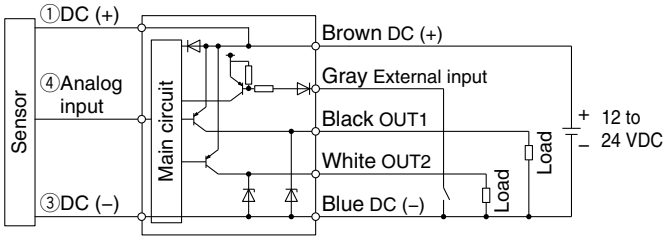

Dimensions

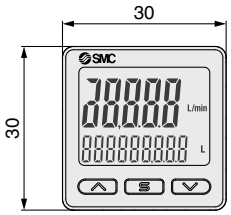

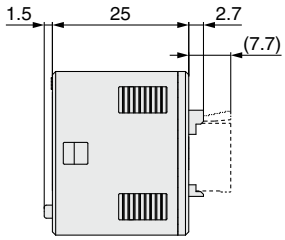

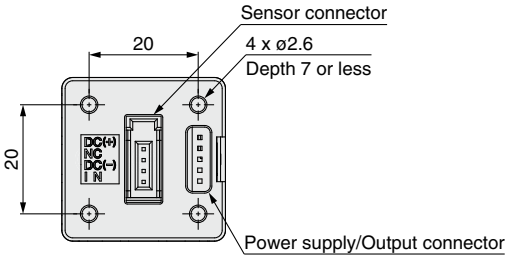

Bracket A
(Part no.: ZS-46-A1)

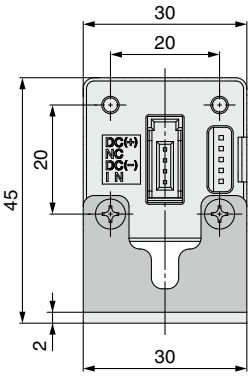

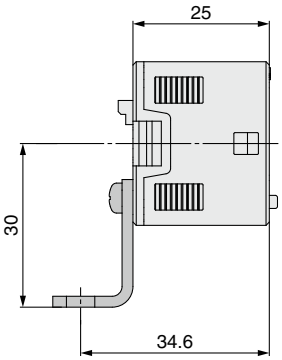

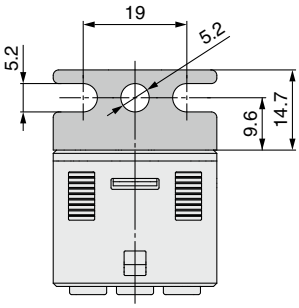

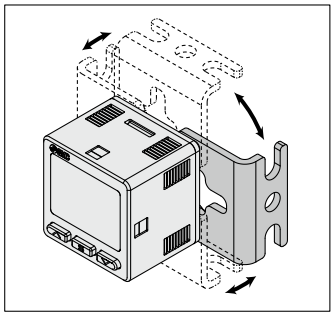

∗ Bracket configuration allows for mounting in four orientations.

Bracket B
(Part no.: ZS-46-A2)

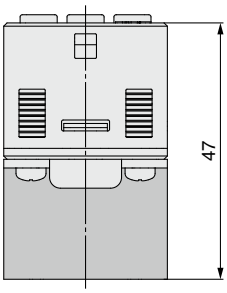

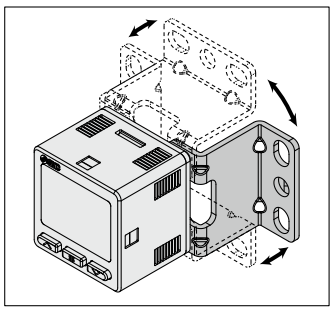

∗ Bracket configuration allows for mounting in four orientations.

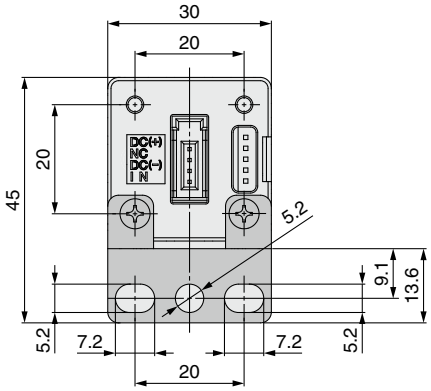

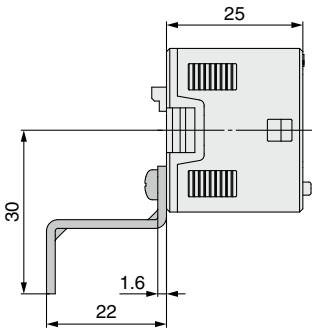

Dimensions

Panel mount adapter
(Part no.: ZS-46-B)

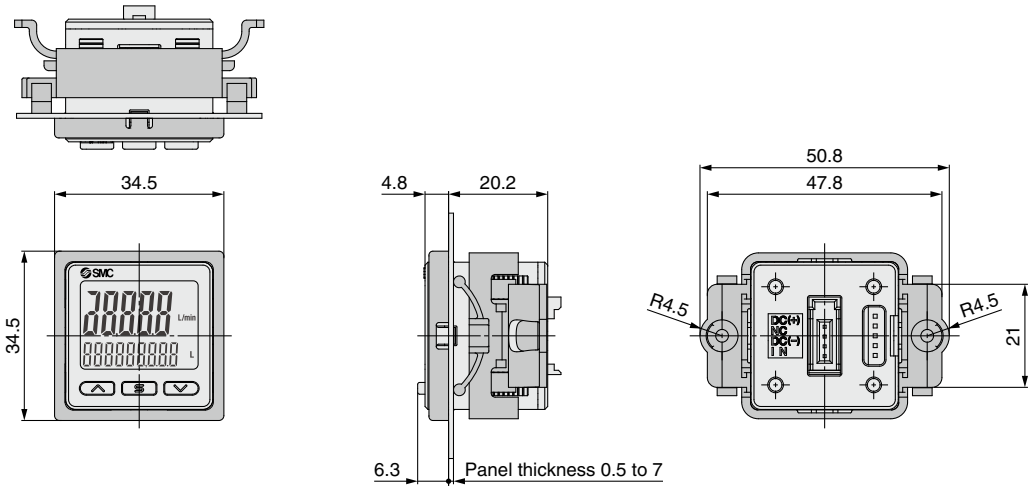

Panel mount adapter + Front protection cover
(Part no.: ZS-46-D)

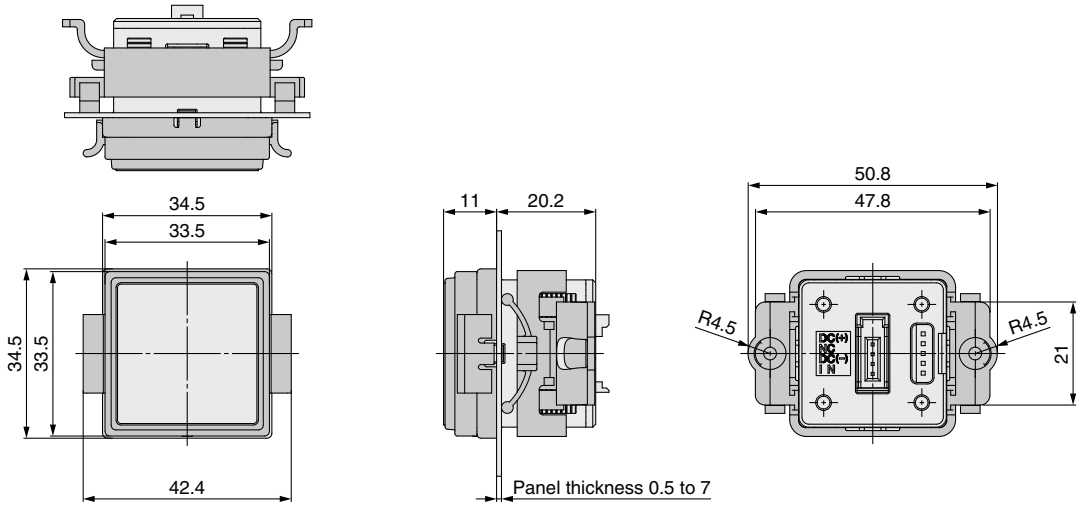

Power supply/output connection lead wire
(Part no.: ZS-46-5L)

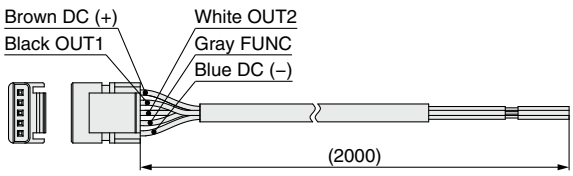

Sensor connector
(Part no.: ZS-28-CA)

Pin no.	Terminal
1	DC (+)
2	N.C.
3	DC (–)
4	IN*1

*1 1 to 5 V

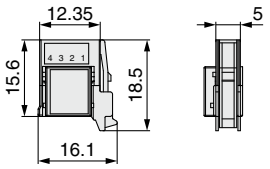

Cable Specifications

Conductor cross section		0.15 mm² (AWG26)
Insulator	**Outside diameter**	1.0 mm
	Color	Brown, Blue, Black, White, Gray (5-core)
Sheath	**Finished outside diameter**	ø3.5

Dimensions

Panel fitting dimensions

Individual mounting

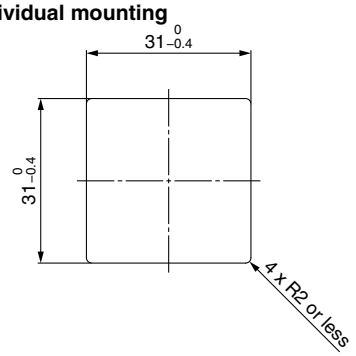

Multiple (2 pcs. or more) secure mounting
<Horizontal>

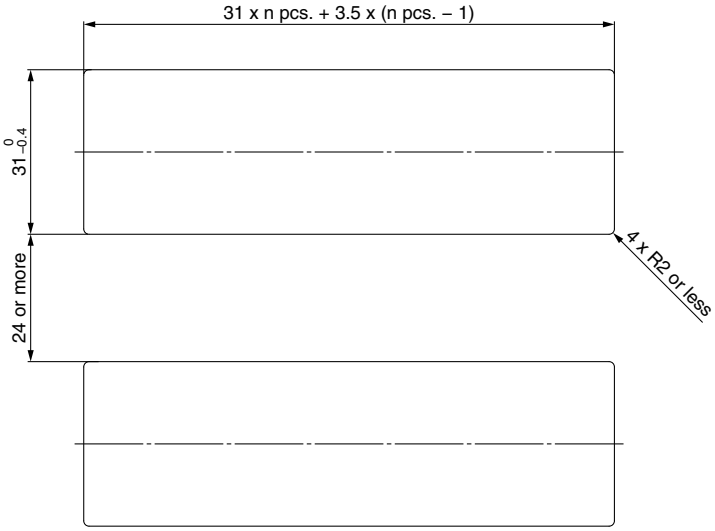

Panel mount example
<Horizontal>

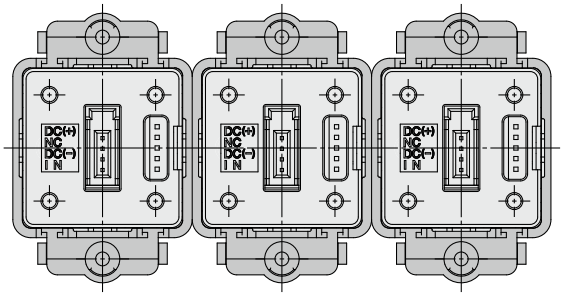

<Vertical>

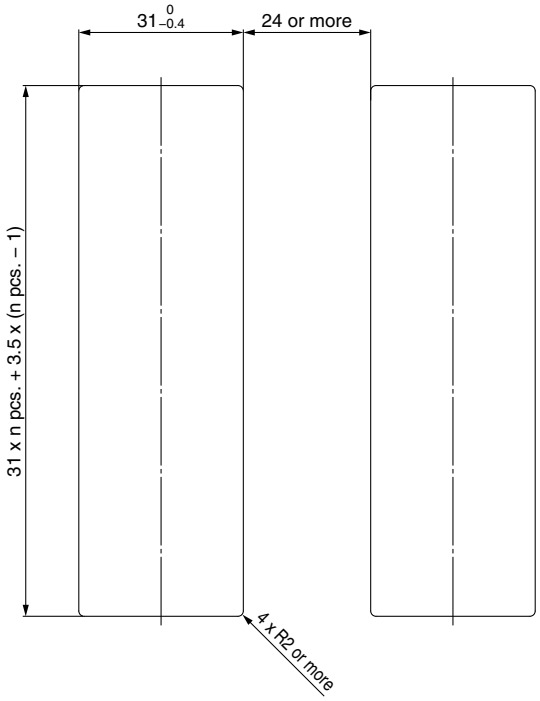

Panel mount example
<Vertical>

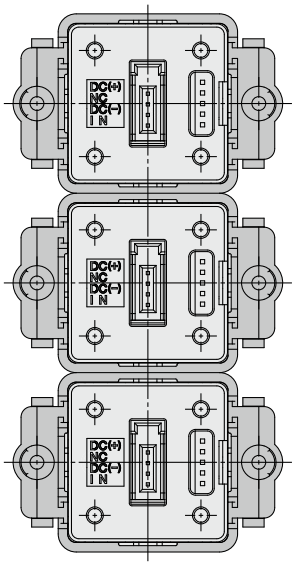

PFGV301 Series
Made to Order

Made to Order

Please contact SMC for detailed dimensions, specifications, and delivery times.

1 Conversion Cable for the PFMV30□ Lead Wire with Connector

The conversion cable allows for connection between the existing PFMV30□ lead wire with connector and the PFGV301.

PFMV30□ → PFGV301 + Conversion Cable Correspondence Table

Existing flow monitor model	Output specification	① Flow monitor part no.	② Conversion cable part no.
PFMV300-□□□□-□□	NPN 2 outputs + 1–5 V outputs	PFGV301-RT-□-□□□□	ZS-28-A-X538
PFMV301-□□□□-□□	NPN 2 outputs + 4–20 mA output	PFGV301-SV-□-□□□□	
PFMV302-□□□□-□□	NPN 2 outputs + auto-shift input	PFGV301-XY-□-□□□□	
PFMV303-□□□□-□□	PNP 2 outputs + 1–5 V outputs	PFGV301-RT-□-□□□□	
PFMV304-□□□□-□□	PNP 2 outputs + 4–20 mA output	PFGV301-SV-□-□□□□	
PFMV305-□□□□-□□	PNP 2 outputs + auto-shift input	PFGV301-XY-□-□□□□	

ZS-28-A-X538

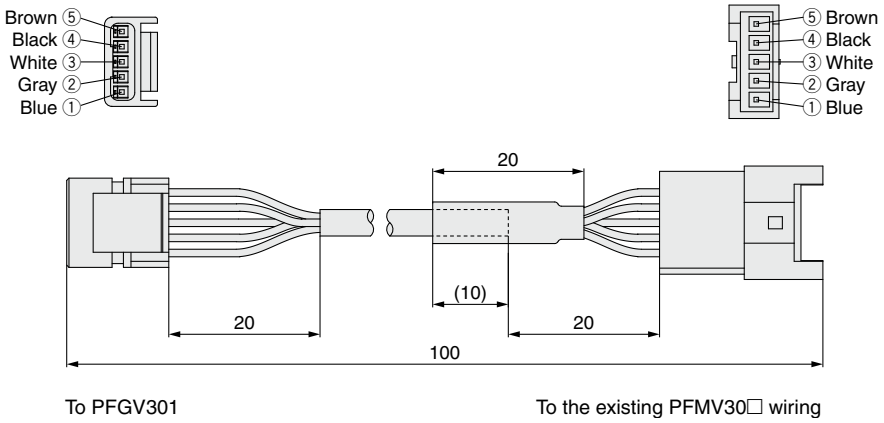

⚠ Safety Instructions

These safety instructions are intended to prevent hazardous situations and/or equipment damage. These instructions indicate the level of potential hazard with the labels of **"Caution," "Warning"** or **"Danger."** They are all important notes for safety and must be followed in addition to International Standards (ISO/IEC)*1), and other safety regulations.

⚠ Danger : **Danger** indicates a hazard with a high level of risk which, if not avoided, will result in death or serious injury.

⚠ Warning: **Warning** indicates a hazard with a medium level of risk which, if not avoided, could result in death or serious injury.

⚠ Caution: **Caution** indicates a hazard with a low level of risk which, if not avoided, could result in minor or moderate injury.

*1) ISO 4414: Pneumatic fluid power - General rules and safety requirements for systems and their components
ISO 4413: Hydraulic fluid power - General rules and safety requirements for systems and their components
IEC 60204-1: Safety of machinery - Electrical equipment of machines - Part 1: General requirements
ISO 10218-1: Robots and robotic devices - Safety requirements for industrial robots - Part 1:Robots
etc.

⚠ Warning

1. The compatibility of the product is the responsibility of the person who designs the equipment or decides its specifications.

Since the product specified here is used under various operating conditions, its compatibility with specific equipment must be decided by the person who designs the equipment or decides its specifications based on necessary analysis and test results. The expected performance and safety assurance of the equipment will be the responsibility of the person who has determined its compatibility with the product. This person should also continuously review all specifications of the product referring to its latest catalog information, with a view to giving due consideration to any possibility of equipment failure when configuring the equipment.

2. Only personnel with appropriate training should operate machinery and equipment.

The product specified here may become unsafe if handled incorrectly. The assembly, operation and maintenance of machines or equipment including our products must be performed by an operator who is appropriately trained and experienced.

3. Do not service or attempt to remove product and machinery/equipment until safety is confirmed.

1. The inspection and maintenance of machinery/equipment should only be performed after measures to prevent falling or runaway of the driven objects have been confirmed.
2. When the product is to be removed, confirm that the safety measures as mentioned above are implemented and the power from any appropriate source is cut, and read and understand the specific product precautions of all relevant products carefully.
3. Before machinery/equipment is restarted, take measures to prevent unexpected operation and malfunction.

4. Our products cannot be used beyond their specifications. Our products are not developed, designed, and manufactured to be used under the following conditions or environments. Use under such conditions or environments is not covered.

1. Conditions and environments outside of the given specifications, or use outdoors or in a place exposed to direct sunlight.
2. Use for nuclear power, railways, aviation, space equipment, ships, vehicles, military application, equipment affecting human life, body, and property, fuel equipment, entertainment equipment, emergency shut-off circuits, press clutches, brake circuits, safety equipment, etc., and use for applications that do not conform to standard specifications such as catalogs and operation manuals.
3. Use for interlock circuits, except for use with double interlock such as installing a mechanical protection function in case of failure. Please periodically inspect the product to confirm that the product is operating properly.

⚠ Caution

We develop, design, and manufacture our products to be used for automatic control equipment, and provide them for peaceful use in manufacturing industries.
Use in non-manufacturing industries is not covered.
Products we manufacture and sell cannot be used for the purpose of transactions or certification specified in the Measurement Act.
The new Measurement Act prohibits use of any unit other than SI units in Japan.

Limited warranty and Disclaimer/ Compliance Requirements

The product used is subject to the following "Limited warranty and Disclaimer" and "Compliance Requirements".
Read and accept them before using the product.

Limited warranty and Disclaimer

1. The warranty period of the product is 1 year in service or 1.5 years after the product is delivered, whichever is first.*2)
   Also, the product may have specified durability, running distance or replacement parts. Please consult your nearest sales branch.
2. For any failure or damage reported within the warranty period which is clearly our responsibility, a replacement product or necessary parts will be provided.
   This limited warranty applies only to our product independently, and not to any other damage incurred due to the failure of the product.
3. Prior to using SMC products, please read and understand the warranty terms and disclaimers noted in the specified catalog for the particular products.

***2) Vacuum pads are excluded from this 1 year warranty.**
A vacuum pad is a consumable part, so it is warranted for a year after it is delivered.
Also, even within the warranty period, the wear of a product due to the use of the vacuum pad or failure due to the deterioration of rubber material are not covered by the limited warranty.

Compliance Requirements

1. The use of SMC products with production equipment for the manufacture of weapons of mass destruction (WMD) or any other weapon is strictly prohibited.
2. The exports of SMC products or technology from one country to another are governed by the relevant security laws and regulations of the countries involved in the transaction. Prior to the shipment of a SMC product to another country, assure that all local rules governing that export are known and followed.

Revision History

Edition B	∗ A flow rate display function has been added to the voltage monitor for the PFMV3. NS
Edition C	∗ Not available
Edition D	∗ The PFMV3 has been changed to the PFGV3. ∗ The PFMV505-X502 has been added.

⚠ Safety Instructions Be sure to read the "Handling Precautions for SMC Products" (M-E03-3) and "Operation Manual" before use.

SMC Corporation