Clamp Cylinder

ø40, ø50, ø63

New

RoHS

Weight 7% reduction

1.96 kg ▶ 1.82 kg

Compared with the existing CK1 series model, ø63, 150 mm stroke

3 types of clevis widths

12.5 mm **16.5 mm** **19.5 mm**

Possible to select depending on the application

Mounting dimensions are interchangeable with the existing CK1 series model.

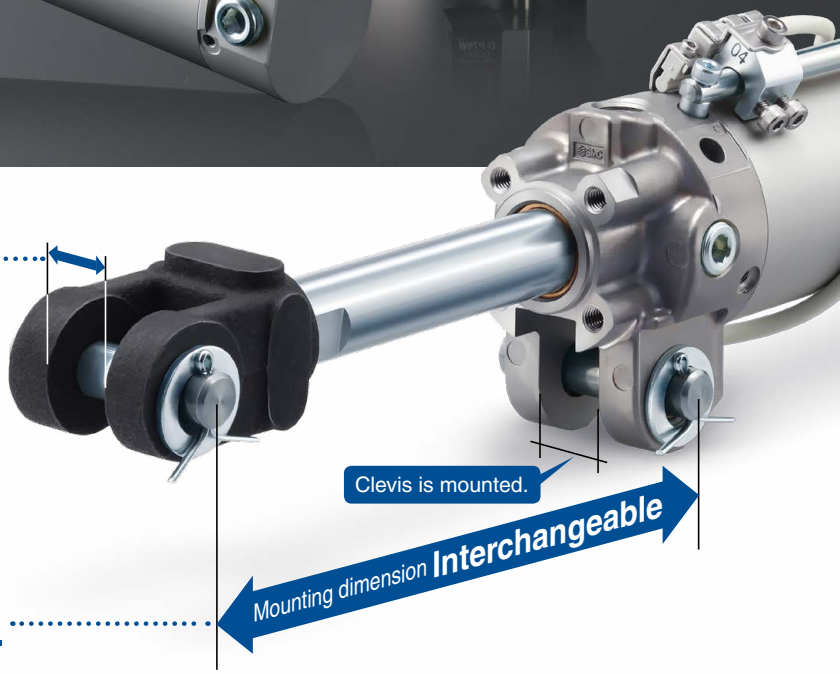

CK□1 Series

SMC

CAT.ES20-278A

Switch mounting rod and piping port are mountable in three orientations.

Top side

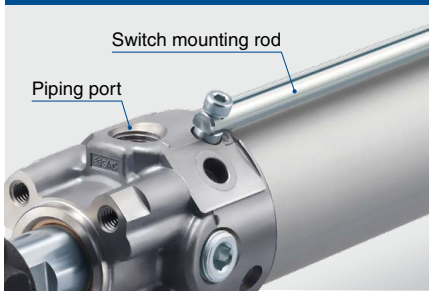

Right side

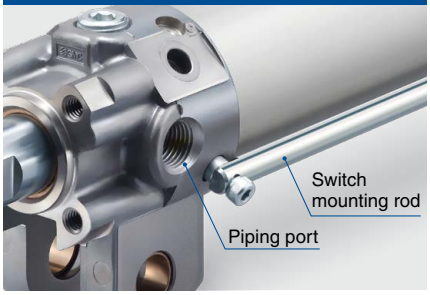

Left side

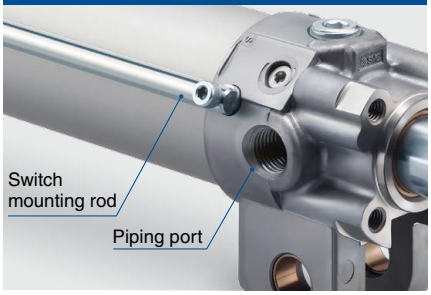

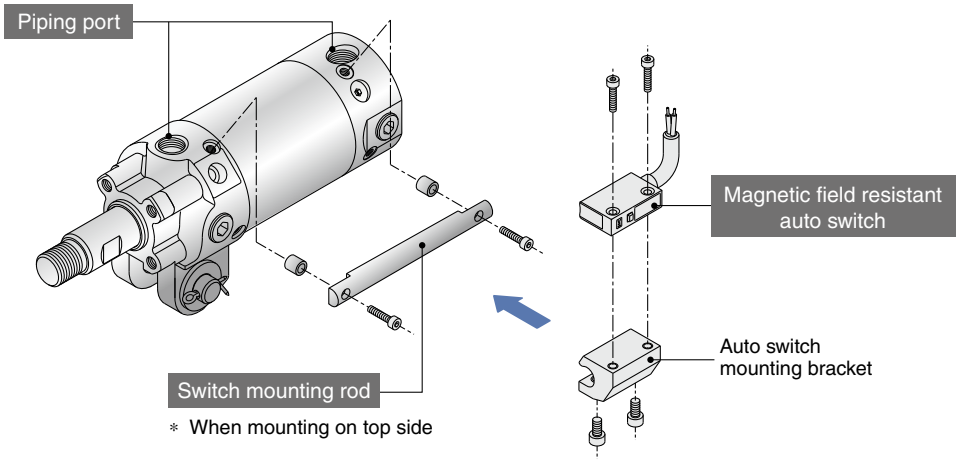

∗ When mounting on top side

Various types of auto switches can be mounted.

Magnetic field resistant auto switches

D-P3DWA, D-P4DW,
D-P79WSE, D-P74□

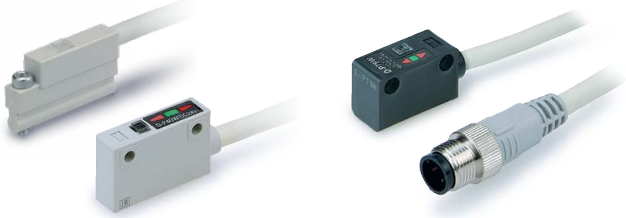

Standard auto switches

D-M9□W, D-A9□

D-A93

D-A90 (V)
D-A93V
D-A96 (V)

Series			Bore size [mm]			Stroke [mm]	Clevis width [mm]	Page
			40	50	63			
New **Clamp Cylinder** 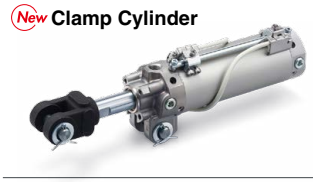	Standard magnet type	**CKG1□-Z1**	●	●	●	50, 75, 100, 125, 150, 200∗1 ∗1 Excludes ø40	12.5 16.5 19.5	3
	Without magnet	**CK1□-Z1**	●	●	●			
	Strong magnet type	**CKP1□-Z1**	●	●	●			5

CONTENTS

Clamp Cylinder *CK□1 Series*

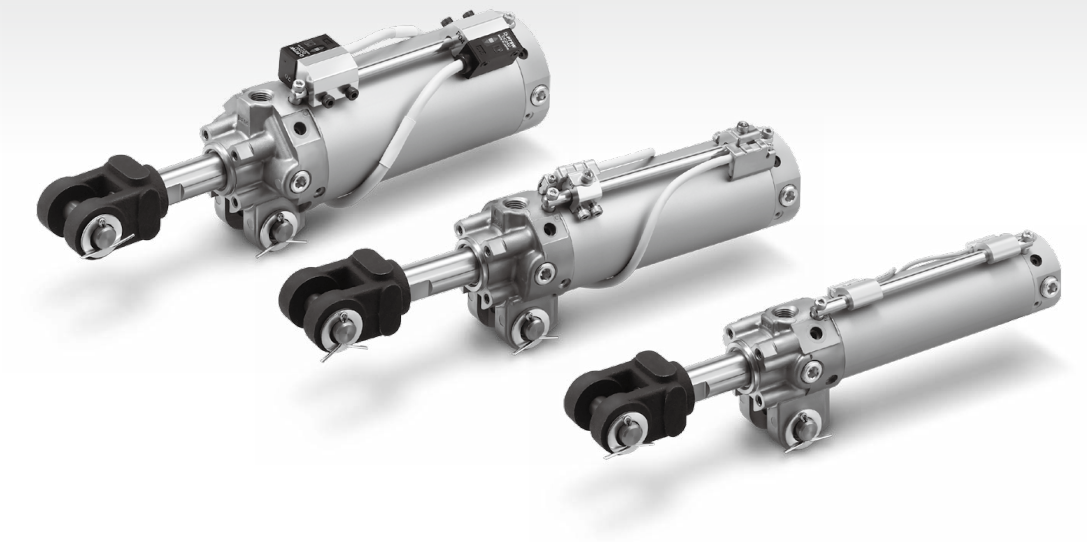

Clamp Cylinder
CK1/CKG1 Series
ø40, ø50, ø63

RoHS

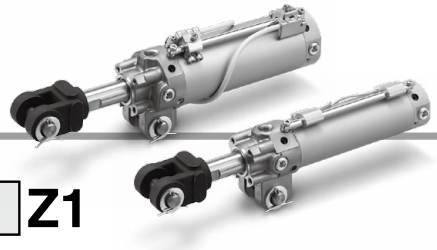

How to Order

Without auto switch CK1 A 50 □ – 100 Y □ Z1

With magnetic field resistant auto switch[*1] CKG1 A 50 □ – 100 Y □ Z1 – P3DWASC □ ❼

*1 Refer to page 15 when band-mounting the D-P4DW□ type auto switch.

With standard auto switch CKG1 A 50 □ – 100 Y □ Z1 – M9BW □ – □

Built-in standard magnet for auto switch

❶ ❷ ❸ ❹ ❺ ❻ ❽ ❾ ❿

❶ Clevis width

A	16.5 mm
B	19.5 mm
C	12.5 mm

❷ Bore size

40	40 mm
50	50 mm
63	63 mm

❸ Thread type

Nil	Rc1/4
TN	NPT1/4
TF	G1/4

❹ Cylinder stroke [mm]

40	50, 75, 100, 125, 150
50	50, 75, 100, 125, 150, 200
63	50, 75, 100, 125, 150, 200

* Contact SMC when an intermediate stroke is necessary.

❺ End bracket

Nil	None
I	Single knuckle joint (M6 without tap)
IA	Single knuckle joint (M6 with tap)
Y	Double knuckle joint (M6 without tap)
YA	Double knuckle joint (M6 with tap)

* A knuckle pin, cotter pins, and flat washers are provided as a standard for Y and YA.

❻ Option

Nil	None
B	Limit switch mounting base*1
D	Dog fitting*1
L	Foot bracket
K*2	Pedestal (for 75, 100, 150 mm strokes only)

*1 Only IA or YA (M6 with tap) is selectable as the end bracket for the B, D, and BD types.
*2 Only available for clevis width A (16.5 mm)

❼ Magnetic field resistant auto switch

* Select applicable auto switch models from Table 1.

Nil	Without auto switch (Built-in magnet) Without switch mounting rod
P	Without auto switch (Built-in magnet) With switch mounting rod

❽ Standard auto switch

* For applicable auto switches, refer to Table 2.
* Auto switches are shipped together with the product but do not come assembled.

Nil	Without auto switch (Built-in magnet)

❾ Number of auto switches

Nil	2
S	1
n	n

❿ Auto switch mounting type

Nil	Band mounting
P	Rod mounting

Built-in Standard Magnet Cylinder Part No.

1) Built-in standard magnet without auto switch, without switch mounting rod

Symbol for the auto switch type is "Nil" as shown below.
(Example) CKG1A50-50YZ1

2) Built-in standard magnet without auto switch, with switch mounting rod

Symbol for the auto switch type is "P" as shown below.
(Example) CKG1A50-50YZ1-P
* The auto switch mounting bracket is not included.

Table 1. Magnetic Field Resistant Auto Switches/Refer to the **Web Catalog** for detailed auto switch specifications.

Type	Rod mounting	Band mounting	Auto switch model	Applicable magnetic field	Electrical entry	Indicator light	Wiring (Pin no. in use)	Load voltage	Lead wire length	Applicable load
Solid state auto switch	●	—	**D-P3DWASC**	AC magnetic field (Single-phase AC welding magnetic field)	Pre-wired connector	2-color indicator	2-wire (3–4)	24 VDC	0.3 m	Relay, PLC
	●	—	**D-P3DWASE**				2-wire (1–4)			
	●	—	**D-P3DWA**		Grommet		2-wire		0.5 m	
	●	—	**D-P3DWAL**						3 m	
	●	—	**D-P3DWAZ**						5 m	
	●	●	**D-P4DWSC**		Pre-wired connector		2-wire (3–4)		0.3 m	
	●	●	**D-P4DWSE**				2-wire (1–4)			
	●	●	**D-P4DWL**		Grommet		2-wire		3 m	
	●	●	**D-P4DWZ**						5 m	

∗ Refer to page 12 when ordering the auto switch mounting bracket or switch mounting rod assembly.
∗ For the D-P3DWA□, the auto switch and auto switch mounting bracket are shipped together with the product but do not come assembled.

Table 2. Standard Auto Switches ⚠**Standard auto switches cannot be used under a strong magnetic field.**

Type	Special function	Electrical entry	Indicator light	Wiring (Output)	Load voltage DC		Load voltage AC	Auto switch model	Lead wire length [m] 0.5 (Nil)	1 (M)	3 (L)	5 (Z)	Pre-wired connector	Applicable load	
Solid state auto switch	—	Grommet	Yes	3-wire (NPN)	24 V	5 V, 12 V	—	**M9N**	●	●	●	○	○	IC circuit	Relay, PLC
				3-wire (PNP)				**M9P**	●	●	●	○	○		
				2-wire		12 V		**M9B**	●	●	●	○	○	—	
	Diagnostic indication (2-color indicator)			3-wire (NPN)		5 V, 12 V		**M9NW**	●	●	●	○	○	IC circuit	
				3-wire (PNP)				**M9PW**	●	●	●	○	○		
				2-wire		12 V		**M9BW**	●	●	●	○	○	—	
	Water resistant (2-color indicator)			3-wire (NPN)		5 V, 12 V		**M9NA**	○	○	●	○	○	IC circuit	
				3-wire (PNP)				**M9PA**	○	○	●	○	○		
				2-wire		12 V		**M9BA**	○	○	●	○	○	—	
Reed auto switch	—	Grommet	Yes	3-wire (NPN equivalent)	—	5 V	—	**A96**	●	—	●	—	—	IC circuit	—
				2-wire	24 V	12 V	100 V	**A93**	●	●	●	●	—	—	Relay, PLC
			No			5 V, 12 V	100 V or less	**A90**	●	—	●	—	—	IC circuit	

∗ Solid state auto switches marked with a "○" are produced upon receipt of order
∗ Auto switches and mounting brackets are shipped together with the product but do not come assembled.
∗ For the standard magnet type (CKG1), auto switches other than those described above cannot be used.

∗ Lead wire length symbols: 0.5 m·····Nil (Example) M9NWV
1 m·····M (Example) M9NWVM
3 m·····L (Example) M9NWVL
5 m·····Z (Example) M9NWVZ

Clamp Cylinder
Strong Magnet Type
CKP1 Series
ø40, ø50, ø63

RoHS

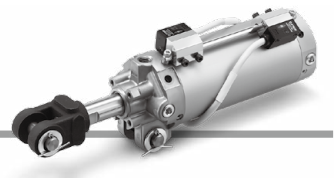

How to Order

With magnetic field resistant auto switch

CKP1 A 50 □ – 100 Y □ Z1 – P79WSE □

Built-in strong magnet for auto switch

❶ ❷ ❸ ❹ ❺ ❻ ❼ ❽

❶ Clevis width

A	16.5 mm
B	19.5 mm
C	12.5 mm

❷ Bore size

40	40 mm
50	50 mm
63	63 mm

❸ Thread type

Nil	Rc1/4
TN	NPT1/4
TF	G1/4

❹ Cylinder stroke [mm]

40	50, 75, 100, 125, 150
50	50, 75, 100, 125, 150, 200
63	50, 75, 100, 125, 150, 200

❺ End bracket

Nil	None
I	Single knuckle joint (M6 without tap)
IA	Single knuckle joint (M6 with tap)
Y	Double knuckle joint (M6 without tap)
YA	Double knuckle joint (M6 with tap)

∗ A knuckle pin, cotter pins, and flat washers are provided as a standard for Y and YA.

❻ Option

Nil	None
B	Limit switch mounting base∗1
D	Dog fitting∗1
L	Foot bracket
K∗2	Pedestal (for 75, 100, 150 mm strokes only)

∗1 Only IA or YA (M6 with tap) is selectable as the end bracket for the B, D, and BD types.
∗2 Only available for clevis width A (16.5 mm)

❼ Auto switch

∗ Select applicable auto switch models from the table below.

Nil	Without auto switch (Built-in magnet) Without switch mounting rod
P	Without auto switch (Built-in magnet) With switch mounting rod

❽ Number of auto switches

Nil	2
S	1
n	n

Built-in Strong Magnet Cylinder Part No.

1) Built-in strong magnet without auto switch, without switch mounting rod

Symbol for the auto switch type is “Nil” as shown below.
(Example) CKP1A50-50YZ1

2) Built-in strong magnet without auto switch, with switch mounting rod

Symbol for the auto switch type is “P” as shown below.
(Example) CKP1A50-50YZ1-P
∗ The auto switch mounting bracket is not included.

Magnetic Field Resistant Auto Switches/Refer to the **Web Catalog** for detailed auto switch specifications.

Type	Auto switch model	Applicable magnetic field	Electrical entry	Indicator light	Wiring (Pin no. in use)	Load voltage	Lead wire length	Applicable load
Reed auto switch	D-P79WSE	DC/AC magnetic field	Pre-wired connector	2-color indicator	2-wire (1–4)	24 VDC	0.3 m	Relay, PLC
	D-P74L		Grommet	1-color indicator	2-wire	24 VDC 100 VAC	3 m	
	D-P74Z						5 m	

∗ Refer to page 12 when ordering the auto switch mounting bracket or switch mounting rod assembly.
∗ For the D-P79WSE and D-P74□, the auto switch and auto switch mounting bracket are shipped together with the product but do not come assembled.
∗ For the strong magnet type (CKP1), auto switches other than those described above cannot be used.

Symbol

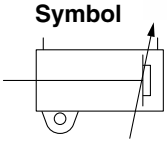

Refer to pages 11 to 15 for cylinders with auto switches.

- Auto Switch Proper Mounting Position (Detection at stroke end) and Mounting Height
- Minimum Stroke for Auto Switch Mounting
- Operating Range
- Auto Switch Mounting Brackets/Part Nos.

Specifications

Bore size [mm]	40	50	63
Fluid	Air		
Proof pressure	1.5 MPa		
Max. operating pressure	1.0 MPa		
Min. operating pressure	0.05 MPa		
Ambient and fluid temperatures	Without auto switch: −10 to 70°C With auto switch: −10 to 60°C		
Piston speed	50 to 500 mm/s		
Cushion	Unclamped side (head end): With air cushion		
Speed controller	Equipped on both ends		
Lubrication	Non-lube		
Stroke length tolerance	$^{+1.4}_{0}$		
Mounting∗1	Double clevis		

∗1 A clevis pin, cotter pins, and flat washers are equipped as a standard.

End Brackets/Options

Symbol	Description		Part no.		
			CKG1A/CKP1A	CKG1B/CKP1B	CKG1C/CKP1C
I	Single knuckle joint	M6 without tap	CKB-I04		
IA		M6 with tap	CKB-IA04		
Y	Double knuckle joint (A knuckle pin, cotter pins, and flat washers are equipped as a standard.)	M6 without tap	CKA-Y04	CKB-Y04	CKC-Y04
YA		M6 with tap	CKA-YA04	CKB-YA04	CKC-YA04

∗ For details on dimensions, refer to pages 9 and 10.

Cylinder Weight

[kg]

Bore size [mm]		ø40	ø50	ø63
CK(G)1□ cylinder	Basic weight	0.74	0.86	1.04
	Additional weight per 25 mm of stroke	0.10	0.11	0.13
CKG1□ cylinder∗1	Basic weight	0.75	0.87	1.05
	Additional weight per 25 mm of stroke∗1	0.11	0.12	0.14
CKP1□ cylinder∗1	Basic weight	0.83	0.97	1.19
	Additional weight per 25 mm of stroke∗1	0.11	0.12	0.14

∗1 Weight including the auto switch mounting rod

Option/Bracket Weight

[kg]

Description		ø40/ø50/ø63
Double knuckle joint		0.34
Single knuckle joint		0.20
Knuckle pin		0.06
Foot bracket		0.23
Limit switch mounting base		0.23
Dog fitting		0.12
Pedestal	75 mm stroke	2.01
	100 mm stroke	1.97
	150 mm stroke	1.99

∗ Required accessories for mounting are included in each optional bracket.

Theoretical Output

[N]

Bore size [mm]	Rod size [mm]	Operating direction	Piston area [mm²]	Operating pressure [MPa]			
				0.3	0.4	0.5	0.6
40	20	OUT	1260	378	504	630	756
		IN	943	283	377	472	566
50	20	OUT	1960	588	784	980	1180
		IN	1650	495	660	825	990
63	20	OUT	3120	934	1250	1560	1870
		IN	2800	840	1120	1400	1680

Construction

CKG1□40, 50, 63-□Z1

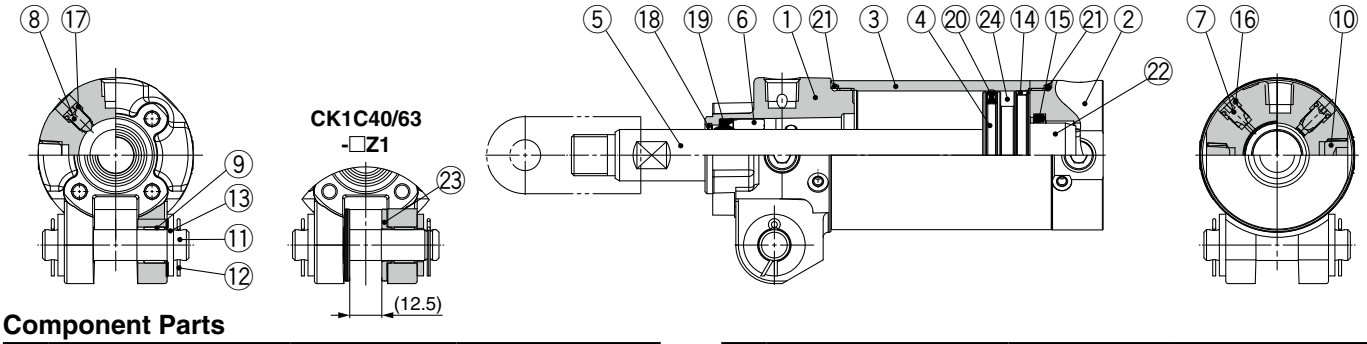

Component Parts

No.	Description	Material	Note
1	**Rod cover**	Aluminum die-casted	Chromating
2	**Head cover**	Aluminum alloy	Anodized
3	**Cylinder tube**	Aluminum alloy	Hard anodized
4	**Piston**	Aluminum alloy	
5	**Piston rod**	Carbon steel	Hard chrome plating
6	**Bushing**	Bearing alloy	
7	**Cushion valve**	Steel wire	Black zinc chromating
8	**Speed controller valve**	Steel wire	ø40: Electroless nickel plating ø50, ø63: Zinc chromating
9	**Bushing**	Oil-impregnated sintered alloy	
10	**Hexagon socket head plug**	Carbon steel	
11	**Pin**	Carbon steel	
12	**Cotter pin**	Steel wire	

No.	Description	Material	Note
13	**Flat washer**	Steel wire	
14	**Wear ring**	Resin	
15	**Cushion seal**	Urethane	
16	**Cushion valve seal**	NBR	
17	**Speed controller valve seal**	NBR	
18	**Coil scraper**	Phosphor bronze	
19	**Rod seal**	NBR	
20	**Piston seal**	NBR	
21	**Cylinder tube gasket**	NBR	
22	**Cushion ring**	Aluminum alloy	Anodized
23	**Spacer**	Bearing alloy	
24	**Magnet**	—	

CKP1□40, 50, 63-□Z1

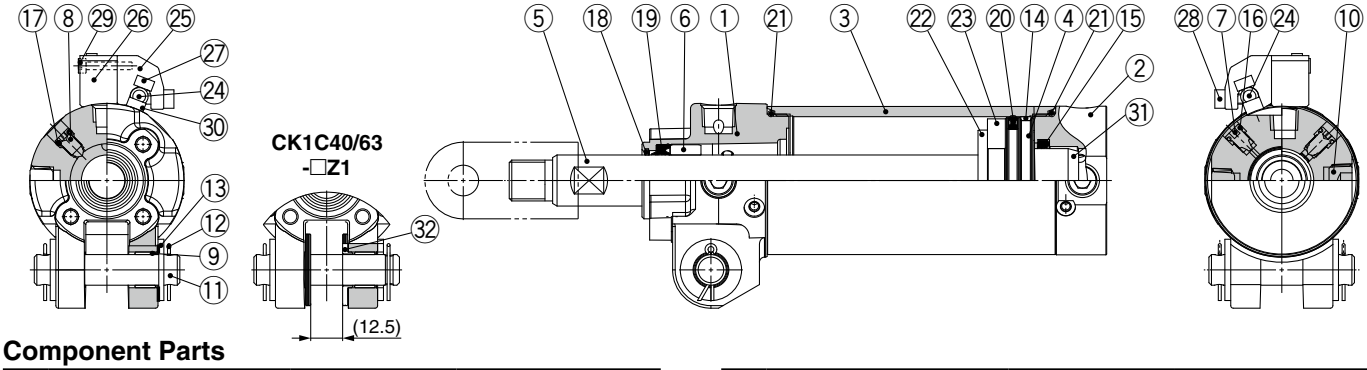

Component Parts

No.	Description	Material	Note
1	**Rod cover**	Aluminum die-casted	Chromating
2	**Head cover**	Aluminum alloy	Anodized
3	**Cylinder tube**	Aluminum alloy	Hard anodized
4	**Piston**	Aluminum alloy	
5	**Piston rod**	Carbon steel	Hard chrome plating
6	**Bushing**	Bearing alloy	
7	**Cushion valve**	Steel wire	Black zinc chromating
8	**Speed controller valve**	Steel wire	ø40: Electroless nickel plating ø50, ø63: Zinc chromating
9	**Bushing**	Oil-impregnated sintered alloy	
10	**Hexagon socket head plug**	Carbon steel	
11	**Pin**	Carbon steel	
12	**Cotter pin**	Steel wire	
13	**Flat washer**	Steel wire	
14	**Wear ring**	Resin	
15	**Cushion seal**	Urethane	
16	**Cushion valve seal**	NBR	
17	**Speed controller valve seal**	NBR	

No.	Description	Material	Note
18	**Coil scraper**	Phosphor bronze	
19	**Rod seal**	NBR	
20	**Piston seal**	NBR	
21	**Cylinder tube gasket**	NBR	
22	**Magnet holder**	Aluminum alloy	
23	**Magnet**	—	
24	**Switch mounting rod**	Steel	
25	**Switch mounting bracket**	Aluminum alloy	
26	**Magnetic field resistant auto switch**	—	
27	**Hexagon socket head cap screw**	Steel	M4 x 0.7 x 14 L
28	**Hexagon socket head cap screw**	Steel	M4 x 0.7 x 8 L 2 pcs. per switch
29	**Hexagon socket head cap screw**	Steel	M3 x 0.5 x 16 L 2 pcs. per switch
30	**Switch mounting spacer**	Aluminum alloy	
31	**Cushion ring**	Aluminum alloy	Anodized
32	**Spacer**	Bearing alloy	

Replacement Parts/Seal Kit (CK□1 common)

Bore size [mm]	Order no.	Contents
40	CK1A40-PS	Set of nos. ⑲, ⑳, ㉑

∗ The seal kit does not include a grease pack. Order it separately.
Grease pack part no.: GR-S-010 (compatible with all sizes)

∗ Cylinders with ø50 or larger bore sizes are tightened with a large tightening torque and cannot be disassembled. If disassembly is required, please contact SMC.

Dimensions

CK□1□40, 50, 63-□Z1

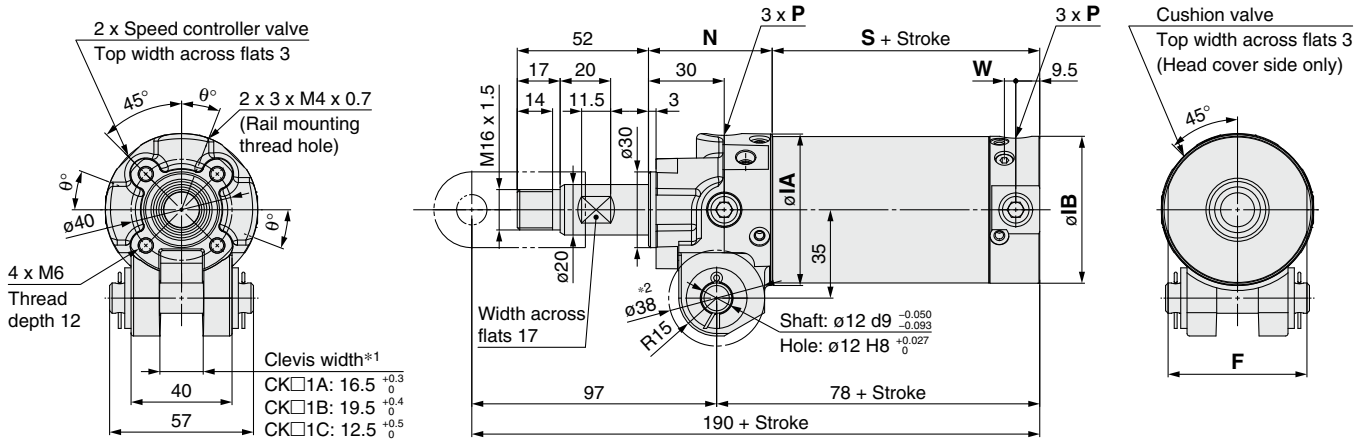

Unit: mm

Bore size \ Symbol	F	øIA	øIB	N	S	W	θ°	P		
								Nil	TN	TF
40	44	52	47	52	53	5	23	Rc1/4	NPT1/4	G1/4
50	55	60	58	49	56	4.5	21			
63	69	74	72	49	56	4.5	19			

*1 Indicates the point where the clevis is narrowest (on the tube side)
*2 Indicates the range applicable to the clevis width

CKP1□40, 50, 63-□Z1

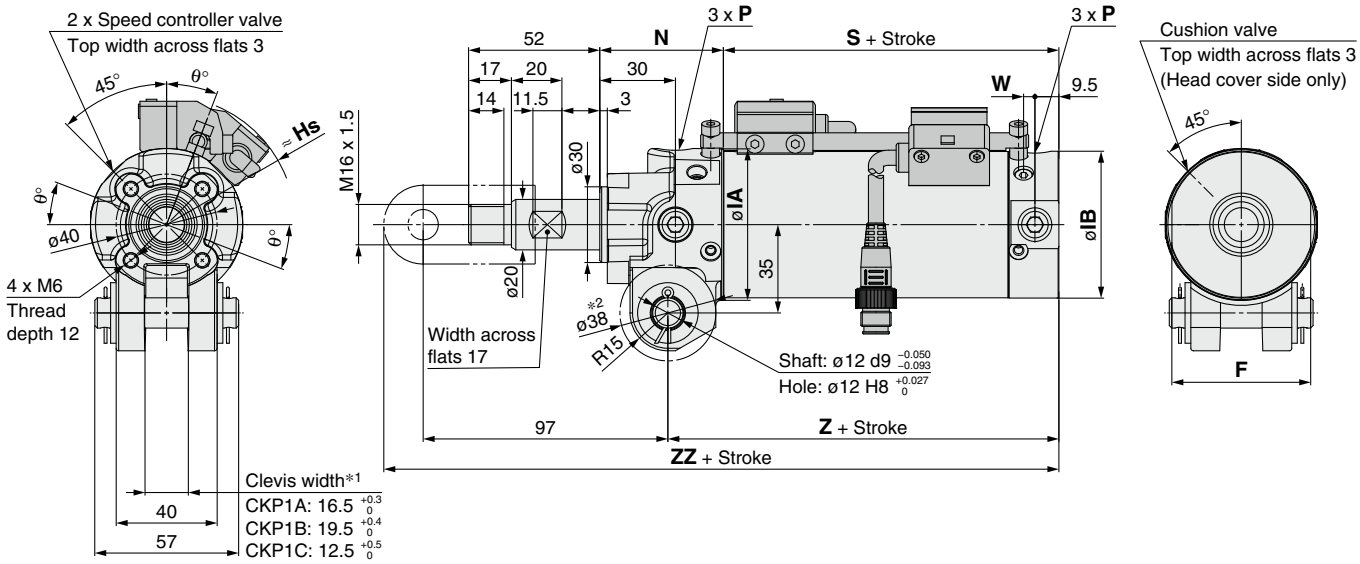

Unit: mm

Bore size \ Symbol	F	øIA	øIB	N	S	W	Z	ZZ	Hs	θ°	P		
											Nil	TN	TF
40	44	52	47	52	58	5	83	195	47.5	23	Rc1/4	NPT1/4	G1/4
50	55	60	58	49	58	4.5	80	192	51	21			
63	69	74	72	49	58	4.5	80	192	57.5	19			

*1 Indicates the point where the clevis is narrowest (on the tube side)
*2 Indicates the range applicable to the clevis width

End Brackets

End Brackets

Single Knuckle Joint

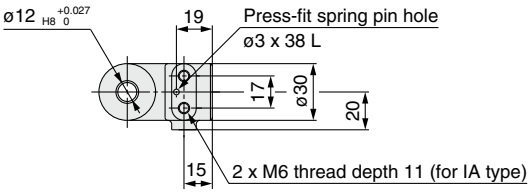

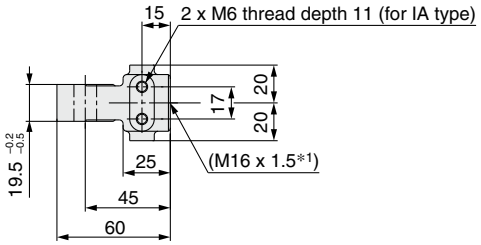

Material: Cast iron

Part no.	End bracket symbol	Applicable clamp cylinder
CKB-I04	I (M6 without tap)	CK□1A series CK□1B series
CKB-IA04	IA (M6 with tap)	

∗1 Refer to the dimensions on page 8 for the M16 x 1.5 piston rod end mounting dimension.
∗ A spring pin is attached to the single knuckle joint as a standard.

Double Knuckle Joint

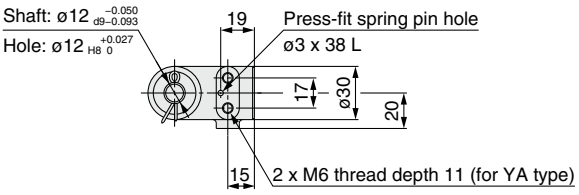

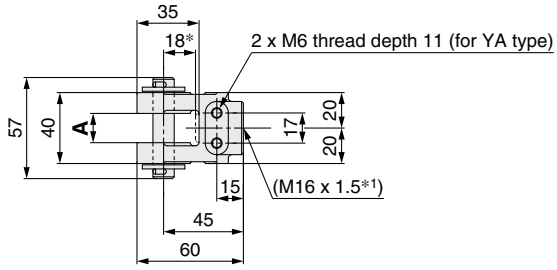

Material: Cast iron Unit: mm

Part no.	End bracket symbol	A	Applicable clamp cylinder
CKA-Y04	Y (M6 without tap)	16.5 +0.3 0	CK□1A series
CKA-YA04	YA (M6 with tap)		
CKB-Y04	Y (M6 without tap)	19.5 +0.4 0	CK□1B series
CKB-YA04	YA (M6 with tap)		
CKC-Y04	Y (M6 without tap)	12.5 +0.3 0	CK□1C series
CKC-YA04	YA (M6 with tap)		

∗1 Refer to the dimensions on page 8 for the M16 x 1.5 piston rod end mounting dimension.
∗ A knuckle pin, cotter pins, flat washers, and a spring pin are attached to the double knuckle joint as a standard.
∗ The dimension with ∗ shows the value when mounted on the piston rod.

Pin

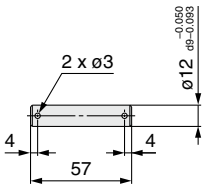

Material: Carbon steel

Part no.	Usage
CK-P04	Knuckle pin Clevis pin

∗ Cotter pins and flat washers are attached to the pin as a standard.

Options

Limit Switch Mounting Base/Dog Fitting

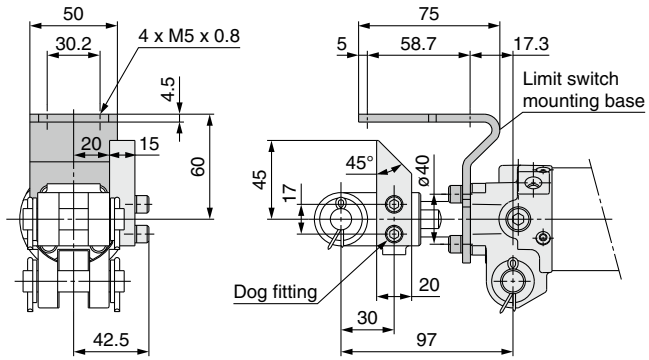

Material: Rolled steel

Part no.	Option symbol	Description	Applicable clamp cylinder
CK-B04	**B**	Limit switch mounting base	CK□1 series
CK-D04	**D**	Dog fitting	

∗ Limit switch mounting base and dog fitting can be repositioned by removing the hexagon socket head cap screw.
∗ When ordering the limit switch mounting base and the dog fitting individually, mounting bolts (hexagon socket head cap screw) and spring washers will be attached as a standard.

⚠

When you attach a dog fitting, be sure to use a knuckle joint, M6 with tap (end bracket symbol IA or YA).
The dog fitting cannot be attached to the knuckle joint, M6 without tap (end bracket symbol I or Y).

Foot Bracket

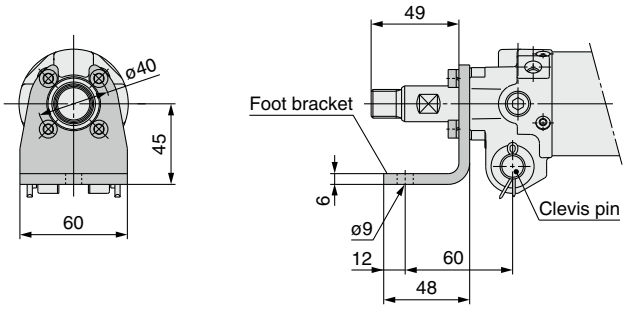

Material: Rolled steel

Part no.	Option symbol	Applicable clamp cylinder
CK-L04	**L**	CK□1 series

∗ A mounting bolt (hexagon socket head cap screw) and a spring washer will be attached as a standard for the foot bracket.
∗ When mounting the cylinder, use both the foot bracket and clevis pin. Please avoid using the foot bracket by itself as this may result in damage.

Pedestal

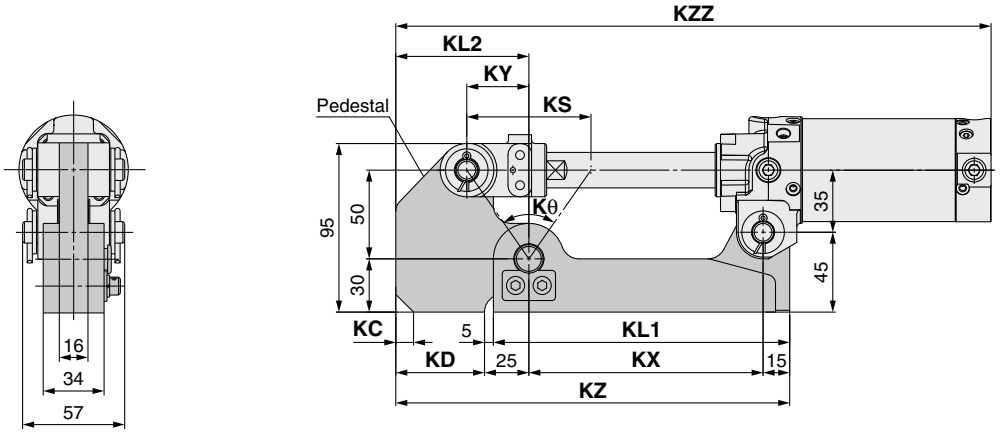

Material: Rolled steel

Unit: mm

Part no.	Option symbol	KL1	KL2	KS	KX	KY	KZ	Kθ	KC	KD	KZZ				Applicable clamp cylinder
											CKG□40	CKP□40	CKG□50 CKG□63	CKP□50 CKP□63	
CKA-K075	**K**	167	75	70	132	35	222	69°59′	0	50	360	365	360	362	CK□1A□-75YZ1
CKA-K100		177	75	90	142	45	232	83°58′	0	50	395	400	395	397	CK□1A□-100YZ1
CKA-K150		202	85	140	167	70	267	108°55′	10	60	480	485	480	482	CK□1A□-150YZ1

∗ Only available for the CK□1A series (Clevis width: 16.5 mm)

Auto Switch Mounting (Rod Mounting Type)

Auto Switch Proper Mounting Position (Detection at stroke end) and Mounting Height

D-P3DWA□

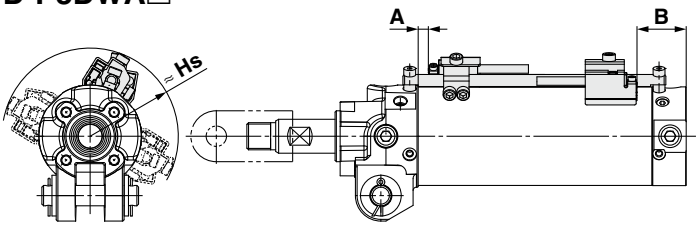

D-P4DW□

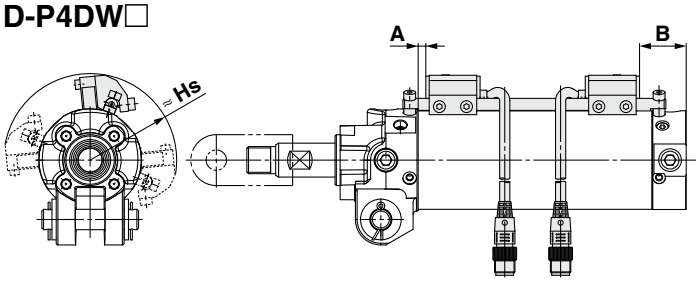

∗ The above drawing is the switch rod mounting example for the D-P4DWS□.

D-P79WSE
D-P74□

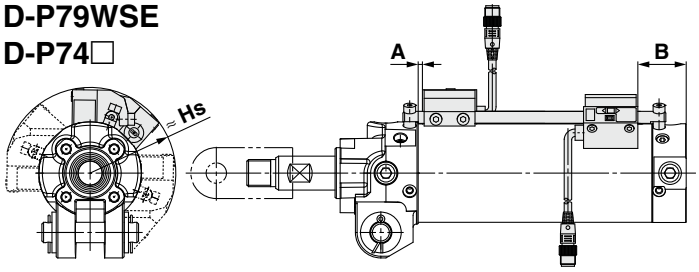

∗ The above drawing is the switch rod mounting example for the D-P79WSE.

D-M9□/M9□W
D-M9□A/A9□

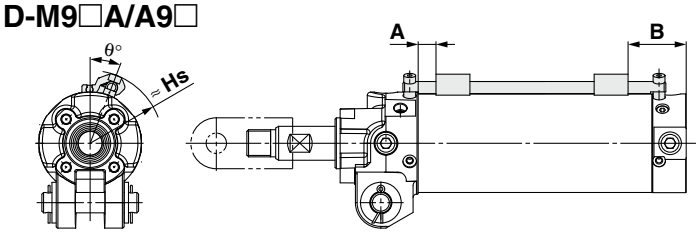

CKG1 (Standard magnet type)

Unit: mm

Auto switch model	Symbol	Auto switch set value and mounting height		
		ø40	ø50	ø63
D-P3DWA□	A	6.5	8	8
	B	25.5	27	27
	Hs	46.5	52	59
D-P4DW□	A	4	5.5	5.5
	B	23	24.5	24.5
	Hs	45.5	51	58.5
D-M9□ D-M9□W D-M9□A	A	11	12.5	12.5
	B	30	31.5	31.5
	Hs	39	44.5	51.5
D-A9□	A	7	8.5	8.5
	B	26	27.5	27.5
	Hs	39	44.5	51.5

CKP1 (Strong magnet type)

Unit: mm

Auto switch model	Symbol	Auto switch set value and mounting height		
		ø40	ø50	ø63
D-P79WSE D-P74□	A	0	0	0
	B	26	27	27
	Hs	47.5	51	57.5

∗ The mounting position should be referred for reference only for the auto switch mounting position at the stroke end detection. Adjust the auto switch after confirming the operation to set actually.
∗ In the case of a 2-color indicator auto switch, mount it at the center of the green LED illuminating range.
However, pay attention that for D-P79WSE the green indicator light will not be illuminated when used close to the edge of the rod end.
∗ Adjust the auto switch after confirming the operating conditions in the actual setting.

Minimum Stroke for Auto Switch Mounting

Unit: mm

Auto switch model	With 1 pc.	With 2 pcs.	
		Different surfaces	Same surface
D-P3DWA□	50	50	
D-P4DW□			
D-P79WSE			
D-P74□			

∗ When two D-P3DWA□ are mounted to the cylinder with stroke 50 mm, mount them on different surfaces.
∗ The standard strokes of CKG1 are 50, 75, 100, 125, and 150 mm. The values in the table above are not based on the minimum detection interval when setting the D-P3DWA auto switch, but on the standard minimum stroke of the cylinder.

Operating Range

Unit: mm

Auto switch model	Bore size		
	40	50	63
D-P3DWA□	5.5	5.5	5.5
D-P4DW□	4	4	4.5
D-P79WSE	8	9	9.5
D-P74□			
D-M9□ D-M9□W D-M9□A	4	4.5	5
D-A9□	8	8	9

∗ Values which include hysteresis are for reference purposes only. They are not a guarantee (assuming approximately ±30% dispersion) and may change substantially depending on the ambient environment.

Auto Switch Mounting Brackets/Part Nos.

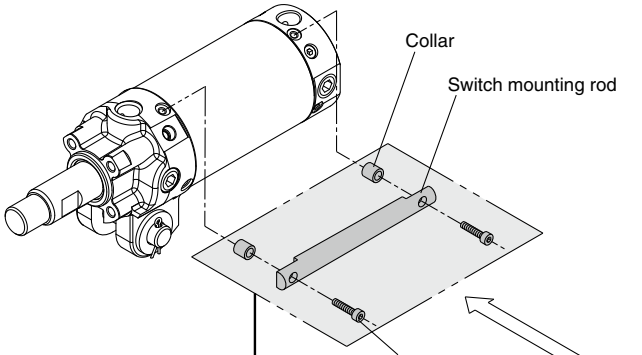

D-P4DW□
D-P79W□*1
D-P74

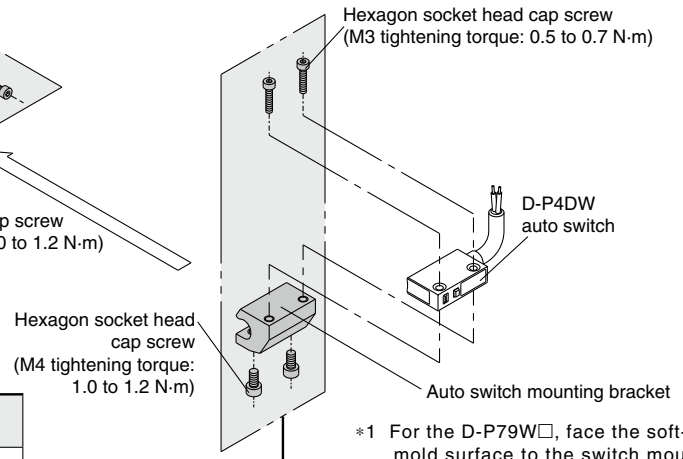

*1 For the D-P79W□, face the soft-resin mold surface to the switch mounting bracket side for mounting.

Auto Switch Mounting Rod Assembly/Part Nos.

CKG1 Series

Bore size [mm]	Cylinder stroke [mm]	Part no.
40	50	CKG40-RZ050A
	75	CKG40-RZ075A
	100	CKG40-RZ100A
	125	CKG40-RZ125A
	150	CKG40-RZ150A
50, 63	50	CKG50-RZ050A
	75	CKG50-RZ075A
	100	CKG50-RZ100A
	125	CKG50-RZ125A
	150	CKG50-RZ150A
	200	CKG50-RZ200A

CKP1 Series

Bore size [mm]	Cylinder stroke [mm]	Part no.
40	50	CKP50-RZ050A
	75	CKP50-RZ075A
	100	CKP50-RZ100A
	125	CKP50-RZ125A
	150	CKP50-RZ150A
50, 63	50	CKP50-RZ050A
	75	CKP50-RZ075A
	100	CKP50-RZ100A
	125	CKP50-RZ125A
	150	CKP50-RZ150A
	200	CKP50-RZ200A

D-P3DWA□

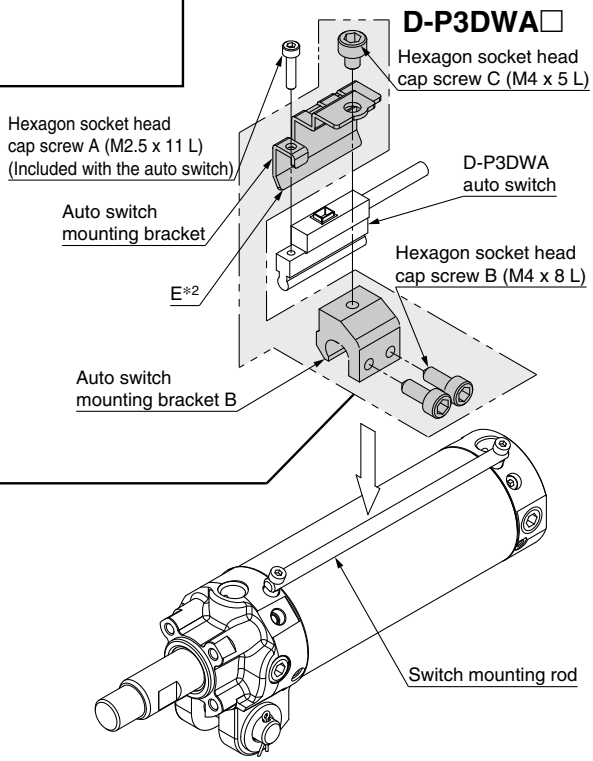

D-M9□/M9□W
D-M9□A/A9□

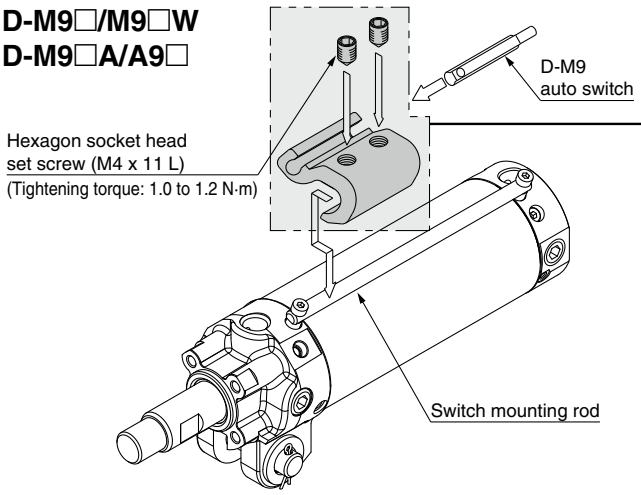

*2 Mount the part E of the auto switch mounting bracket so that it is in contact with the cylinder tube.

* The tightening torque for the hexagon socket head cap screw A (M2.5) is 0.2 to 0.3 N·m. Hold the shorter side of a hexagon wrench, and turn it to tighten. (Too much tightening may break the switch.)

* Tighten the hexagon socket head cap screws B and C (M4) with a tightening torque of 1 to 1.2 N·m.

Auto Switch Mounting Brackets/Part Nos.

Applicable cylinder	Applicable auto switch	Part no.		
		ø40	ø50	ø63
CKG1	D-P3DWA□	BK7-040S		
	D-P4DW□	BK1T-040		
	D-M9□ D-A9□	BA7-040		
CKP1	D-P79WSE D-P74L/Z	BAP1T-040		

Auto Switch Mounting (Band Mounting Type)

Auto Switch Proper Mounting Position (Detection at stroke end) and Mounting Height

D-P4DW□

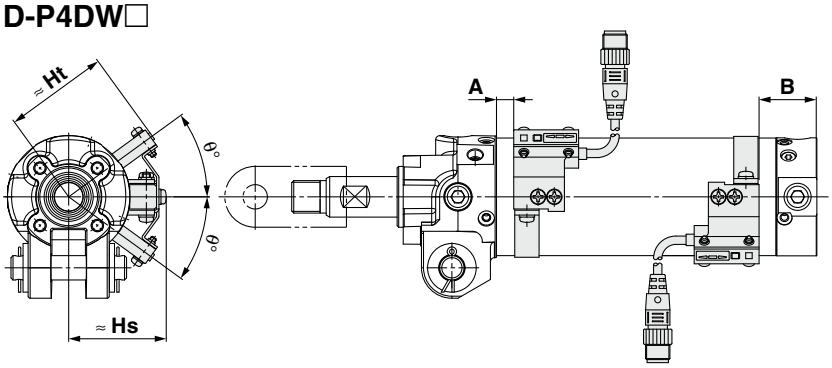

∗ The above drawing is the switch band mounting example for the D-P4DWS□.

D-M9□/M9□W
D-M9□A/A9□

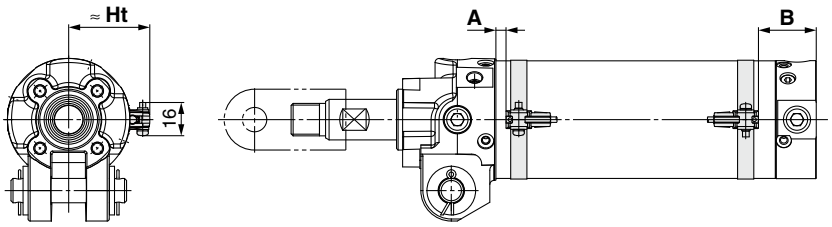

CKG1 (Standard magnet type) Unit: mm

Auto switch model	Symbol	Auto switch set value and mounting height		
		ø40	ø50	ø63
D-P4DW□	A	4	5.5	5.5
	B	23	24.5	24.5
	Hs	43	48	55
	Ht	46	51.5	58.5
	θ	40	36	33
D-M9□ D-M9□W D-M9□A	A	11	12.5	12.5
	B	30	31.5	31.5
	Hs	35	40.5	47.5
D-A9□	A	7	8.5	8.5
	B	26	27.5	27.5
	Hs	35	40.5	47.5

∗ The mounting position should be referred for reference only for the auto switch mounting position at the stroke end detection. Adjust the auto switch after confirming the operation to set actually.
∗ The auto switch mounting position is temporarily set at the time of shipping from our factory. Change it to the desired position in accordance to your facility.
∗ For the D-M9□/M9□W/M9□A/A9□, A and B are the dimensions from the end of the head cover/rod cover to the end of the auto switch.
∗ As for the D-P4DW□ type, band mounting type, the auto switch mounting bracket and the auto switch have to be ordered separately. For details, refer to page 15.
∗ In the case of a 2-color indicator auto switch, mount it at the center of the green LED illuminating range.

Minimum Stroke for Auto Switch Mounting Unit: mm

Auto switch model	With 1 pc.	With 2 pcs.	
		Different surfaces	Same surface
D-P4DW□	50	50	50
D-M9□ D-M9□W D-M9□A			
D-A9□			

⚠ Caution

As for the precautions on the auto switches, product specifications, refer to pages 17 and 18.

Operating Range

Unit: mm

Auto switch model	Bore size		
	40	50	63
D-P4DW□	5	5	5.5
D-M9□ D-M9□W D-M9□A	5.5	6.5	7
D-A9□	8	8	9

∗ Values which include hysteresis are for reference purposes only. They are not a guarantee (assuming approximately ±30% dispersion) and may change substantially depending on the ambient environment.

Auto Switch Mounting Brackets/Part Nos.

Auto switch model	Bore size [mm]		
	40	50	63
D-P4DW□	BA8-040	BA8-050	BA8-063

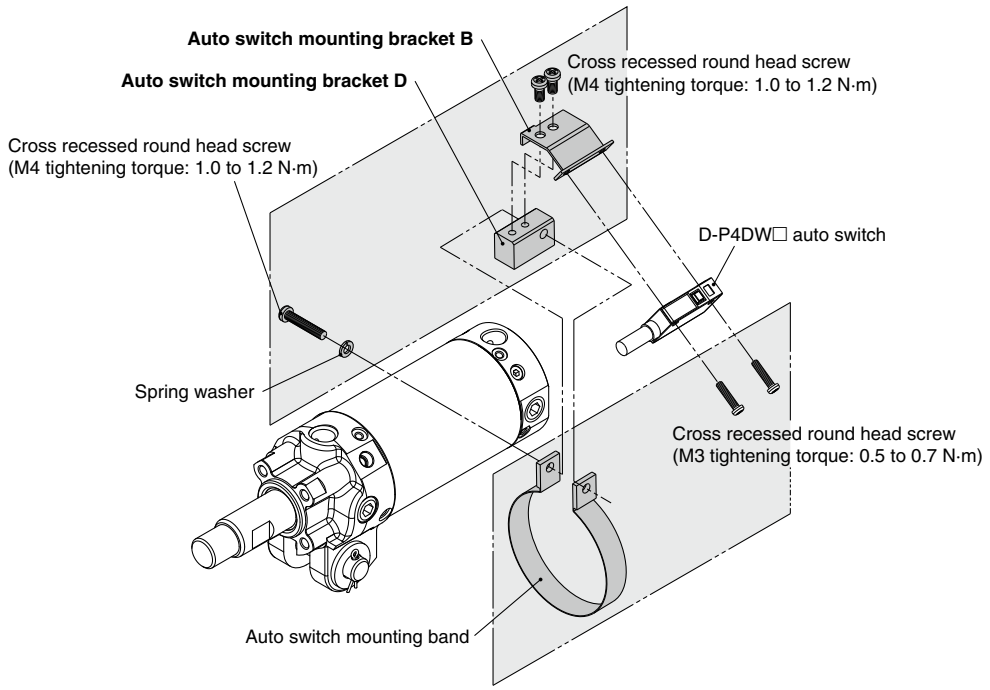

Auto switch model	Bore size [mm]		
	40	50	63
D-M9□ **D-M9□W** **D-A9□**	BMA3-040*1 (A set of a, b, c, d)	BMA3-050*1 (A set of a, b, c, d)	BMA3-063*1 (A set of a, b, c, d)
D-M9□A*2	BMA3-040S (A set of b, c, e, f)	BMA3-050S (A set of b, c, e, f)	BMA3-063S (A set of b, c, e, f)

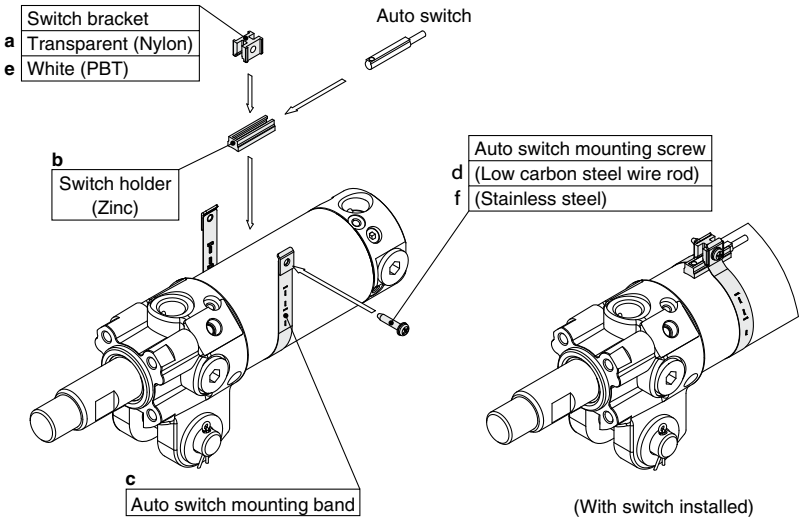

* Band (c) is mounted so that the projected part is on the internal side (contact side with the tube).

*1 Since the switch bracket (made of nylon) is affected in an environment where alcohol, chloroform, methylamines, hydrochloric acid, or sulfuric acid is splashed over, so it cannot be used. Please contact SMC regarding other chemicals.

*2 When mounting a D-M9□A(V) type auto switch, if the switch bracket is mounted on the indicator light, it may damage the auto switch. Therefore, be sure to avoid mounting the switch bracket on the indicator light.

CKG1 Series
Auto Switch Mounting

Magnetic Field Resistant Auto Switch D-P4DW□/Band Mounting Compliant

Band mounting of the magnetic field resistant auto switch (D-P4DW□) to the CKG1□ series is possible by ordering the switch mounting bracket and the auto switch individually.

How to Order

Please order the switch mounting bracket, auto switch, and clamp cylinder individually. Refer to the table below for auto switch mounting bracket part numbers.

Part no.	Applicable auto switch model	Applicable clamp cylinder
BA8-040	D-P4DWSC	**CKG1□40**
BA8-050	D-P4DWSE	**CKG1□50**
BA8-063	D-P4DWL/Z	**CKG1□63**

Ordering Example

Example case ① Cylinder: CKG1A50-50YZ1 ····· 1
Example case ② Magnetic field resistant auto switch: D-P4DWSC ····· 2
Example case ③ Switch mounting bracket: BA8-050 ····· 2

∗ Please order the same quantity for the switch mounting bracket and the magnetic field resistant auto switch respectively.
∗ Band mounting for the magnetic field resistant auto switches D-P79WS□, D-P74□ is not applicable.

Applicable Magnetic Field Resistant Auto Switches/Refer to the **Web Catalog** for detailed auto switch specifications.

Applicable cylinder	Type	Auto switch model	Applicable magnetic field	Electrical entry	Indicator light	Wiring (Pin no. in use)	Load voltage	Lead wire length	Applicable load
CKG1	**Solid state auto switch**	**P4DWSC**	AC magnetic field (Single-phase AC welding magnetic field)	Pre-wired connector	2-color indicator	2-wire (3–4)	24 VDC	0.3 m	Relay, PLC
		P4DWSE				2-wire (1–4)			
		P4DWL		Grommet		2-wire		3 m	
		P4DWZ						5 m	

Prior to Use
Auto Switch Connections and Examples

Sink Input Specifications

3-wire, NPN

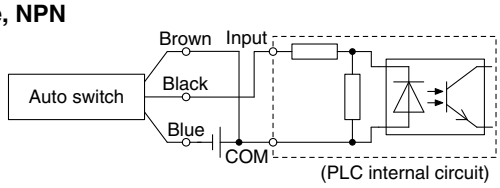

2-wire

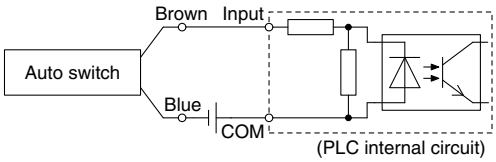

Source Input Specifications

3-wire, PNP

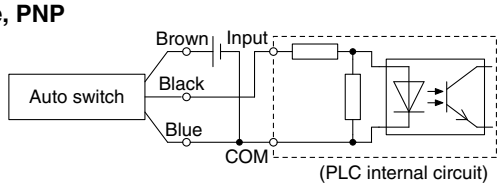

2-wire

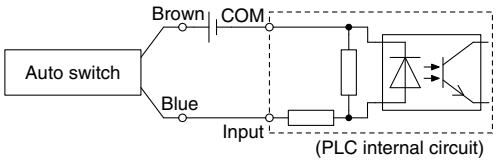

Connect according to the applicable PLC input specifications, as the connection method will vary depending on the PLC input specifications.

Examples of AND (Series) and OR (Parallel) Connections

∗ When using solid state auto switches, ensure the application is set up so the signals for the first 50 ms are invalid. Depending on the operating environment, the product may not operate properly.

3-wire AND connection for NPN output

(Using relays)

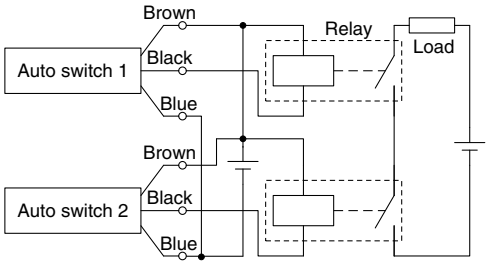

(Performed with auto switches only)

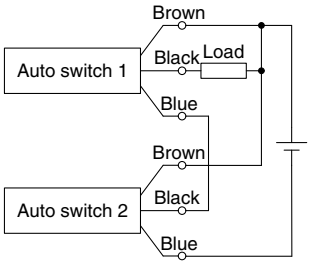

3-wire OR connection for NPN output

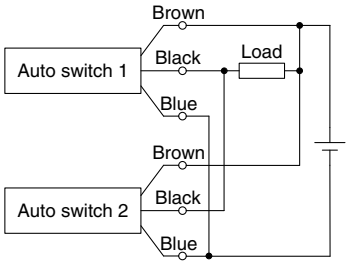

3-wire AND connection for PNP output

(Using relays)

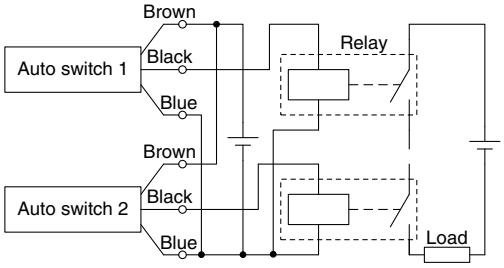

(Performed with auto switches only)

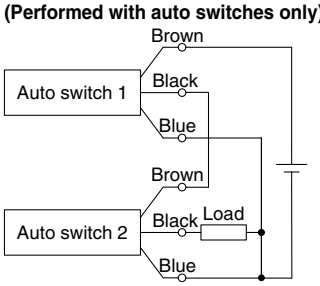

3-wire OR connection for PNP output

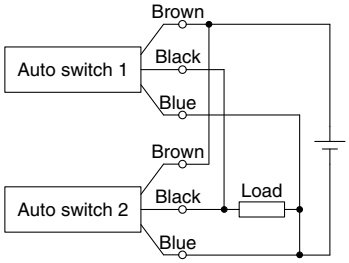

2-wire AND connection

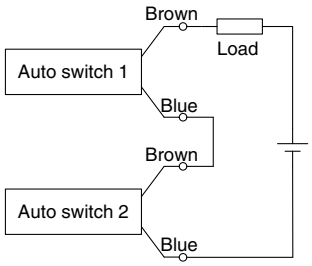

When two auto switches are connected in series, a load may malfunction because the load voltage will decline when in the ON state.
The indicator lights will light up when both of the auto switches are in the ON state.
Auto switches with a load voltage less than 20 V cannot be used. Please contact SMC if using AND connection for a heat-resistant solid state auto switch or a trimmer switch.

Example) Load voltage at ON
Power supply voltage: 24 VDC
Internal voltage drop: 4 V
Load voltage at ON = Power supply voltage – Internal voltage drop x 2 pcs.
= 24 V – 4 V x 2 pcs.
= 16 V

2-wire OR connection

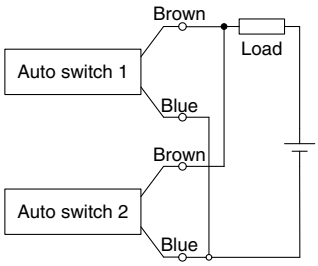

(Solid state)
When two auto switches are connected in parallel, malfunction may occur because the load voltage will increase when in the OFF state.

(Reed)
Because there is no current leakage, the load voltage will not increase when turned OFF.
However, depending on the number of auto switches in the ON state, the indicator lights may sometimes grow dim or not light up, due to the dispersion and reduction of the current flowing to the auto switches.

Example) Load voltage at OFF
Leakage current: 1 mA
Load impedance: 3 kΩ
Load voltage at OFF = Leakage current x 2 pcs. x Load impedance
= 1 mA x 2 pcs. x 3 kΩ
= 6 V

CK□1 Series
Specific Product Precautions 1

Be sure to read this before handling the products. Refer to the back cover for safety instructions. For actuator and auto switch precautions, refer to the "Handling Precautions for SMC Products" and the "Operation Manual" on the SMC website.

Cushion/Speed Controller Adjustment

⚠ Danger

1. **The speed controller valve and cushion valve are crimped. Do not rotate from a fully closed state, by more than 2 rotations for more for the cushion valve and 4.5 rotations (ø40: 2 rotations) for the speed controller valve.**
   Exceeding these limits is dangerous because it may cause the valves to be detached and ejected.

Piping Port/Switch Mounting Rod Location Change

⚠ Caution

1. **Do not leave out the component parts when the piping port location is changed.**
   Even if one of the component parts is kept away, malfunction may occur, resulting in dangerous operation.
2. **To prevent air leakage, re-wind the pipe tape and fit into the changed location when the piping port location is changed.**

Handling

Magnetic field resistant auto switches D-P79WSE/D-P74□ are specifically for use with strong magnet type cylinders and are not compatible with general auto switches or cylinders. Strong magnet type cylinders are labeled as follows.

Magnetic field resistant cylinder with built-in magnet (For use with auto switch D-P7)

Handling

Mounting

1. **The minimum stroke for mounting magnetic field resistant auto switches is 50 mm.**
2. **In order to fully use the capacity of magnetic field resistant auto switches, strictly observe the following precautions.**
   1) Do not allow the magnetic field to occur when the cylinder piston is moving.
   2) When a welding cable or welding gun electrodes are near the cylinder, change the auto switch position to fall within the operational ranges shown in the graphs on page 18, or move the welding cable away from the cylinder.
   3) Cannot be used in an environment where welding cables surround the cylinder
   4) Please consult with SMC when a welding cable and welding gun electrodes (something energized with secondary current) are near multiple auto switches.
3. **In an environment where spatter directly hits the lead wire, cover the lead wire with protective tubing.**
   Use protective tubing with inside diameter of ø8 or more that has excellent heat resistance and flexibility.
4. **Be careful not to drop objects, make dents, or apply excessive impact force when handling.**
5. **When operating two or more cylinders with magnetic field resistant auto switches in parallel and proximity, separate the auto switches from other cylinder tubes by an additional 30 mm or more.**
6. **Avoid wiring in a manner in which repeated bending stress or tension is applied to lead wires.**
7. **Please consult with SMC regarding use in an environment with constant water and coolant splashing.**
8. **Be careful of the mounting direction of the magnetic field resistant auto switch D-P79WSE.**
   Be sure to face the soft-resin mold surface to the switch mounting bracket side for mounting.
   (Refer to page 11 for mounting example and the **Web Catalog** for soft-resin mold surface.)

Wiring/Current and Voltage

1. **Always connect the auto switch to the power supply after the load has been connected.**
2. **Series connection**
   When auto switches are connected in series as shown below:
   Note that the voltage drop due to the internal resistance of the LED increases.

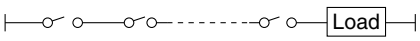

Specific Product Precautions 2

Be sure to read this before handling the products. Refer to the back cover for safety instructions. For actuator and auto switch precautions, refer to the "Handling Precautions for SMC Products" and the "Operation Manual" on the SMC website.

Data: Magnetic Field Resistant Reed Auto Switches (D-P79WSE, D-P74□) Safety Distance

Safety Distance from Side of Auto Switch

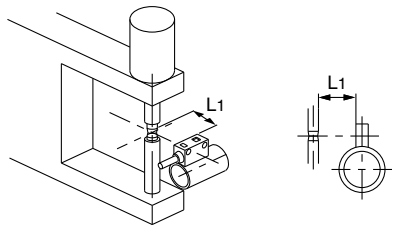

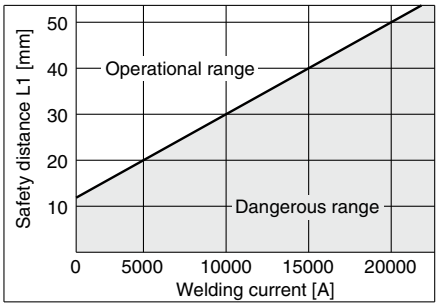

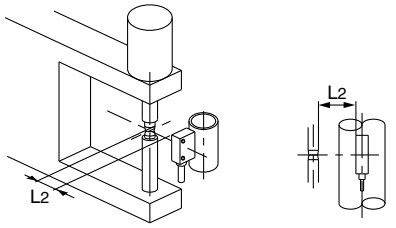

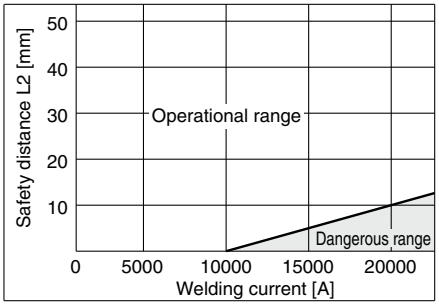

Safety Distance from Top of Auto Switch

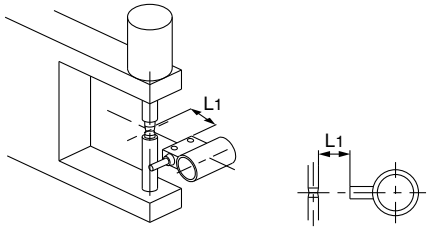

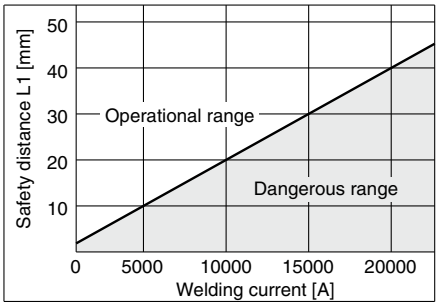

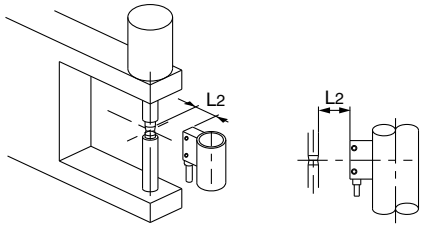

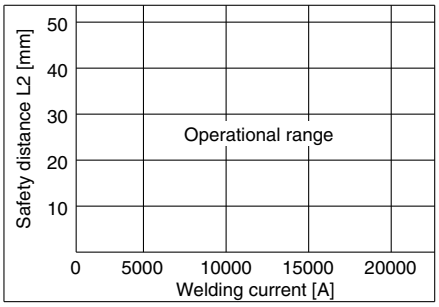

⚠ Safety Instructions

These safety instructions are intended to prevent hazardous situations and/or equipment damage. These instructions indicate the level of potential hazard with the labels of **"Caution," "Warning"** or **"Danger."** They are all important notes for safety and must be followed in addition to International Standards (ISO/IEC)*1), and other safety regulations.

⚠ Caution: **Caution** indicates a hazard with a low level of risk which, if not avoided, could result in minor or moderate injury.

⚠ Warning: **Warning** indicates a hazard with a medium level of risk which, if not avoided, could result in death or serious injury.

⚠ Danger : **Danger** indicates a hazard with a high level of risk which, if not avoided, will result in death or serious injury.

*1) ISO 4414: Pneumatic fluid power – General rules relating to systems.
ISO 4413: Hydraulic fluid power – General rules relating to systems.
IEC 60204-1: Safety of machinery – Electrical equipment of machines. (Part 1: General requirements)
ISO 10218-1: Manipulating industrial robots – Safety.
etc.

⚠ Warning

1. The compatibility of the product is the responsibility of the person who designs the equipment or decides its specifications.

Since the product specified here is used under various operating conditions, its compatibility with specific equipment must be decided by the person who designs the equipment or decides its specifications based on necessary analysis and test results. The expected performance and safety assurance of the equipment will be the responsibility of the person who has determined its compatibility with the product. This person should also continuously review all specifications of the product referring to its latest catalog information, with a view to giving due consideration to any possibility of equipment failure when configuring the equipment.

2. Only personnel with appropriate training should operate machinery and equipment.

The product specified here may become unsafe if handled incorrectly. The assembly, operation and maintenance of machines or equipment including our products must be performed by an operator who is appropriately trained and experienced.

3. Do not service or attempt to remove product and machinery/equipment until safety is confirmed.

1. The inspection and maintenance of machinery/equipment should only be performed after measures to prevent falling or runaway of the driven objects have been confirmed.
2. When the product is to be removed, confirm that the safety measures as mentioned above are implemented and the power from any appropriate source is cut, and read and understand the specific product precautions of all relevant products carefully.
3. Before machinery/equipment is restarted, take measures to prevent unexpected operation and malfunction.

4. Contact SMC beforehand and take special consideration of safety measures if the product is to be used in any of the following conditions.

1. Conditions and environments outside of the given specifications, or use outdoors or in a place exposed to direct sunlight.
2. Installation on equipment in conjunction with atomic energy, railways, air navigation, space, shipping, vehicles, military, medical treatment, combustion and recreation, or equipment in contact with food and beverages, emergency stop circuits, clutch and brake circuits in press applications, safety equipment or other applications unsuitable for the standard specifications described in the product catalog.
3. An application which could have negative effects on people, property, or animals requiring special safety analysis.
4. Use in an interlock circuit, which requires the provision of double interlock for possible failure by using a mechanical protective function, and periodical checks to confirm proper operation.

⚠ Caution

1. The product is provided for use in manufacturing industries.

The product herein described is basically provided for peaceful use in manufacturing industries.
If considering using the product in other industries, consult SMC beforehand and exchange specifications or a contract if necessary.
If anything is unclear, contact your nearest sales branch.

Limited warranty and Disclaimer/ Compliance Requirements

The product used is subject to the following "Limited warranty and Disclaimer" and "Compliance Requirements".
Read and accept them before using the product.

Limited warranty and Disclaimer

1. The warranty period of the product is 1 year in service or 1.5 years after the product is delivered, whichever is first.*2)
   Also, the product may have specified durability, running distance or replacement parts. Please consult your nearest sales branch.
2. For any failure or damage reported within the warranty period which is clearly our responsibility, a replacement product or necessary parts will be provided.
   This limited warranty applies only to our product independently, and not to any other damage incurred due to the failure of the product.
3. Prior to using SMC products, please read and understand the warranty terms and disclaimers noted in the specified catalog for the particular products.

***2) Vacuum pads are excluded from this 1 year warranty.**
A vacuum pad is a consumable part, so it is warranted for a year after it is delivered.
Also, even within the warranty period, the wear of a product due to the use of the vacuum pad or failure due to the deterioration of rubber material are not covered by the limited warranty.

Compliance Requirements

1. The use of SMC products with production equipment for the manufacture of weapons of mass destruction (WMD) or any other weapon is strictly prohibited.
2. The exports of SMC products or technology from one country to another are governed by the relevant security laws and regulations of the countries involved in the transaction. Prior to the shipment of a SMC product to another country, assure that all local rules governing that export are known and followed.

⚠ Caution

SMC products are not intended for use as instruments for legal metrology.

Measurement instruments that SMC manufactures or sells have not been qualified by type approval tests relevant to the metrology (measurement) laws of each country. Therefore, SMC products cannot be used for business or certification ordained by the metrology (measurement) laws of each country.

⚠ Safety Instructions	Be sure to read the "Handling Precautions for SMC Products" (M-E03-3) and "Operation Manual" before use.

SMC Corporation