Bar Type Ionizer

Separate Controller CE RoHS

Space saving Height 1.46 in x Width 1.18 in

Potential amplitude:
25 V or less[*1]

Rapid static neutralization:
Fastest time 0.1 s[*2]

New
Energy saving high-efficiency cartridge

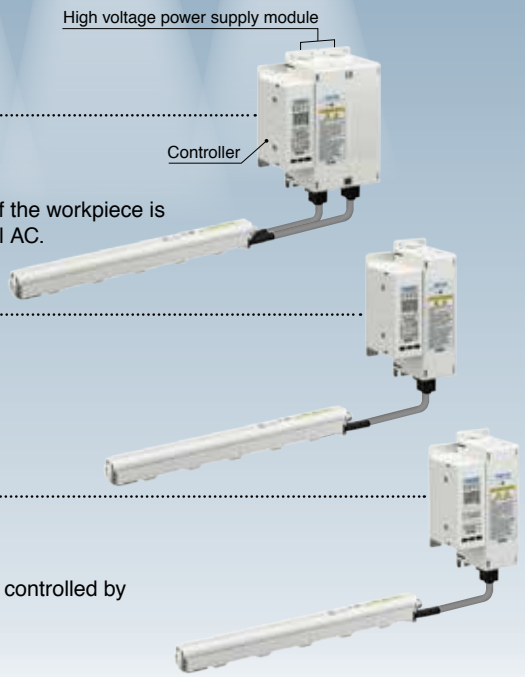

Dual AC Type
IZT42 Series
The potential amplitude of the workpiece is reduced by means of dual AC.

AC Type
IZT41 Series
Auto balance function
With external signal input/output function

Standard Type
IZT40 Series
Simple operation: Can be controlled by powering the ionizer ON

*1 IZT42 installation height: 11.81 in
*2 IZT40, 41
Conditions: Discharge time from 1000 V to 100 V
Object to be neutralized: Charged plate (5.9 in x 5.9 in, Capacitance 20 pF)
Installation distance: 3.94 in (High speed static neutralization cartridge, Tungsten emitter with air purge)
Bar length: 44.09 in

IZT40/41/42 Series

NC393-A
(ES100-120B)

Dual AC Type *IZT42 Series* (Potential amplitude reduction specification)

Potential amplitude: 25 V or less[*1]

Rapid static neutralization: 0.1 s[*2]

*1 IZT42 installation height: 300 mm
*2 IZT40, 41
Conditions: Discharge time from 1000 V to 100 V
Object to be neutralized: Charged plate (150 mm x 150 mm, Capacitance 20 pF)
Installation distance: 100 mm (High speed static neutralization cartridge, Tungsten emitter with air purge)
Bar length: 1120 mm

The potential amplitude can be reduced with SMC's original dual AC type sensor.

Static neutralization in consideration of damage to a device which is sensitive to electrostatic discharge (ESD) can be achieved. The potential amplitude applied to the applicable workpiece is reduced even if the workpiece is mounted within close proximity of the ionizer.

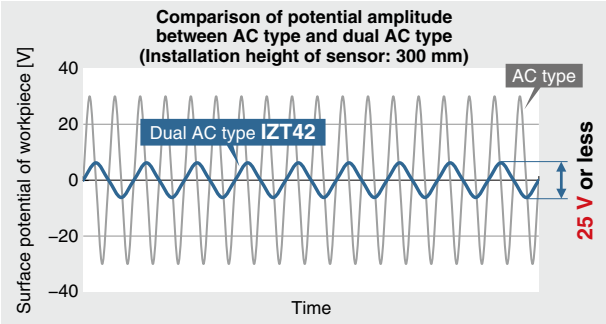

Application Examples

For the static neutralization of glass substrates

Prevents the breakage of glass substrates by the static electricity generated when the substrate is lifted from the surface plate

For the static neutralization of electric substrates

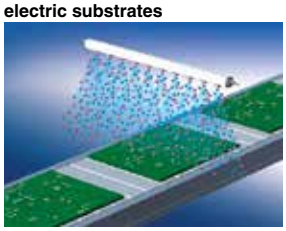

- Prevents element disruption due to discharge
- Prevents the adhesion of dust

Dual AC type IZT42

+ ions and – ions are discharged at the same time to allow the + and – ions to reach the workpiece evenly, thereby reducing the potential amplitude.

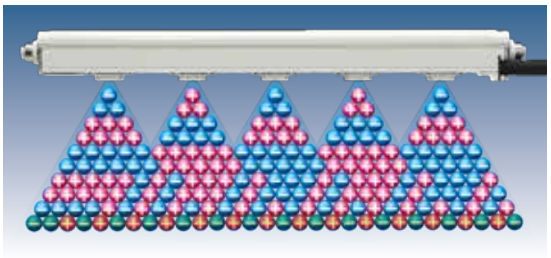

AC type IZT40, 41

+ ion and – ion layers reach the workpiece alternately, which increases the potential amplitude.

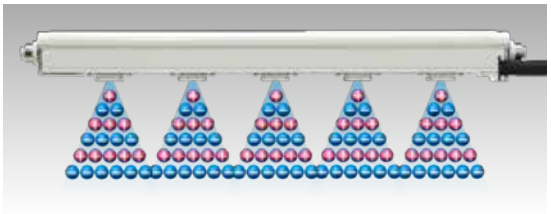

AC Type *IZT41 Series*

- **With auto balance function**

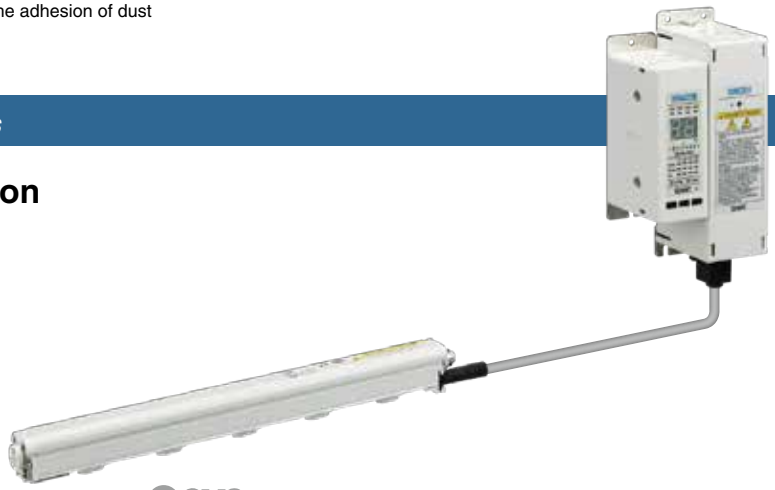

- **Emitter contamination detection continually displayed and output**
- **Individual ON/OFF command from an external input signal**

With auto balance function

The sensor is installed within the ionizer body and may be mounted anywhere.

The offset voltage (ion balance) in the static neutralization area is controlled so that the voltage is maintained at a constant value by monitoring the ions emitted from the ionizer using the ground line.

Effect of auto balance (Image)

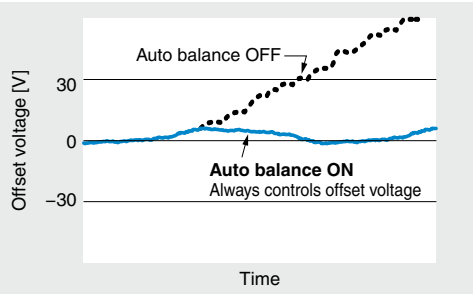

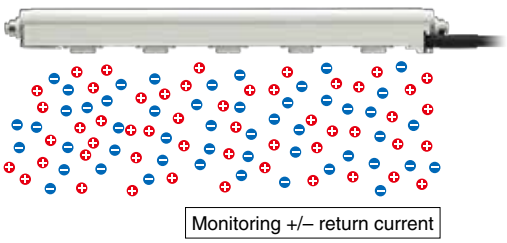

Standard Type *IZT40 Series*

- **Simple operation: Can be controlled by powering the ionizer ON**

An AC adapter is available. (The AC adapter can only be used for 1 ionizer.)

The compact body allows for space saving.

- **Height reduced by 57 mm (60%)**

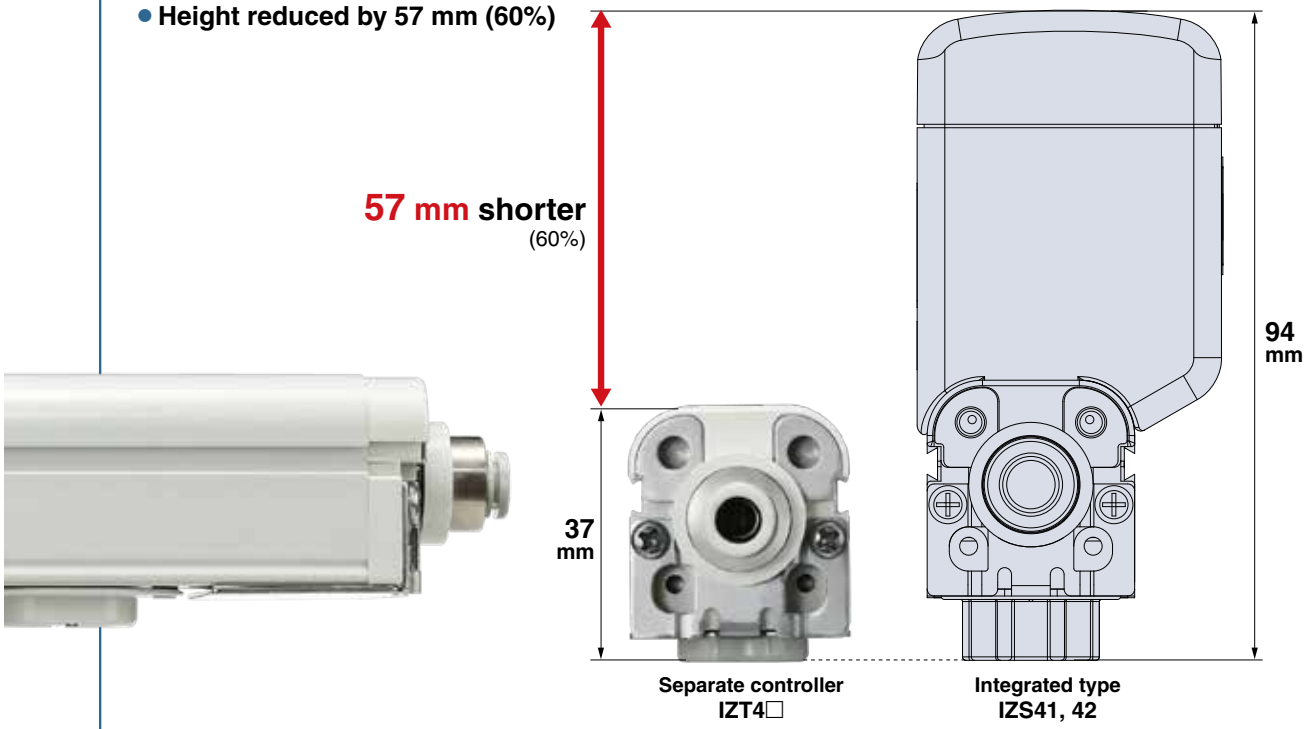

- **Can be mounted in narrow spaces**

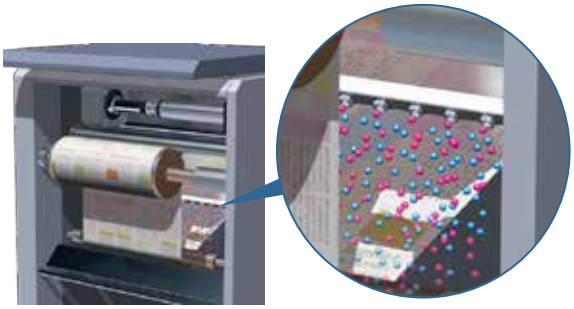

Static neutralization of a rotary press

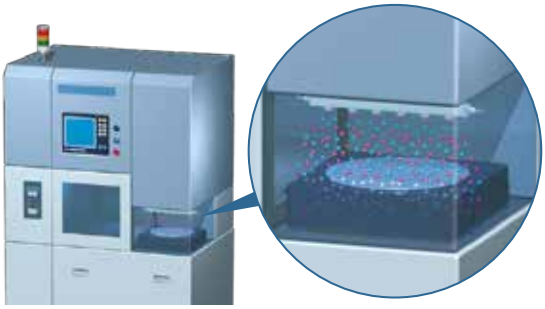

Static neutralization during wafer production

When an adjustable mounting angle is required/Bracket 1

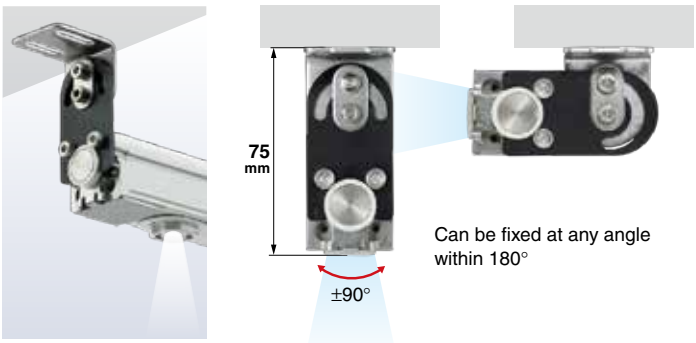

When space reduction is required/Bracket 2

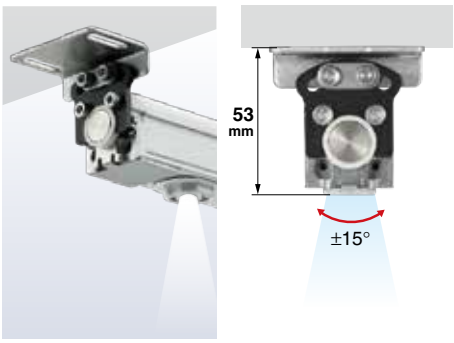

One controller can control a maximum of 4 ionizers.

Concentrated control is available.

- **Bar errors can be detected.**
- **Contamination of the emitter can be monitored.**

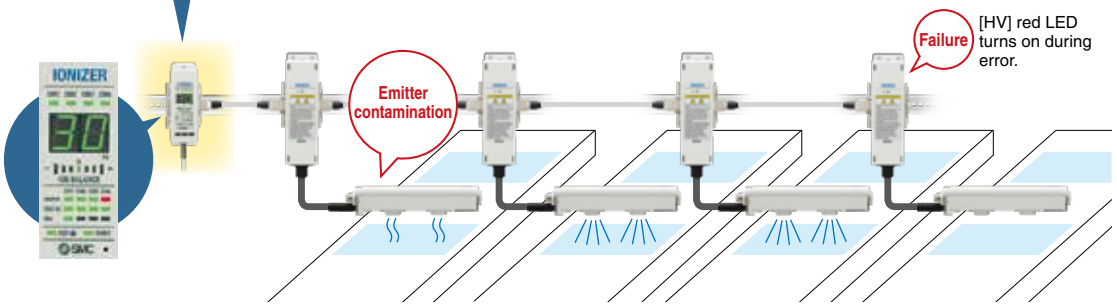

A flexible layout can be achieved due to the various module connection methods.

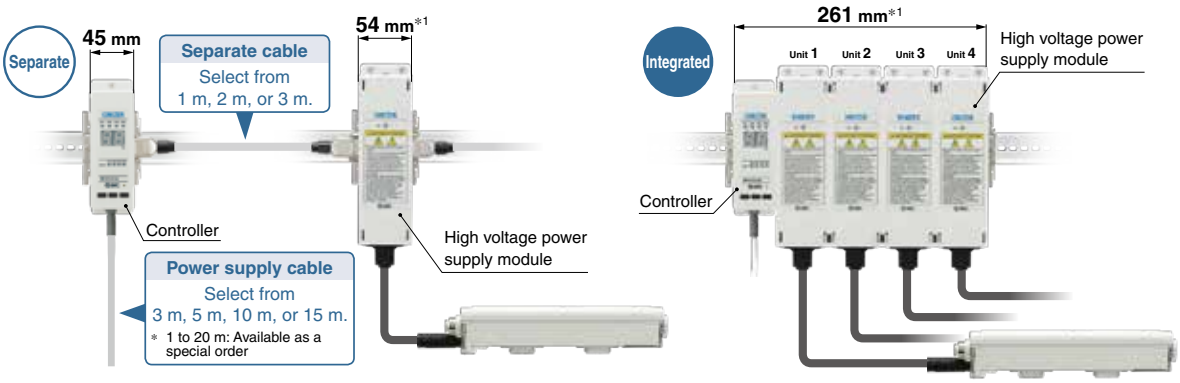

*1 For IZT40, 41

Max. installation distance between controller and bar: 15 m

The simple installation of each module is possible by connector connection.

- **The connector connection of cables is possible for each module after installation.**

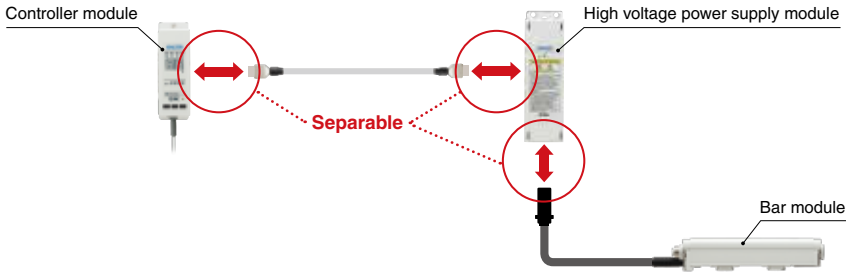

Air can be supplied by air piping on one side.

- **The optimal design of the piping port size allows for sufficient blow performance even with piping only on one side.**

Piping on both sides
Piping only on one side

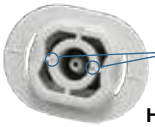

High speed static neutralization cartridge

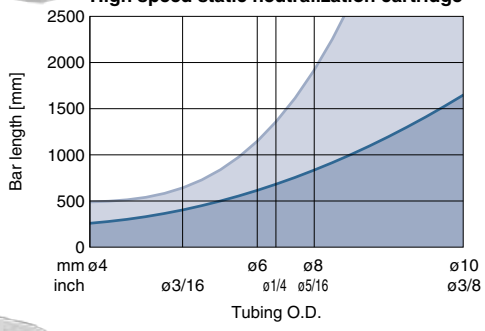

Energy saving static neutralization cartridge

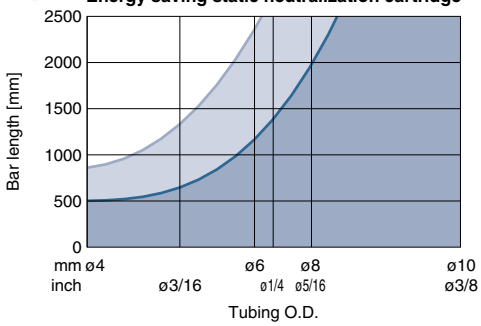

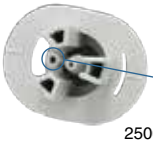

Energy saving high-efficiency cartridge

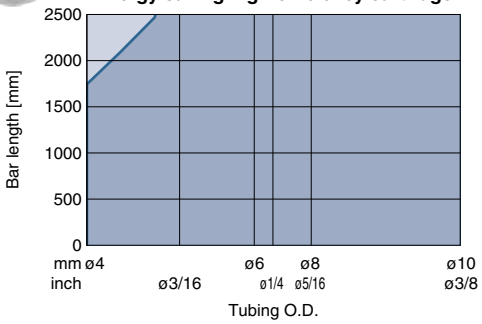

Air supply port position is selectable: Right side/Left side/Both sides

Bar and cable lengths are selectable. pp. 17, 21

Bar length: Select a length in 60 mm increments from 160 to 2500 mm.
(Includes made-to-order options)

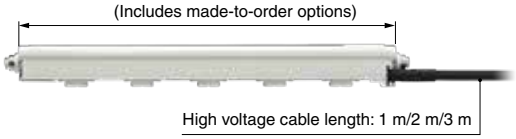

Emitter cartridge drop prevention

- **Emitter cartridge drop prevention function**
  Double-action locking

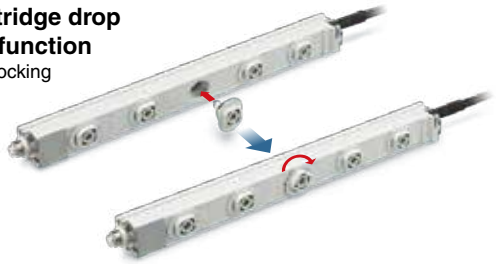

- **Drop prevention cover**
  For increased cartridge drop prevention

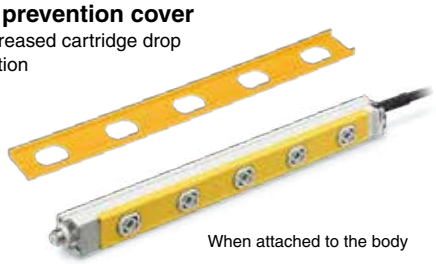

Various low maintenance cartridges can be selected according to the application.

- **Minimizes the contamination of emitters by discharging compressed air at the surface of the emitters**

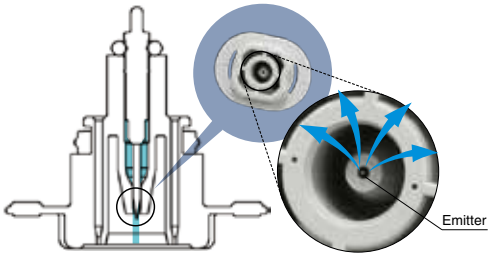

Air covers the emitter.

- **2 types of emitter materials**

Tungsten/Single crystal silicon (for silicon wafers)

Tungsten
(Emitter cartridge color: White)

Silicon
(Emitter cartridge color: Gray)

- **3 types of emitter cartridges**

High speed static neutralization cartridge

1 cartridge equipped with 2 assist air nozzles allows for high speed static neutralization by transferring ionized air produced in the emitter to the workpiece.

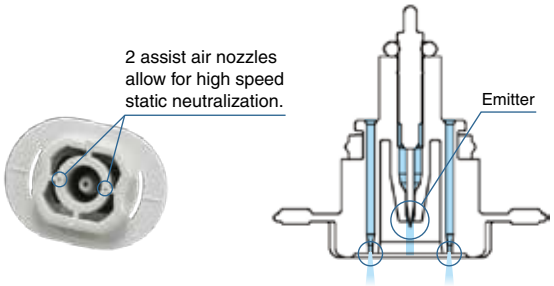

Energy saving static neutralization cartridge

Reducing the number of assist nozzles by half for static neutralization, which does not require a high volume of assist air due to the close distance to the object to be neutralized, allows for energy savings by reducing air consumption.

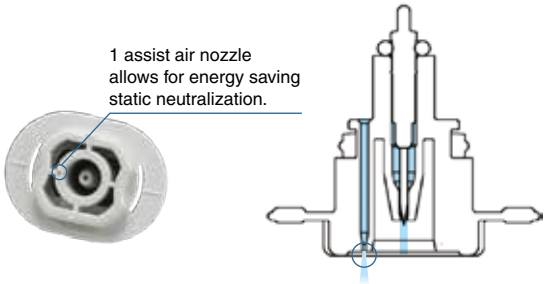

Energy saving high-efficiency cartridge

Assist air amplified by the sucking in of ambient air (the ejector effect) allows for highly efficient static neutralization through the efficient transfer of the produced ionized air.

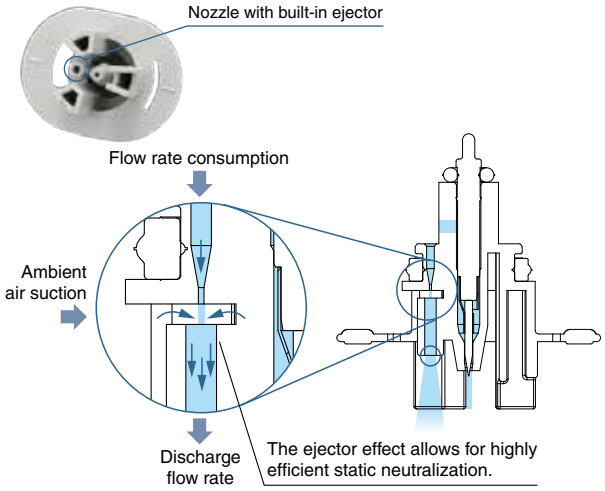

Flow rate for installation distance of each cartridge

Conditions: IZT41-112□ (Number of cartridges: 18 pcs.), Discharge time 1 s

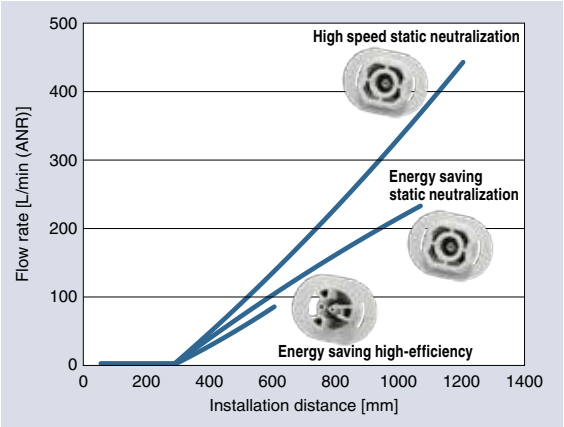

<Models and Functions>

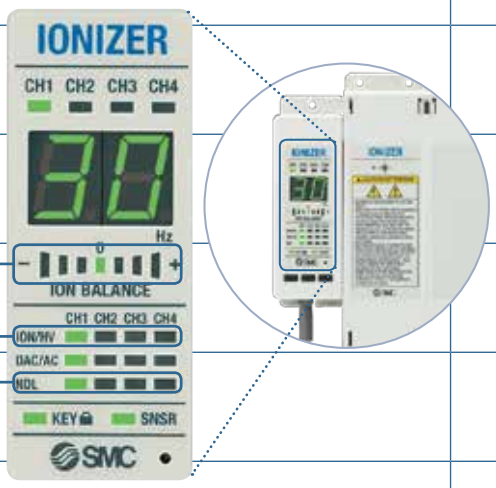

Series		IZT42	IZT41	IZT40
Method of applying voltage		Dual AC	AC, DC*1	AC, DC*1
Auto balance		●	●	—
I/O		●	●	—
Ion balance display		●	●	—
High voltage abnormality detection		●	●	●
Maintenance detection		●	●	—
Low maintenance emitter		●	●	●
Emitter cartridge type	High speed static neutralization	●	●	●
	Energy saving static neutralization	●	●	●
	Energy saving high-efficiency	●	●	●
One-touch fitting	Metric size: ø4, ø6, ø8, ø10	●	●	●
	Inch size: ø3/16", ø1/4", ø5/16", ø3/8"	●	●	●
Bracket mount		●	●	●
Made to order p. 21 · Non-standard bar length (-X10) · Model with emitter cartridge drop prevention cover (-X14)		●	●	●

*1 Apply cathode or anode to DC

<Accessories (for Individual Parts)>

Series	IZT42	IZT41	IZT40
Emitter cartridge material p. 24  Tungsten (Color: White) Silicon (Color: Gray)	●	●	●
Bar bracket p. 24 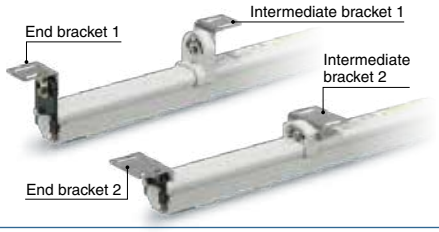 End bracket 1 Intermediate bracket 1 Intermediate bracket 2 End bracket 2	●	●	●
Power supply cable p. 24 	●	●	●
DIN rail mounting bracket for controller and high voltage power supply module p. 24 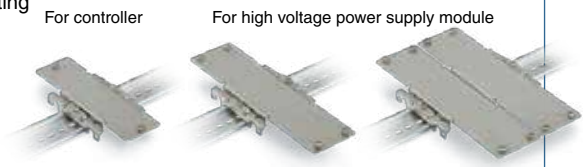 For controller For high voltage power supply module	●	●	●
High voltage cable holder p. 24  Straight Elbow	●	●	●
Drop prevention cover p. 25 	●	●	●
AC adapter (Only for use with 1 ionizer bar) p. 25 	●	●	●
Separate cable p. 25 	●	●	●
Cleaning kit p. 25 	●	●	●

<Application Examples>

For the static neutralization of resin frames

For the static neutralization of substrate cutting machines

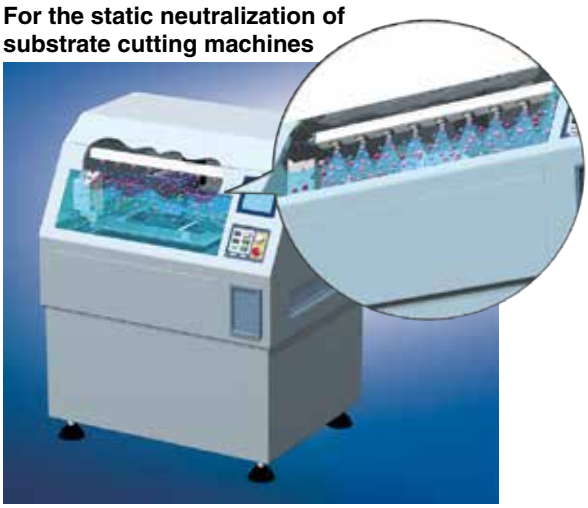

For the static neutralization of films

· Prevents the adhesion of dust
· Prevents winding failure due to wrinkles, etc.

For the static neutralization of film-molded goods

· Prevents goods from adhering to the conveyer
· Prevents the dispersion of finished goods

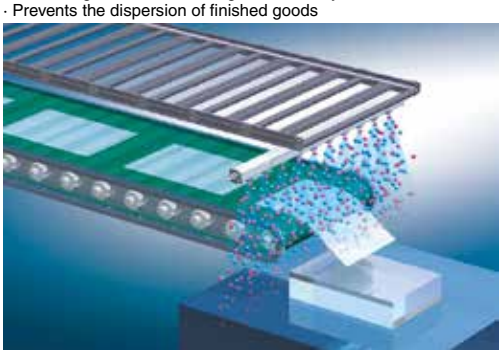

For the static neutralization during wafer transfer

· Prevents breakage due to discharge between wafers and hands

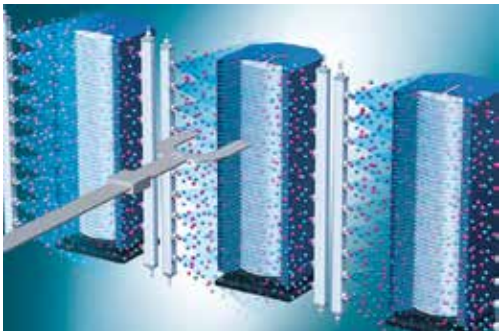

For the static neutralization of packing films

· Prevents the filled substances from adhering to packing films
· Reduces packing mistakes

For the static neutralization of lenses

· Removes dust from lenses
· Prevents the adhesion of dust

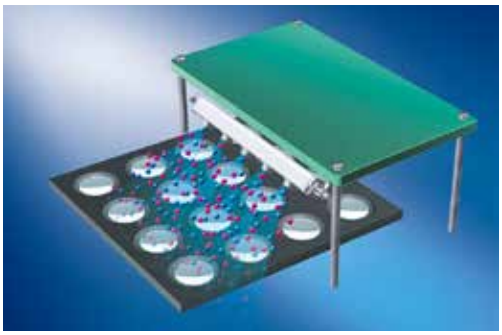

For the static neutralization of parts feeders

· Prevents the clogging of parts feeders

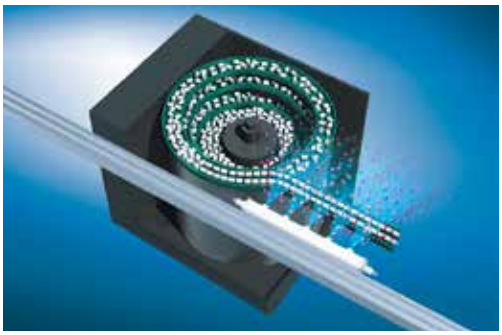

CONTENTS

Separate Controller Bar Type Ionizer
IZT40/41/42 Series

Dual AC Type
IZT42 Series

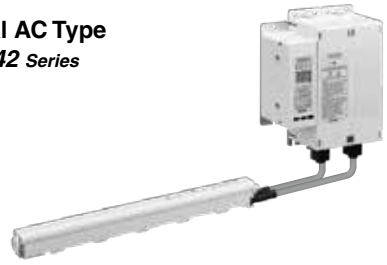

AC Type
IZT41 Series

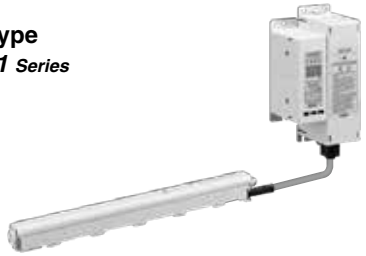

Standard Type
IZT40 Series

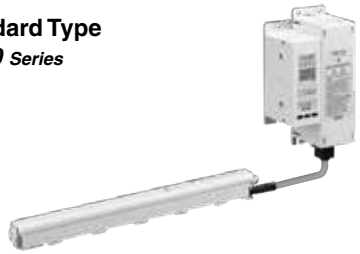

Technical Data

Static Neutralization Characteristics

∗ Static neutralization characteristics are based on data using a charged plate (dimensions: 150 mm x 150 mm, capacitance: 20 pF) as defined in the U.S. ANSI standards (ANSI/ESD STM3.1-2006). Use this data only as a guideline for model selection because the values vary depending on the material and/or size of the subject.

① Installation Distance and Discharge Time (Discharge Time from 1000 V to 100 V)

IZT40, 41 AC Mode | **IZT42 Dual AC Mode**

For cartridges without air purge

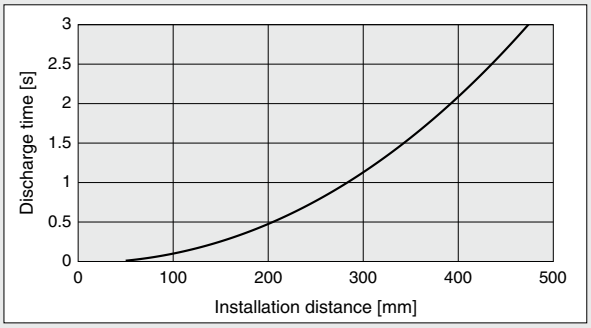

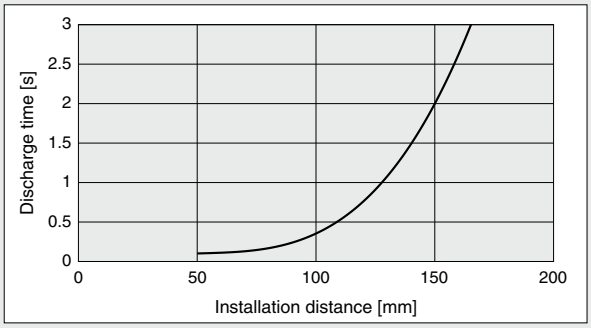

High speed static neutralization cartridge

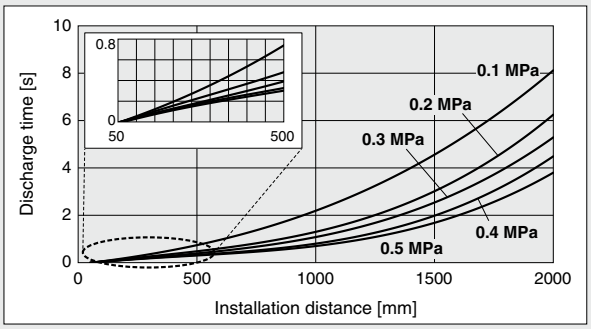

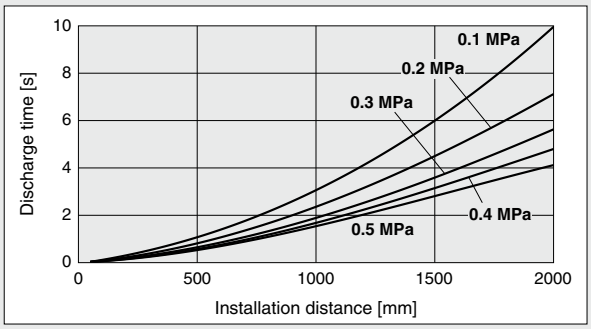

Energy saving static neutralization cartridge

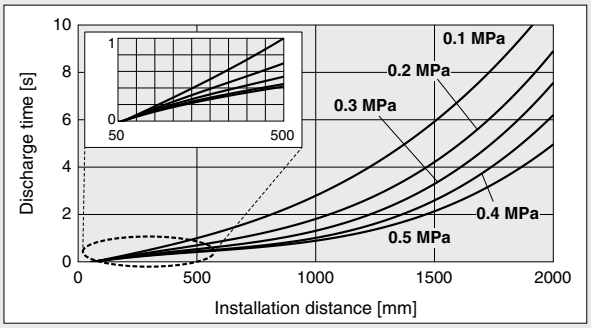

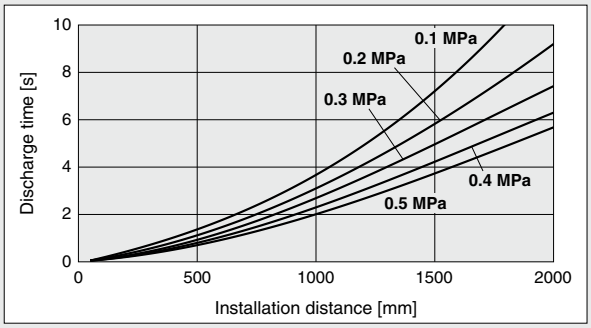

Energy saving high-efficiency cartridge

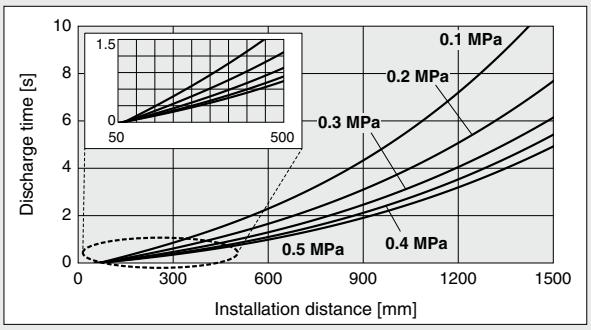

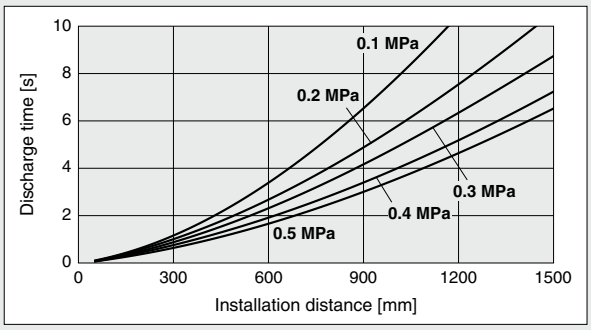

Static Neutralization Characteristics

∗ Static neutralization characteristics are based on data using a charged plate (dimensions: 150 mm x 150 mm, capacitance: 20 pF) as defined in the U.S. ANSI standards (ANSI/ESD STM3.1-2006). Use this data only as a guideline for model selection because the values vary depending on the material and/or size of the subject.

② Static Neutralization Range (Discharge Time from 1000 V to 100 V)

IZT40, 41 Ion Generation Frequency: 30 Hz

1) For cartridges without air purge

For IZT40-□D, L, V
For IZT41-□D, L, V

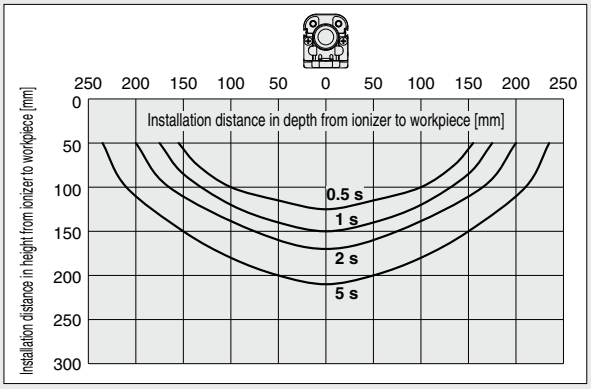

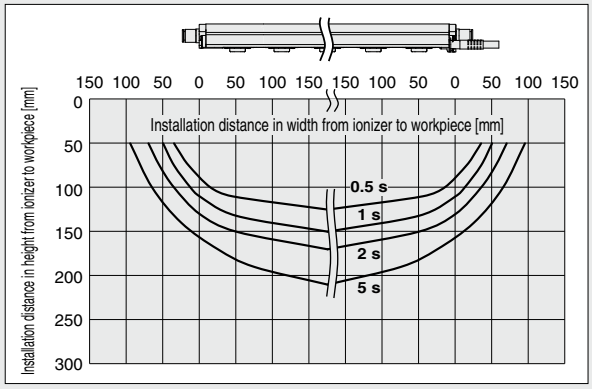

2) High speed static neutralization cartridge, Supply pressure: 0.3 MPa

For IZT40-□D
For IZT41-□D

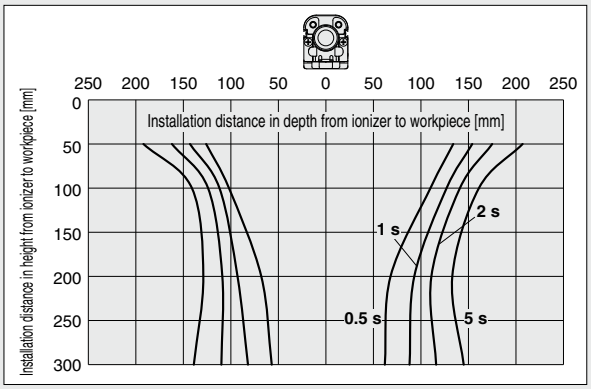

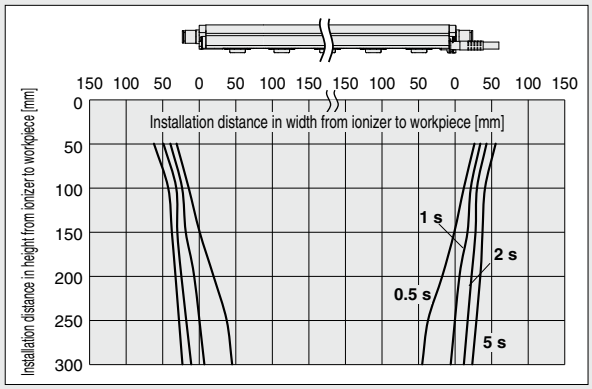

3) Energy saving static neutralization cartridge, Supply pressure: 0.3 MPa

For IZT40-□L
For IZT41-□L

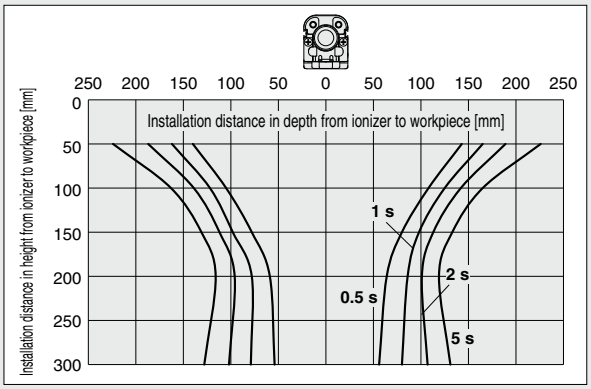

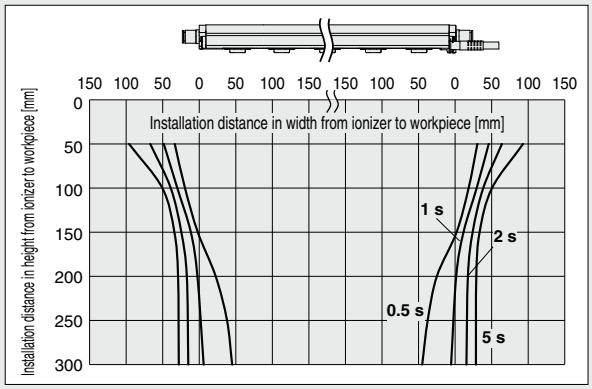

Static Neutralization Characteristics

∗ Static neutralization characteristics are based on data using a charged plate (dimensions: 150 mm x 150 mm, capacitance: 20 pF) as defined in the U.S. ANSI standards (ANSI/ESD STM3.1-2006). Use this data only as a guideline for model selection because the values vary depending on the material and/or size of the subject.

② Static Neutralization Range (Discharge Time from 1000 V to 100 V)

IZT40, 41 Ion Generation Frequency: 30 Hz

4) Energy saving high-efficiency cartridge, Supply pressure: 0.3 MPa

For IZT40-□V
For IZT41-□V

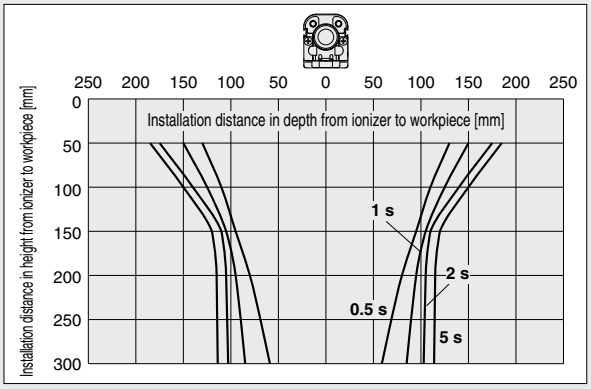

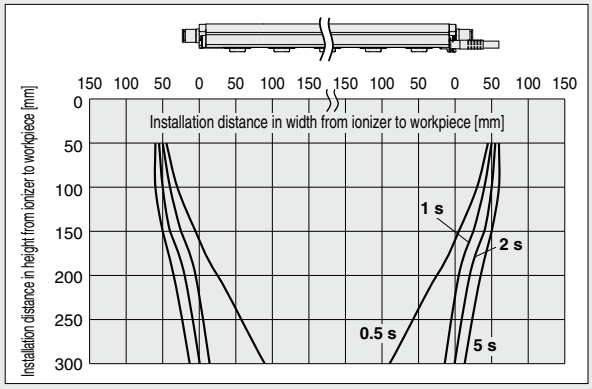

IZT42 Ion Generation Frequency: 30 Hz

1) For cartridges without air purge

For IZT42-□D, L, V

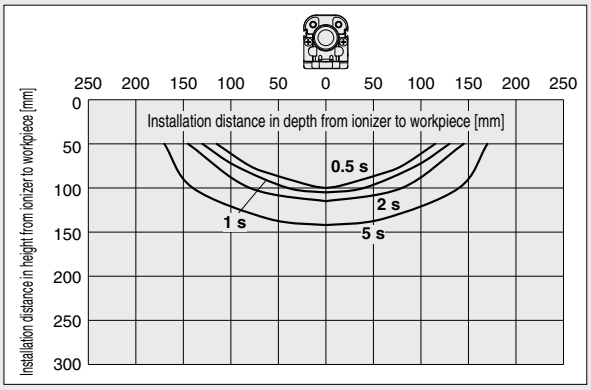

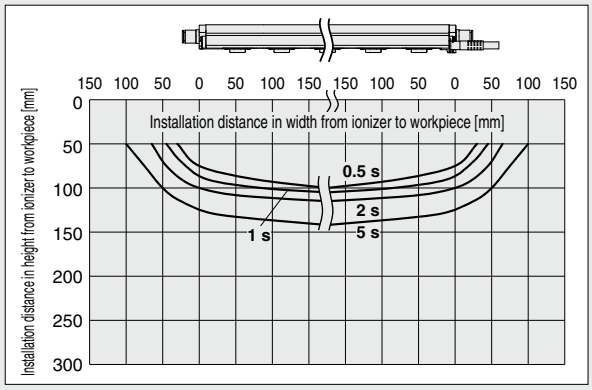

2) High speed static neutralization cartridge, Supply pressure: 0.3 MPa

For IZT42-□D

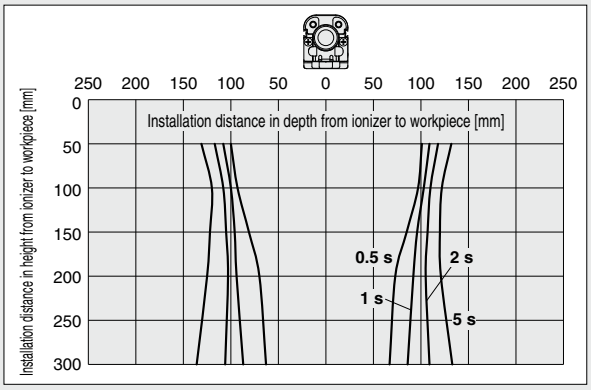

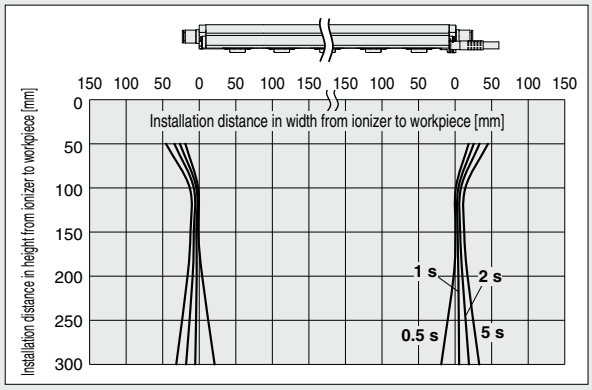

Static Neutralization Characteristics

∗ Static neutralization characteristics are based on data using a charged plate (dimensions: 150 mm x 150 mm, capacitance: 20 pF) as defined in the U.S. ANSI standards (ANSI/ESD STM3.1-2006). Use this data only as a guideline for model selection because the values vary depending on the material and/or size of the subject.

② Static Neutralization Range (Discharge Time from 1000 V to 100 V)

IZT42 Ion Generation Frequency: 30 Hz

3) Energy saving static neutralization cartridge, Supply pressure: 0.3 MPa

For IZT42-□L

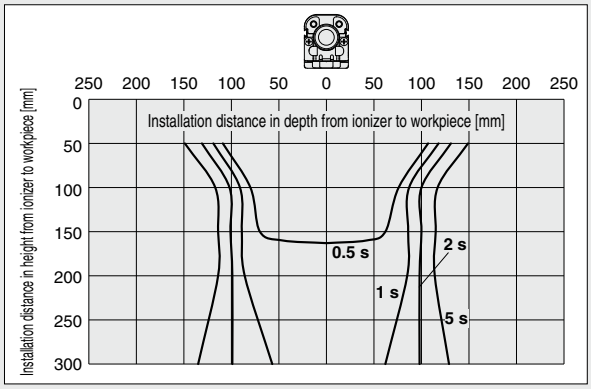

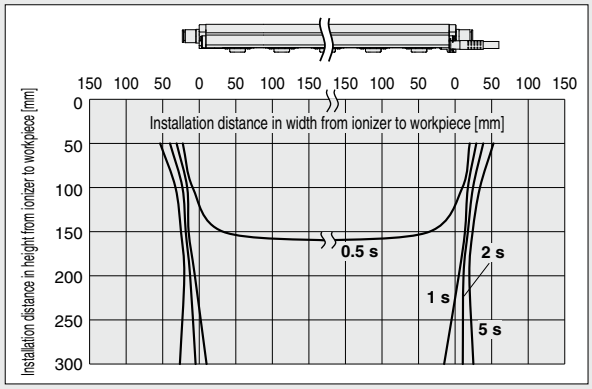

4) Energy saving high-efficiency cartridge, Supply pressure: 0.3 MPa

For IZT42-□V

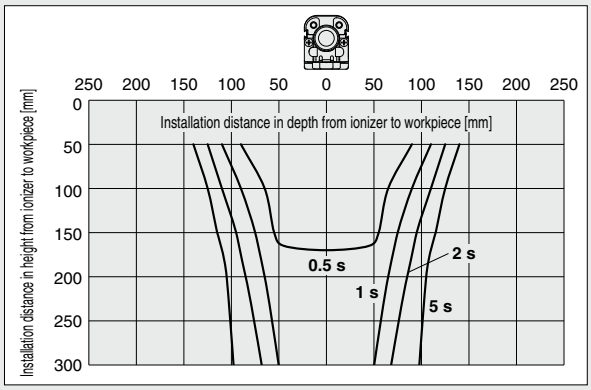

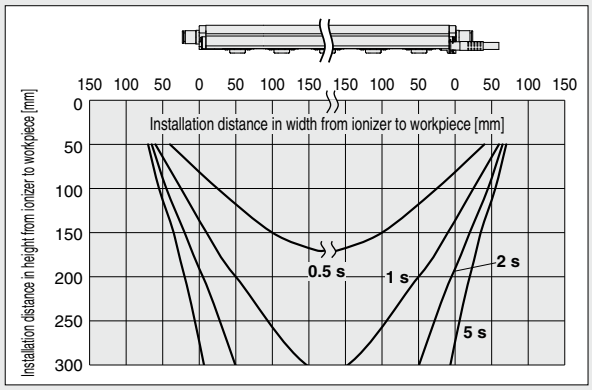

Static Neutralization Characteristics

∗ Static neutralization characteristics are based on data using a charged plate (dimensions: 150 mm x 150 mm, capacitance: 20 pF) as defined in the U.S. ANSI standards (ANSI/ESD STM3.1-2006). Use this data only as a guideline for model selection because the values vary depending on the material and/or size of the subject.

③ Potential Amplitude

IZT40, 41 Supply Pressure: 0.3 MPa

IZT42 Supply Pressure: 0.3 MPa

High speed static neutralization cartridge

For IZT40-112D
For IZT41-112D

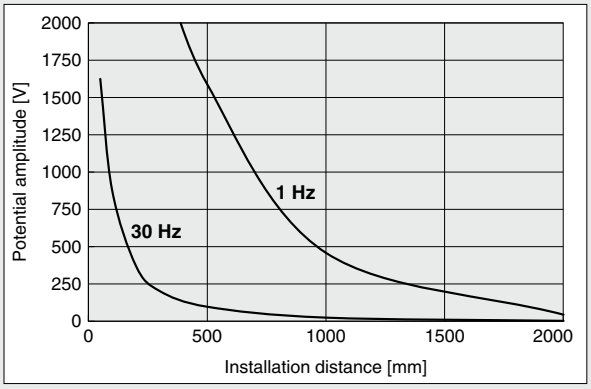

For IZT42-112D

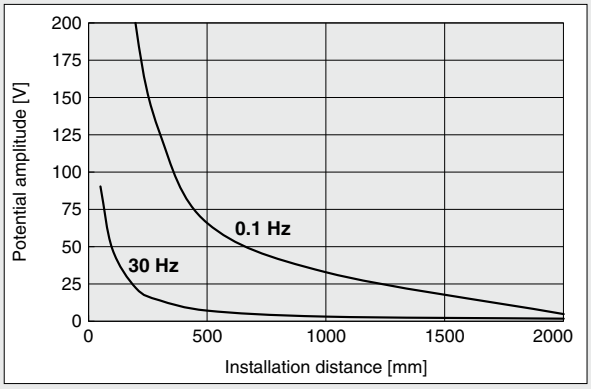

Energy saving static neutralization cartridge

For IZT40-112L
For IZT41-112L

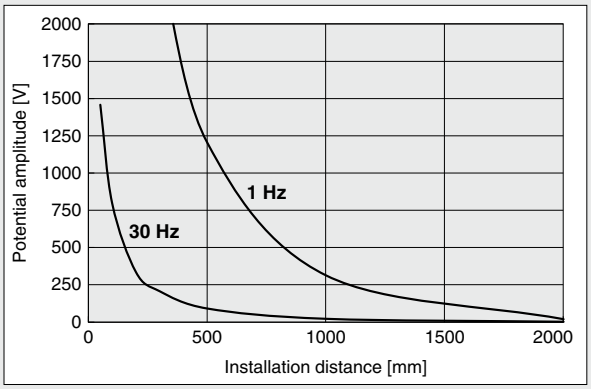

For IZT42-112L

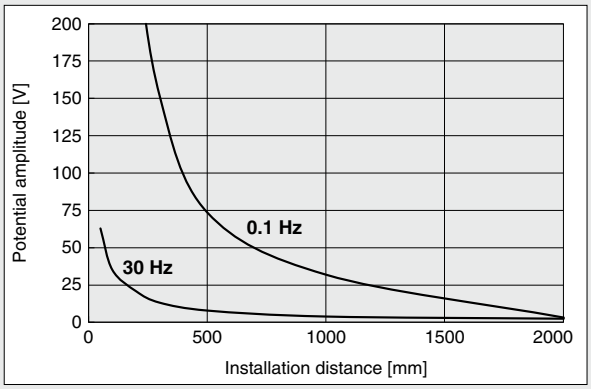

Energy saving high-efficiency cartridge

For IZT40-112V
For IZT41-112V

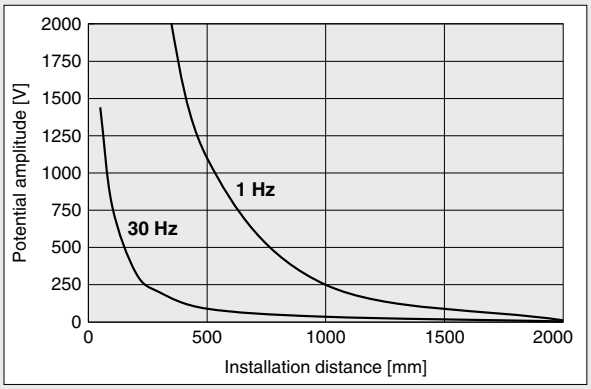

For IZT42-112V

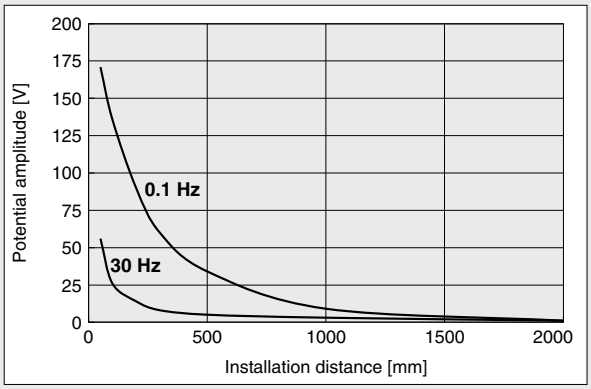

Static Neutralization Characteristics

∗ Static neutralization characteristics are based on data using a charged plate (dimensions: 150 mm x 150 mm, capacitance: 20 pF) as defined in the U.S. ANSI standards (ANSI/ESD STM3.1-2006). Use this data only as a guideline for model selection because the values vary depending on the material and/or size of the subject.

④ Pressure — Flow Rate Characteristics

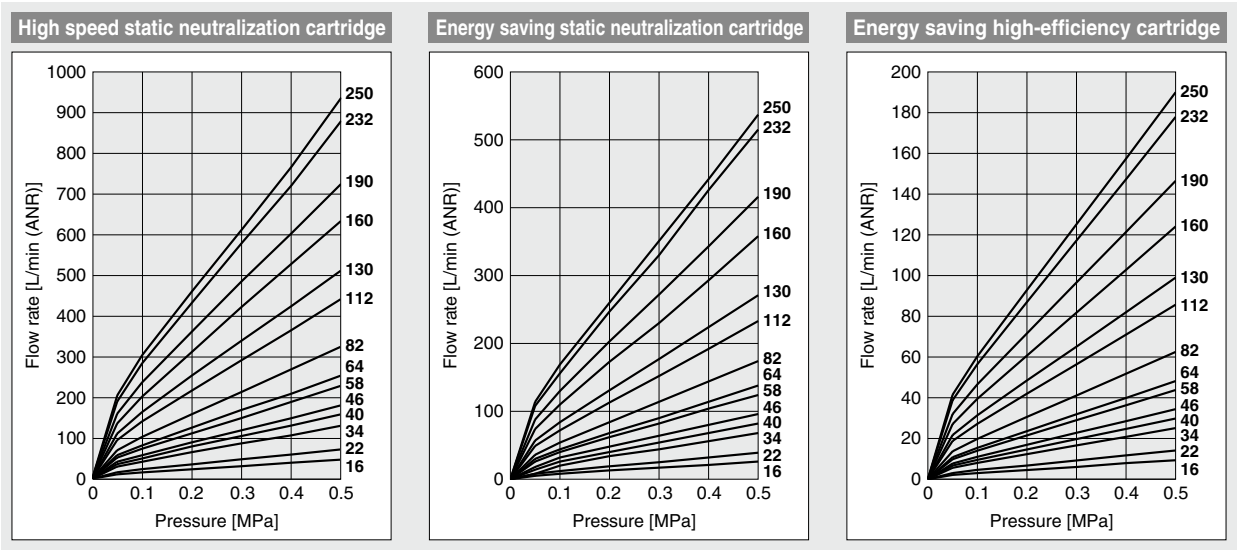

How to measure

a) Air supply from one side

IZT4□-16, 22, 34, 40, 46, 58 Connecting tube: O.D. ø6 x I.D. ø4

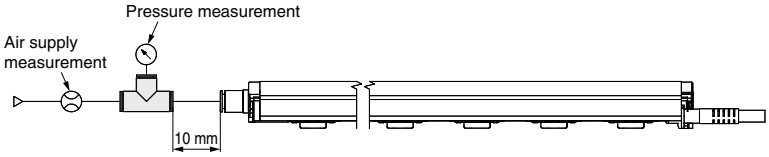

b) Air supply from both sides

IZT4□-64, 82, 112 Connecting tube: O.D. ø6 x I.D. ø4
IZT4□-130, 160, 190 Connecting tube: O.D. ø8 x I.D. ø5
IZT4□-232, 250 Connecting tube: O.D. ø10 x I.D. ø6.5

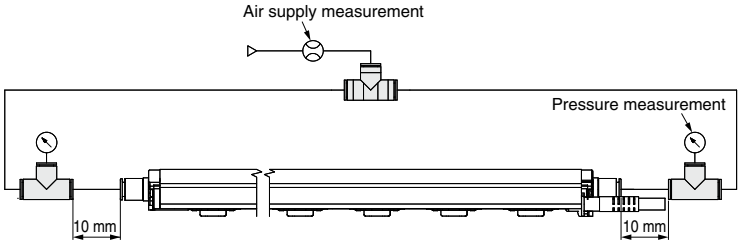

Separate Controller

Bar Type Ionizer

IZT40/41/42 Series

How to Order

Bar + High voltage power supply module + Controller

❶

IZT 40 – 34 D 1 6H R – 3 F U – X10

IZT 42 – 34 D 1 6H R ☐ – 3 F U – X10

❷ ❸ ❹ ❺ ❻ ❼ ❽ ❾ ❿ ⓫ ⓬

❶ Model

Symbol	Model
40	Standard type

❷ Model

Symbol	Model
41	AC type
42	Dual AC type

❸ Bar length

Symbol	Length [mm]	Symbol	Length [mm]
16	160	82	820
22	220	112	1120
34	340	130	1300
40	400	160	1600
46	460	190	1900
58	580	232	2320
64	640	250	2500

❹ Emitter cartridge type/ Emitter material

Symbol	Type	Material
D	High speed static neutralization cartridge	Tungsten
E		Silicon
L	Energy saving static neutralization cartridge	Tungsten
M		Silicon
V	Energy saving high-efficiency cartridge	Tungsten
S		Silicon

❺ High voltage cable length

Symbol	High voltage cable length [m]
1	1
2	2
3	3

∗ The number of high voltage cable holders differs depending on the high voltage cable length. (Refer to the table below.)

Number of high voltage cable holders

Symbol	IZT40		IZT41		IZT42	
	Straight	Elbow	Straight	Elbow	Straight	Elbow
1	1	1	1	1	2	2
2	2	1	2	1	4	2
3	3	1	3	1	6	2

❻ One-touch fitting

Symbol	Metric size
4H	ø4 Straight
6H	ø6 Straight
8H	ø8 Straight
AH	ø10 Straight
4L	ø4 Elbow
6L	ø6 Elbow
8L	ø8 Elbow
AL	ø10 Elbow

Symbol	Inch size
5H	ø3/16" Straight
7H	ø1/4" Straight
9H	ø5/16" Straight
BH	ø3/8" Straight
5L	ø3/16" Elbow
7L	ø1/4" Elbow
9L	ø5/16" Elbow
BL	ø3/8" Elbow

∗ Refer to the recommended piping port size on the next page for selecting a One-touch fitting.

∗ The position of the One-touch fitting and the plug cannot be changed after the delivery of the product.

❼ Plug position

Symbol	Position
Nil	Without plug
Q	High voltage cable side
R	Opposite side of the high voltage cable

❽ Input/Output

Symbol	Input/Output
Nil	NPN
P	PNP

∗ The input/output function cannot be used when the AC adapter is being used.

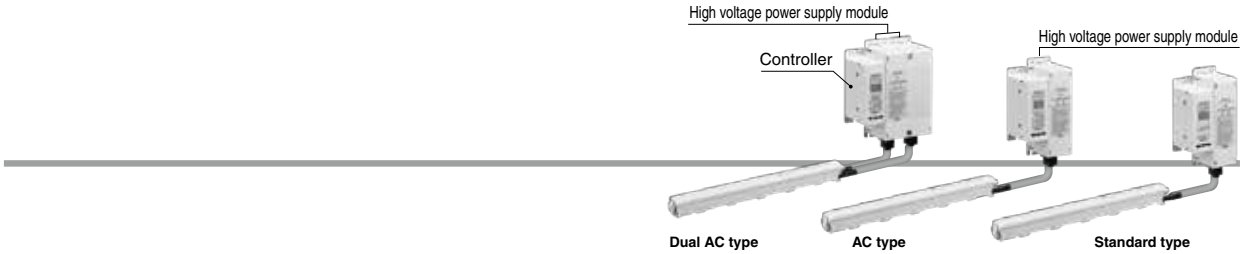

❾ Power supply cable length

Symbol	Length [m]
3	3
5	5
10	10
15	15
N	None

∗ To use AC adapter, specify "N", and select AC adapter sold separately.

❿ Bar bracket

Symbol	Type
Nil	Without bracket
B	With bracket 1
F	With bracket 2

∗ The number of intermediate brackets differs depending on the bar length. (Refer to the table below.)

Number of brackets

Bar length [mm]	End bracket	Intermediate bracket
160 to 760	2	None
820 to 1600		1
1660 to 2380		2
2440 to 2500		3

⓫ DIN rail mounting bracket for controller and high voltage power supply module ⇨ page 24

Symbol	For controller	For high voltage power supply module
Nil	None	None
U	Included	Included
W	Included	None
Y	None	Included

⓬ Made to order ⇨ page 21

Symbol	Description
-X10	Non-standard bar length
-X14	Model with drop prevention cover

Recommended piping port size for the IZT4□
High speed static neutralization cartridge

One-touch fitting symbol	Applicable tubing O.D.	Bar length [mm]													
		160	**220**	**340**	**400**	**460**	**580**	**640**	**820**	**1120**	**1300**	**1600**	**1900**	**2320**	**2500**
4H/4L	**ø4 mm**	○	○	●	●	●	—	—	—	—	—	—	—	—	—
6H/6L	**ø6 mm**	○	○	○	○	○	○	●	●	●	—	—	—	—	—
8H/8L	**ø8 mm**	○	○	○	○	○	○	○	○	●	●	●	●	—	—
AH/AL	**ø10 mm**	○	○	○	○	○	○	○	○	○	○	○	●	●	●
5H/5L	**ø3/16"**	○	○	○	○	●	●	●	—	—	—	—	—	—	—
7H/7L	**ø1/4"**	○	○	○	○	○	○	○	●	●	●	—	—	—	—
9H/9L	**ø5/16"**	○	○	○	○	○	○	○	○	●	●	●	●	—	—
BH/BL	**ø3/8"**	○	○	○	○	○	○	○	○	○	○	○	●	●	●

○: With piping only on one side ●: With piping on both sides —: Unrecommended piping

Energy saving static neutralization cartridge

One-touch fitting symbol	Applicable tubing O.D.	Bar length [mm]													
		160	**220**	**340**	**400**	**460**	**580**	**640**	**820**	**1120**	**1300**	**1600**	**1900**	**2320**	**2500**
4H/4L	**ø4 mm**	○	○	○	○	○	●	●	●	—	—	—	—	—	—
6H/6L	**ø6 mm**	○	○	○	○	○	○	○	○	○	●	●	●	●	—
8H/8L	**ø8 mm**	○	○	○	○	○	○	○	○	○	○	○	○	●	●
AH/AL	**ø10 mm**	○	○	○	○	○	○	○	○	○	○	○	○	○	○
5H/5L	**ø3/16"**	○	○	○	○	○	○	○	●	●	●	—	—	—	—
7H/7L	**ø1/4"**	○	○	○	○	○	○	○	○	○	○	●	●	●	●
9H/9L	**ø5/16"**	○	○	○	○	○	○	○	○	○	○	○	○	●	●
BH/BL	**ø3/8"**	○	○	○	○	○	○	○	○	○	○	○	○	○	○

○: With piping only on one side ●: With piping on both sides —: Unrecommended piping

Energy saving high-efficiency cartridge

One-touch fitting symbol	Applicable tubing O.D.	Bar length [mm]													
		160	**220**	**340**	**400**	**460**	**580**	**640**	**820**	**1120**	**1300**	**1600**	**1900**	**2320**	**2500**
4H/4L	**ø4 mm**	○	○	○	○	○	○	○	○	○	○	○	●	●	●
6H/6L	**ø6 mm**	○	○	○	○	○	○	○	○	○	○	○	○	○	○
8H/8L	**ø8 mm**	○	○	○	○	○	○	○	○	○	○	○	○	○	○
AH/AL	**ø10 mm**	○	○	○	○	○	○	○	○	○	○	○	○	○	○
5H/5L	**ø3/16"**	○	○	○	○	○	○	○	○	○	○	○	○	○	○
7H/7L	**ø1/4"**	○	○	○	○	○	○	○	○	○	○	○	○	○	○
9H/9L	**ø5/16"**	○	○	○	○	○	○	○	○	○	○	○	○	○	○
BH/BL	**ø3/8"**	○	○	○	○	○	○	○	○	○	○	○	○	○	○

○: With piping only on one side ●: With piping on both sides

For Individual Parts

How to Order

Bar

IZTB 40 – 16 D 1 6H R – F – X10

❶ ❷ ❸ ❹ ❺ ❻ ❼ ❽

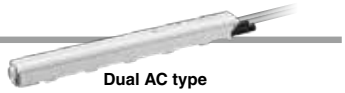

Dual AC type

Standard, AC type

❶ Model

Symbol	Model
40	Standard type (For IZT40), AC type (For IZT41)
42	Dual AC type (For IZT42)

❷ Bar length

Symbol	Length [mm]	Symbol	Length [mm]
16	160	**82**	820
22	220	**112**	1120
34	340	**130**	1300
40	400	**160**	1600
46	460	**190**	1900
58	580	**232**	2320
64	640	**250**	2500

❸ Emitter cartridge type

Symbol	Type	Material
D	High speed static neutralization cartridge	Tungsten
E		Silicon
L	Energy saving static neutralization cartridge	Tungsten
M		Silicon
V	Energy saving high-efficiency cartridge	Tungsten
S		Silicon

❹ High voltage cable length

Symbol	High voltage cable length [m]
1	1
2	2
3	3

∗ The number of high voltage cable holders differs depending on the high voltage cable length. (Refer to the table below.)

Number of high voltage cable holders

Symbol	IZT40		IZT41		IZT42	
	Straight	Elbow	Straight	Elbow	Straight	Elbow
1	1	1	1	1	2	2
2	2	1	2	1	4	2
3	3	1	3	1	6	2

❺ One-touch fitting

Symbol	Metric size
4H	ø4 Straight
6H	ø6 Straight
8H	ø8 Straight
AH	ø10 Straight
4L	ø4 Elbow
6L	ø6 Elbow
8L	ø8 Elbow
AL	ø10 Elbow

Symbol	Inch size
5H	ø3/16" Straight
7H	ø1/4" Straight
9H	ø5/16" Straight
BH	ø3/8" Straight
5L	ø3/16" Elbow
7L	ø1/4" Elbow
9L	ø5/16" Elbow
BL	ø3/8" Elbow

∗ Refer to the table below for selecting a One-touch fitting.

∗ The position of the One-touch fitting and the plug cannot be changed after the delivery of the product.

❻ Plug position

Symbol	Position
Nil	Without plug
Q	High voltage cable side
R	Opposite side of the high voltage cable

❼ Bar bracket

Symbol	Type
Nil	Without bracket
B	With bracket 1
F	With bracket 2

∗ The number of intermediate brackets differs depending on the bar length. (Refer to the table below.)

Number of brackets

Bar length	End bracket	Intermediate bracket
160 to 760	2	None
820 to 1600		1
1660 to 2380		2
2440 to 2500		3

❽ Made to order ⇨ page 21

Symbol	Description
-X10	Non-standard bar length
-X14	Model with drop prevention cover

Recommended piping port size for the IZT4□

High speed static neutralization cartridge

One-touch fitting symbol	Applicable tubing O.D.	Bar length [mm]													
		160	220	340	400	460	580	640	820	1120	1300	1600	1900	2320	2500
4H/4L	**ø4 mm**	○	○	●	●	●	—	—	—	—	—	—	—	—	—
6H/6L	**ø6 mm**	○	○	○	○	○	○	●	●	●	—	—	—	—	—
8H/8L	**ø8 mm**	○	○	○	○	○	○	○	○	●	●	●	●	—	—
AH/AL	**ø10 mm**	○	○	○	○	○	○	○	○	○	○	○	●	●	●
5H/5L	**ø3/16"**	○	○	○	○	●	●	●	—	—	—	—	—	—	—
7H/7L	**ø1/4"**	○	○	○	○	○	○	○	●	●	●	—	—	—	—
9H/9L	**ø5/16"**	○	○	○	○	○	○	○	○	●	●	●	●	—	—
BH/BL	**ø3/8"**	○	○	○	○	○	○	○	○	○	○	○	●	●	●

○: With piping only on one side ●: With piping on both sides —: Unrecommended piping

Energy saving static neutralization cartridge

One-touch fitting symbol	Applicable tubing O.D.	Bar length [mm]													
		160	220	340	400	460	580	640	820	1120	1300	1600	1900	2320	2500
4H/4L	**ø4 mm**	○	○	○	○	○	●	●	●	—	—	—	—	—	—
6H/6L	**ø6 mm**	○	○	○	○	○	○	○	○	○	●	●	●	●	—
8H/8L	**ø8 mm**	○	○	○	○	○	○	○	○	○	○	○	○	●	●
AH/AL	**ø10 mm**	○	○	○	○	○	○	○	○	○	○	○	○	○	○
5H/5L	**ø3/16"**	○	○	○	○	○	○	○	●	●	●	—	—	—	—
7H/7L	**ø1/4"**	○	○	○	○	○	○	○	○	○	○	●	●	●	●
9H/9L	**ø5/16"**	○	○	○	○	○	○	○	○	○	○	○	○	●	●
BH/BL	**ø3/8"**	○	○	○	○	○	○	○	○	○	○	○	○	○	○

○: With piping only on one side ●: With piping on both sides —: Unrecommended piping

Energy saving high-efficiency cartridge

One-touch fitting symbol	Applicable tubing O.D.	Bar length [mm]													
		160	220	340	400	460	580	640	820	1120	1300	1600	1900	2320	2500
4H/4L	**ø4 mm**	○	○	○	○	○	○	○	○	○	○	○	●	●	●
6H/6L	**ø6 mm**	○	○	○	○	○	○	○	○	○	○	○	○	○	○
8H/8L	**ø8 mm**	○	○	○	○	○	○	○	○	○	○	○	○	○	○
AH/AL	**ø10 mm**	○	○	○	○	○	○	○	○	○	○	○	○	○	○
5H/5L	**ø3/16"**	○	○	○	○	○	○	○	○	○	○	○	○	○	○
7H/7L	**ø1/4"**	○	○	○	○	○	○	○	○	○	○	○	○	○	○
9H/9L	**ø5/16"**	○	○	○	○	○	○	○	○	○	○	○	○	○	○
BH/BL	**ø3/8"**	○	○	○	○	○	○	○	○	○	○	○	○	○	○

○: With piping only on one side ●: With piping on both sides

High voltage power supply module

IZTP 42

❶

Standard, AC type

Dual AC type

❶ Model

Symbol	Model
40	Standard type (For IZT40)
41	AC type (For IZT41)
42	Dual AC type (For IZT42)

Controller

IZTC 40 – 3

IZTC 41 – ☐ 3

❶ ❷ ❸

Standard type

AC, Dual AC type

❶ Controller type

Symbol	Model
40	Standard type (For IZT40)
41	AC type (For IZT41), Dual AC type (For IZT42)

❷ Input/Output

Symbol	Input/Output
Nil	NPN
P	PNP

❸ Power supply cable length

Symbol	Length [m]
3	3
5	5
10	10
15	15
N	None

Made to Order

Symbol	Description	Specifications
-X10	Non-standard bar length	Manufacturable bar length [mm]: 100 + 60 x n (n: Integer from 1 to 39) (For n = 1, 2, 4, 5, 6, 8, 9, 12, 17, 20, 25, 30, and 37, use a standard model.)

Bar + **High voltage power supply module** + **Controller**

IZT 40 – 52 D 1 6H R – F –X10

IZT 42 – 52 D 1 6H R – F –X10

Bar

IZTB 40 – 52 D 1 6H R – F –X10

Standard model no. ⇨ pages 17 and 18

Type

40
41∗1
42

∗1 Only bar is ordered, 41 cannot be selected.

Bar length

Symbol	Bar length [mm]	Symbol	Bar length [mm]	Symbol	Bar length [mm]
28	280	**124**	1240	**196**	1960
52	520	**136**	1360	**202**	2020
70	700	**142**	1420	**208**	2080
76	760	**148**	1480	**214**	2140
88	880	**154**	1540	**220**	2200
94	940	**166**	1660	**226**	2260
100	1000	**172**	1720	**238**	2380
106	1060	**178**	1780	**244**	2440
118	1180	**184**	1840		

Symbol	Description	Specifications
-X14	Model with drop prevention cover	The main unit is shipped fitted with a drop prevention cover available as an option.

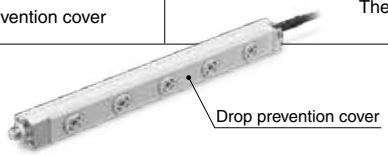

Bar + **High voltage power supply module** + **Controller**

IZT 40 – 34 D 1 6H R – F –X14

IZT 42 – 34 D 1 6H R – F –X14

Bar

IZTB 40 – 34 D 1 6H R – F –X14

Standard model no. ⇨ pages 17 and 18

Type

40
41∗1
42

∗1 Only bar is ordered, 41 cannot be selected.

Bar length

Standard	Symbol	**16**	**22**	**34**	**40**	**46**	**58**	**64**	**82**	**112**	**130**	**160**	**190**	**232**	**250**
	Length [mm]	160	220	340	400	460	580	640	820	1120	1300	1600	1900	2320	2500
Non-standard	The bar of non-standard length is available. Refer to the how to order above.														

Specifications

Ionizer model		IZT40	IZT41 (NPN)	IZT41 (PNP)	IZT42 (NPN)	IZT42 (PNP)
Ion generation method		Corona discharge type				
Method of applying voltage		AC, DC*1	AC, DC*1		Dual AC	
Applied voltage		±7000 V			±6000 V	
Offset voltage*2		Within ±30 V				
Air purge	**Fluid**	Air (Clean dry air)				
	Operating pressure	0.5 MPa or less				
	Proof pressure	0.7 MPa				
	Connecting tube size (One side can be plugged)	Metric size: ø4, ø6, ø8, ø10 Inch size: ø3/16", ø1/4", ø5/16", ø3/8"				
Current consumption		0.7 A or less (+0.6 A or less per ionizer when connected)	0.8 A or less (+0.7 A or less per ionizer when connected)		1.4 A or less (+1.3 A or less per ionizer when connected)	
Power supply voltage		24 VDC ±10% (100 to 240 VAC: AC adapter option: Applicable when only one bar is used)				
Input signal	**Ion generation stop signal**	—	Connected to DC (–) Voltage range: 5 VDC or less Current consumption: 5 mA or less	Connected to DC (+) Voltage range: 19 VDC to power supply voltage Current consumption: 5 mA or less	Connected to DC (–) Voltage range: 5 VDC or less Current consumption: 5 mA or less	Connected to DC (+) Voltage range: 19 VDC to power supply voltage Current consumption: 5 mA or less
Output signal	**Maintenance detection signal**	—	Max. load current: 100 mA Residual voltage: 1 V or less (Load current at 100 mA) Max. applied voltage: 26.4 VDC	Max. load current: 100 mA Residual voltage: 1 V or less (Load current at 100 mA)	Max. load current: 100 mA Residual voltage: 1 V or less (Load current at 100 mA) Max. applied voltage: 26.4 VDC	Max. load current: 100 mA Residual voltage: 1 V or less (Load current at 100 mA)
	Error signal					
Function		High voltage abnormality detection (Ion generation stops when abnormality is detected)	Auto balance, Maintenance detection, High voltage abnormality detection (Ion generation stops when abnormality is detected), and Ion generation stop input			
Effective static neutralization distance		50 to 2000 mm				
Ambient and fluid temperatures	**Controller, High voltage power supply module**	0 to 40°C				
	Bar	0 to 50°C				
Ambient humidity		35 to 80%Rh (No condensation)				
Material	**Controller**	Cover: ABS, Aluminum, Switch: Silicone rubber				
	High voltage power supply module	Cover: ABS, Aluminum				
	Bar	Cover: ABS, Emitter cartridge: PBT, Emitter: Tungsten or Single crystal silicon, High voltage cable: Silicone rubber, PVC				
Standards/Directive		CE (EMC Directive)				

*1 Apply cathode or anode to DC
*2 When the air purge is performed between a charged object and an ionizer at a distance of 300 mm

Weight

[g]

	Controller	High voltage power supply module
IZT40	210	680
IZT41	210	680
IZT42	210	1350

Number of Emitter Cartridges/Bar Weight

[g]

Bar length symbol		16	22	34	40	46	58	64	82	112	130	160	190	232	250
Number of emitter cartridges (pcs.)		2	3	5	6	7	9	10	13	18	21	26	31	38	41
IZT40 IZT41 (Common for bars)	**High voltage cable (1 m)**	360	420	530	590	650	760	820	990	1270	1440	1720	2010	2410	2580
	High voltage cable (2 m)	490	550	660	720	780	890	950	1120	1400	1570	1850	2140	2540	2710
	High voltage cable (3 m)	610	670	780	840	900	1010	1070	1240	1520	1690	1970	2260	2660	2830
IZT42	**High voltage cable (1 m)**	520	580	690	750	810	920	980	1150	1430	1600	1880	2170	2570	2740
	High voltage cable (2 m)	770	830	940	1000	1060	1170	1230	1400	1680	1850	2130	2420	2820	2990
	High voltage cable (3 m)	1010	1070	1180	1240	1300	1410	1470	1640	1920	2090	2370	2660	3060	3230

AC Adapter (Sold Separately) ⇨ page 25

Model	IZT40-CG1, IZT40-CG2
Input voltage	100 to 240 VAC, 50/60 Hz
Output current	1.9 A
Ambient temperature	0 to 40°C
Ambient humidity	35 to 65%Rh (No condensation)
Weight	375 g
Standards/Directive	CE, cUL

Construction

IZT40, 41 series

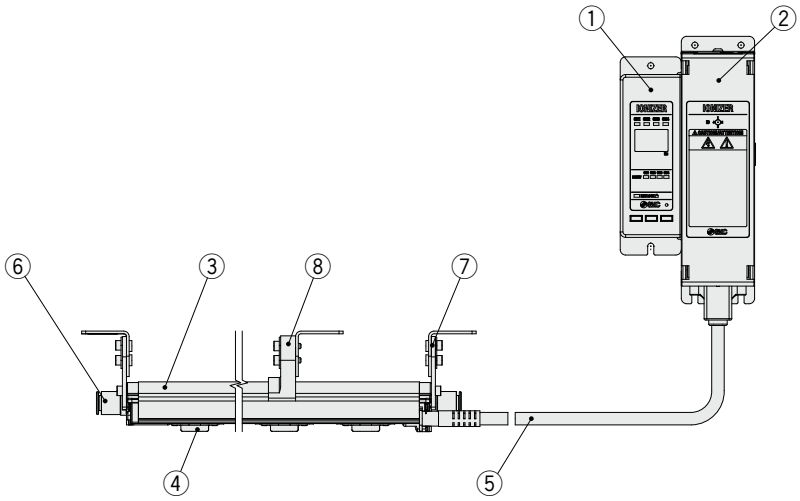

IZT42 series

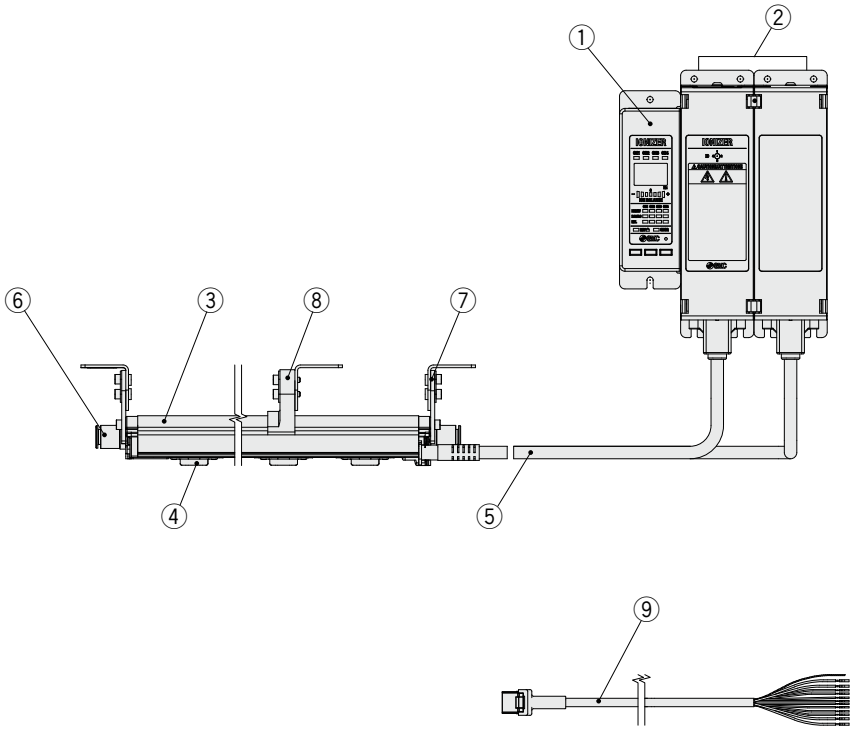

No.	Description
1	**Controller**
2	**High voltage power supply module**
3	**Bar**
4	**Emitter cartridge**
5	**High voltage cable**
6	**One-touch fitting**
7	**End bracket**
8	**Intermediate bracket**
9	**Power supply cable**

Accessories (for Individual Parts)

Emitter cartridge (For IZT40, 41, 42)

IZT40 − N D

Emitter cartridge type/Emitter material

Symbol	Type	Material
D	High speed static neutralization cartridge	Tungsten
E		Silicon
L	Energy saving static neutralization cartridge	Tungsten
M		Silicon

High speed static neutralization

Energy saving static neutralization

Cartridge color	Emitter material
White	Tungsten
Gray	Silicon

IZS40 − N V

Emitter cartridge type/Emitter material

Symbol	Type	Material
V	Energy saving high-efficiency cartridge	Tungsten
S		Silicon

Energy saving high-efficiency

Cartridge color	Emitter material
White	Tungsten
Gray	Silicon

Bar bracket (For IZT40, 41, 42)

IZT40 − B E1

Bar bracket

Symbol	Type
E1	End bracket 1
E2	End bracket 2
M1	Intermediate bracket 1
M2	Intermediate bracket 2

∗ Refer to the table below for selecting a bracket.

Bracket combinations

	Intermediate bracket 1	Intermediate bracket 2
End bracket 1	○ (Adjustment angle ±90°)	×
End bracket 2	×	○ (Adjustment angle ±15°)

○: Available ×: Not available

∗ The number of intermediate brackets required, as listed below, depends on the bar length. Two end brackets are always required regardless of the bar length.

Number of brackets

Bar length	End bracket	Intermediate bracket
160 to 760	2	None
820 to 1600		1
1660 to 2380		2
2440 to 2500		3

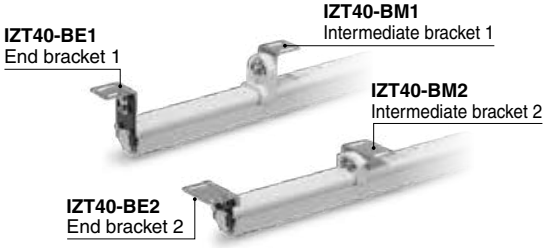

Power supply cable (For IZT40, 41, 42)

IZT40 − CP 3

Power supply cable length

Symbol	Length [m]
3	3
5	5
10	10
15	15

Cable specifications
⇨ page 34

DIN rail mounting bracket for controller and high voltage power supply module

IZT40 − B 1

DIN rail mounting bracket

Symbol	Type
1	For controller
2	For high voltage power supply module IZT40, 41
3	For high voltage power supply module IZT42

For controller

IZT40-B1

For high voltage power supply module

For IZTP40, 41

IZT40-B2

For IZTP42

IZT40-B3

High voltage cable holder (For IZT40, 41, 42)

IZT40 − E 1

High voltage cable holder

Symbol	Type
1	Straight
2	Elbow

Straight

IZT40-E1

Elbow

IZT40-E2

Accessories Sold Separately

Drop prevention cover (For IZT40, 41, 42)

IZS40 − E 2

Number of fixed emitter cartridges

Symbol	Type
2	2 pcs.
3	3 pcs.
4	4 pcs.
5	5 pcs.

Standard bar length

Bar length symbol	Number of required drop prevention covers			
	IZS40-E2	IZS40-E3	IZS40-E4	IZS40-E5
16	1	—	—	—
22	—	1	—	—
34	—	—	—	1
40	—	2	—	—
46	—	1	1	—
58	—	—	1	1
64	—	—	—	2
82	—	1	—	2
112	—	1	—	3
130	—	2	—	3
160	—	2	—	4
190	—	2	—	5
232	—	1	—	7
250	—	2	—	7

∗ Please contact SMC for the non-standard bar length.

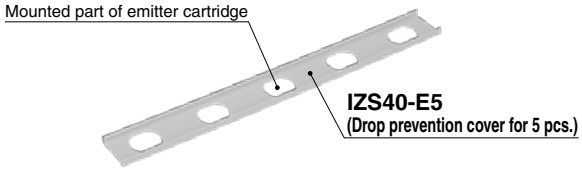

The model number requires the suffix "-X14" to indicate that the body is to be shipped fitted with a drop prevention cover.
⇨ page 21

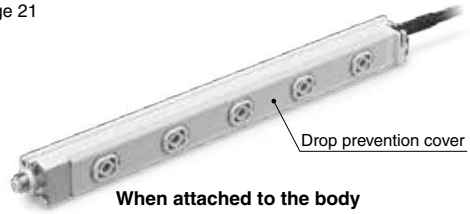

When attached to the body

AC adapter (For IZT40, 41, 42)

IZT40 − CG 1

AC adapter

Symbol	Type
1	With AC cord
2	Without AC cord

∗ AC cord is only for use in Japan. (Rated voltage 125 V, Plug JIS C8303, Inlet IEC60320-C8) External input and output cannot be used when the AC adapter is being used.

AC adapter

Separate cable (For IZT40, 41, 42)

IZT40 − CF 1

Separate cable length

Symbol	Length [m]
1	1
2	2
3	3

Cleaning kit

IZS30 − M2

Connection Circuit: IZT40

Ionizer (IZT40)

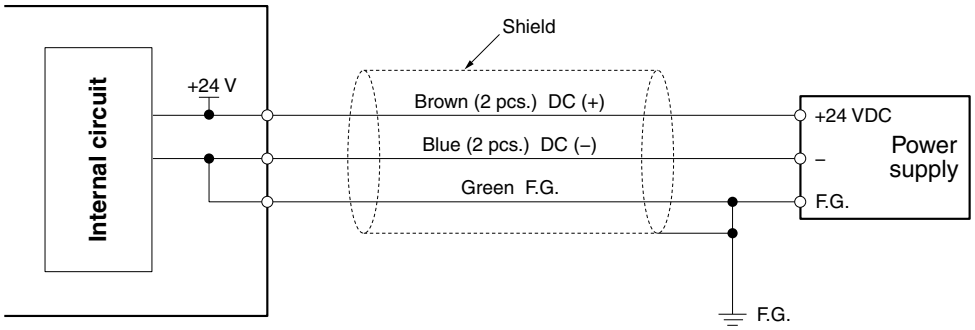

Wiring: IZT40, 41, 42

Wiring

IZT40

Cable color	Signal name	Signal direction	Description
Brown	DC (+)	IN	Connect the power supply to operate the ionizer.
Blue	DC (–)	IN	
Green	F.G.	—	Make sure to ground with 100 Ω or less to use it as a reference electric potential for ionizer.
Pink	—	—	—
Gray	—	—	—
Yellow	—	—	—
Purple	—	—	—
White	—	—	—
Black	—	—	—
Orange	—	—	—

IZT41, 42

Cable color	Signal name	Signal direction	Description
Brown	DC (+)	IN	Connect the power supply to operate the ionizer.
Blue	DC (–)	IN	
Green	F.G.	—	Make sure to ground with 100 Ω or less to use it as a reference electric potential for ionizer.
Pink	Ion generation stop signal CH1	IN	Signal input to turn ON/OFF ion generation of each bar (CH1 to 4). NPN specification: Stops generating ions by connecting to 0 V. (Starts generating ions when disconnected.) PNP specification: Stops generating ions by connecting to +24 VDC. (Starts generating ions when disconnected.)
Gray	Ion generation stop signal CH2	IN	
Yellow	Ion generation stop signal CH3	IN	
Purple	Ion generation stop signal CH4	IN	
White	Maintenance detection signal	OUT (A contact)	Turns ON when emitters need cleaning.
Black	Error signal	OUT (B contact)	Turns OFF in case of power supply failure, high voltage failure, CPU failure, communication failure, cooling fan motor failure, output signal overcurrent, or inconsistent or CH setting duplication or non-connection of high voltage power supply module. (ON when there is no problem.)
Orange	—	—	—

∗ Refer to the power supply cable dimensions on page 34 for the cable specifications.

Frequencies

Series	IZT40	IZT41	IZT42
Controller	IZTC40	IZTC41	
Frequency [Hz]	1	1	0.1
	3	3	0.5
	5	5	1
	8	8	3
	10	10	5
	15	15	8
	20	20	10
	30	30	15
	DC+	DC+	20
	DC–	DC–	30

Wiring Circuit: IZT41, 42

Controller (NPN input/output) for IZT41, 42

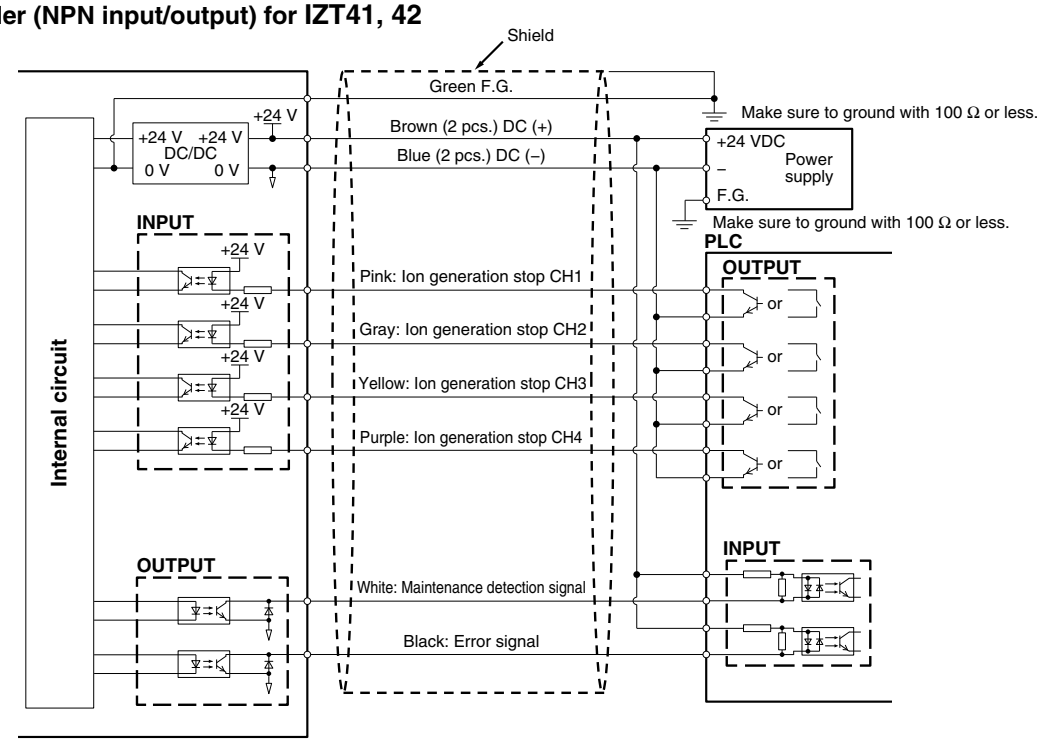

Controller (PNP input/output) for IZT41, 42

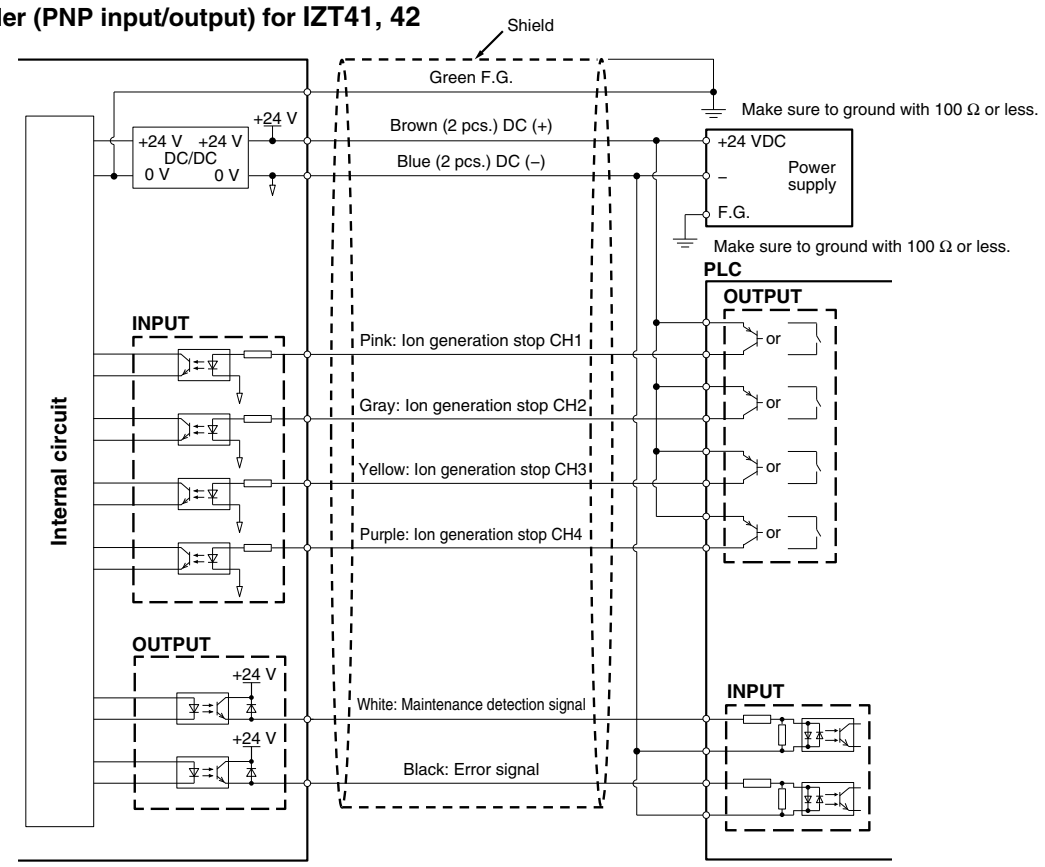

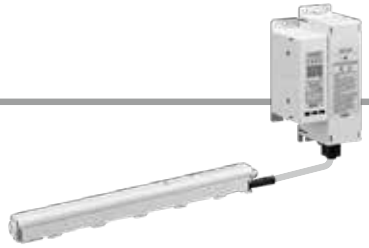

Dimensions

Ionizer IZT40, 41

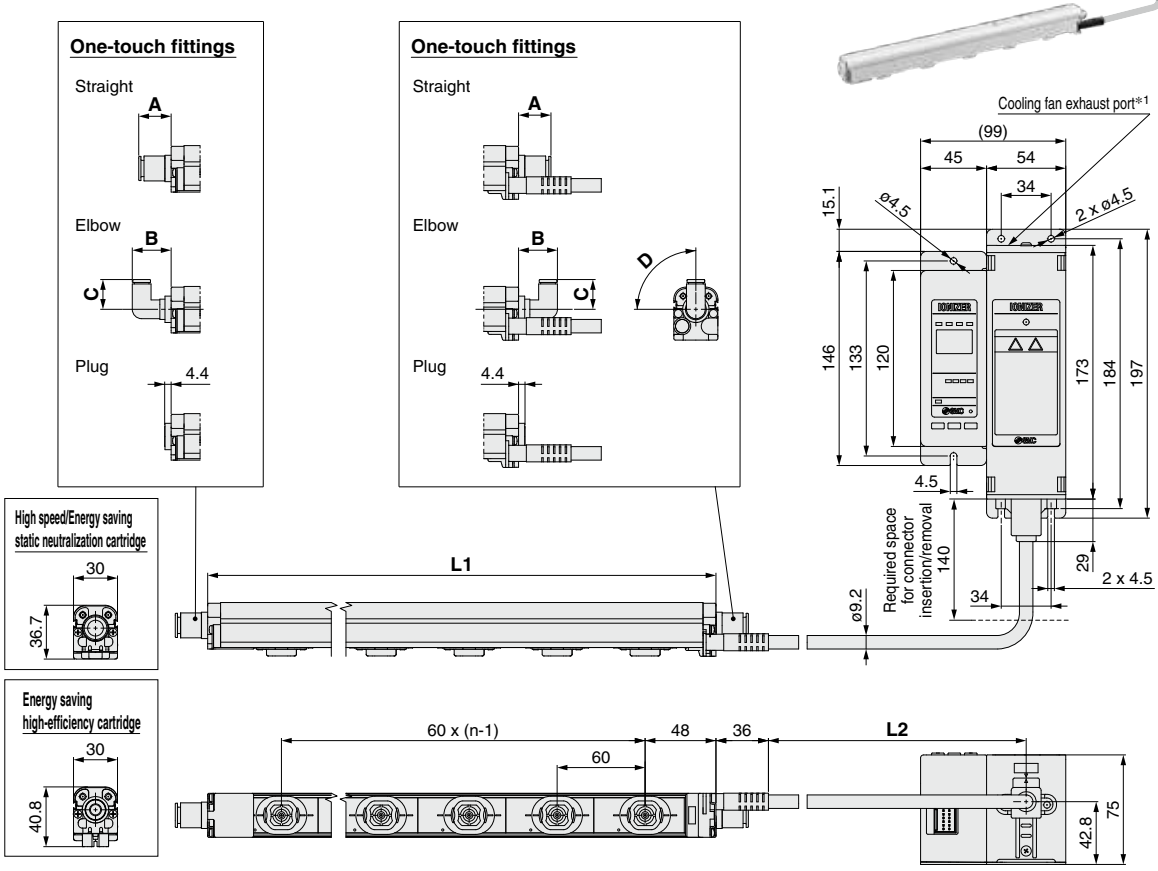

*1 Refer to Mounting (11) in the Specific Product Precautions (page 38).

No. of Emitter Cartridges n, Bar Length L1

Part no.	**n** [pcs.]	**L1** [mm]
IZT□-16	2	160
IZT□-22	3	220
IZT□-34	5	340
IZT□-40	6	400
IZT□-46	7	460
IZT□-58	9	580
IZT□-64	10	640
IZT□-82	13	820
IZT□-112	18	1120
IZT□-130	21	1300
IZT□-160	26	1600
IZT□-190	31	1900
IZT□-232	38	2320
IZT□-250	41	2500

High Voltage Cable Length L2

Symbol	**L2** [mm]
1	1000
2	2000
3	3000

One-touch Fittings

Straight [mm]

	Applicable tubing O.D.	**A**
Metric	ø4	13
	ø6	13
	ø8	15
	ø10	22
Inch	ø3/16"	15
	ø1/4"	14
	ø5/16"	15
	ø3/8"	23

Elbow [mm]

	Applicable tubing O.D.	**B**	**C**	**D**
Metric	ø4	25	19	90°
	ø6	27	21	75°
	ø8	29	24	73°
	ø10	37	27	71°
Inch	ø3/16"	26	20	90°
	ø1/4"	27	21	75°
	ø5/16"	29	24	73°
	ø3/8"	36	27	71°

Dimensions

End bracket IZT40-BE1
Intermediate bracket IZT40-BM1

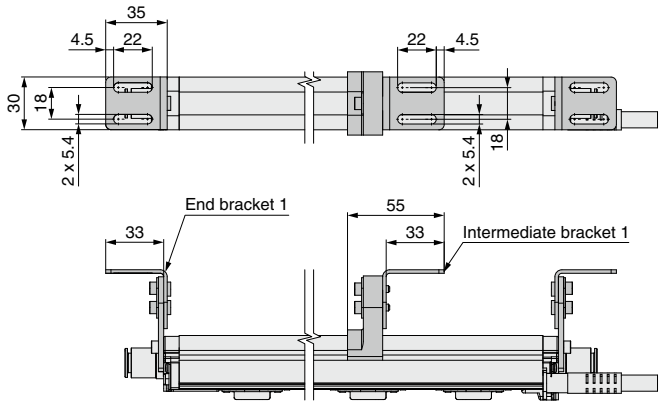

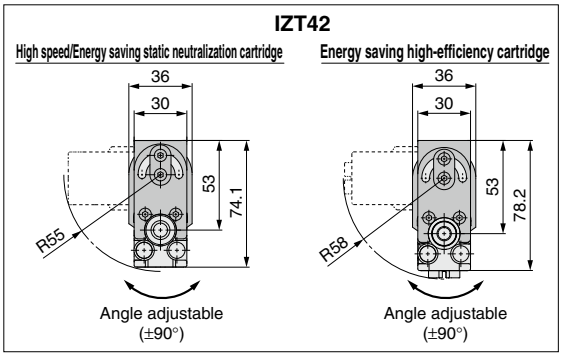

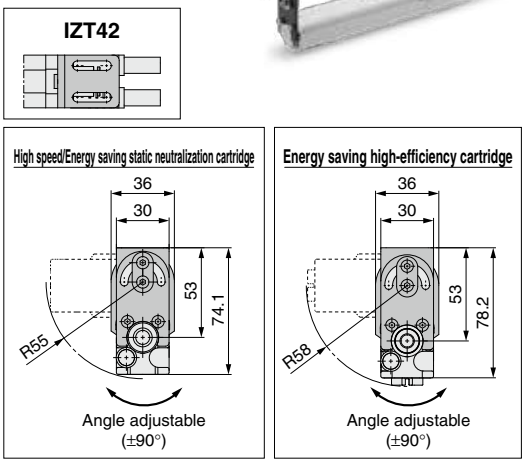

End bracket IZT40-BE2
Intermediate bracket IZT40-BM2

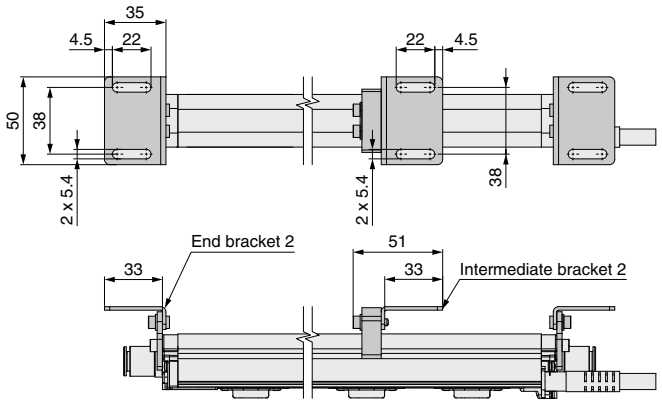

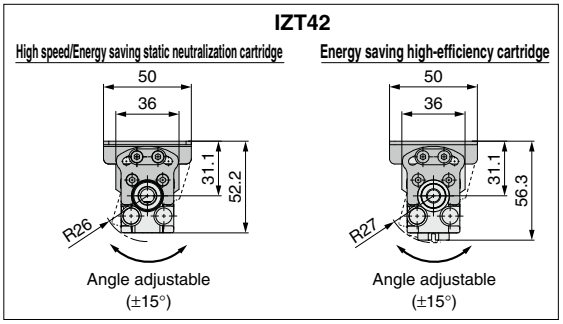

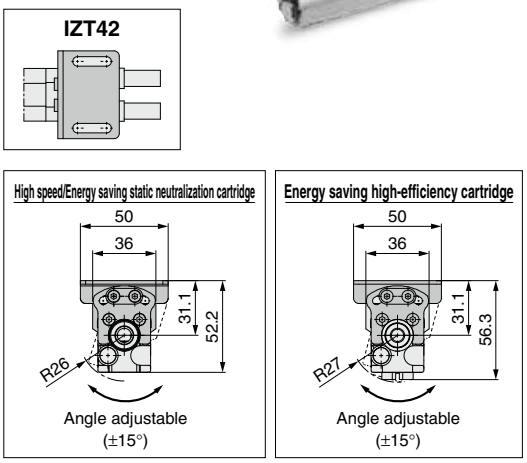

Dimensions

Ionizer IZT42

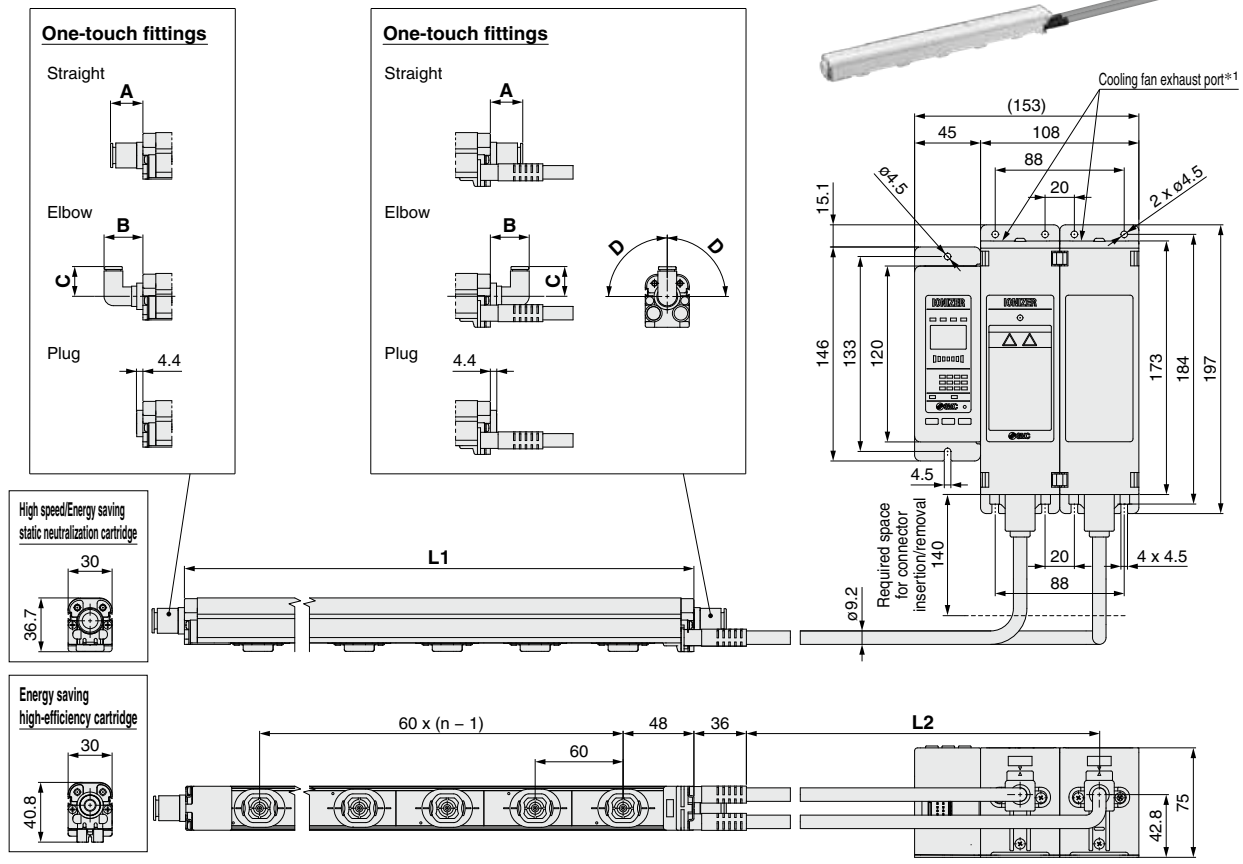

*1 Refer to Mounting (11) in the Specific Product Precautions (page 38).

No. of Emitter Cartridges n, Bar Length L1

Part no.	**n** [pcs.]	**L1** [mm]
IZT□-16	2	160
IZT□-22	3	220
IZT□-34	5	340
IZT□-40	6	400
IZT□-46	7	460
IZT□-58	9	580
IZT□-64	10	640
IZT□-82	13	820
IZT□-112	18	1120
IZT□-130	21	1300
IZT□-160	26	1600
IZT□-190	31	1900
IZT□-232	38	2320
IZT□-250	41	2500

High Voltage Cable Length L2

Symbol	**L2** [mm]
1	1000
2	2000
3	3000

One-touch Fittings

Straight [mm]

	Applicable tubing O.D.	**A**
Metric	ø4	13
	ø6	13
	ø8	15
	ø10	22
Inch	ø3/16"	15
	ø1/4"	14
	ø5/16"	15
	ø3/8"	23

Elbow [mm]

	Applicable tubing O.D.	**B**	**C**	**D**
Metric	ø4	25	19	90°
	ø6	27	21	75°
	ø8	29	24	73°
	ø10	37	27	71°
Inch	ø3/16"	26	20	90°
	ø1/4"	27	21	75°
	ø5/16"	29	24	73°
	ø3/8"	36	27	71°

Dimensions

Controller for IZT40, 41, 42

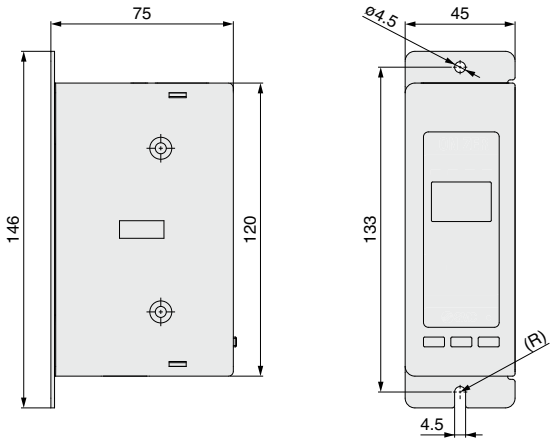

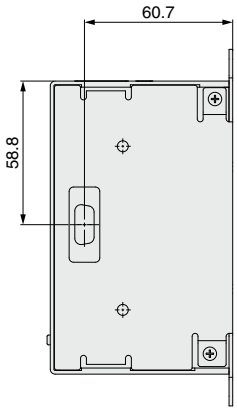

IZT41, 42 IZT40

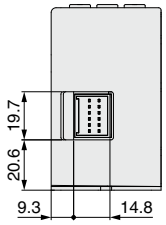

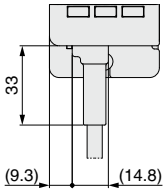

When a power supply cable is inserted

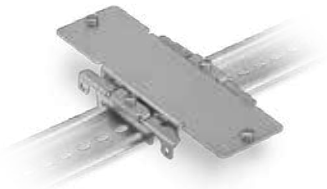

When a DIN rail mounting bracket (IZT40-B1) is used

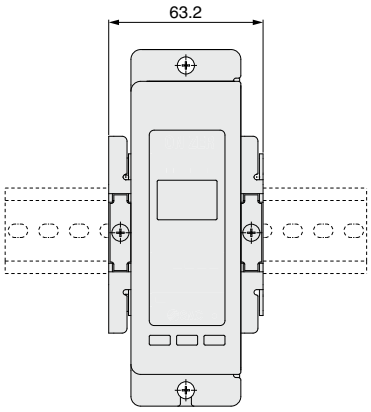

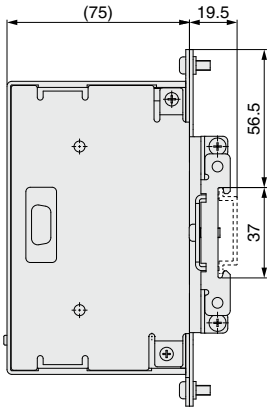

Dimensions

High voltage power supply module for IZT40, 41

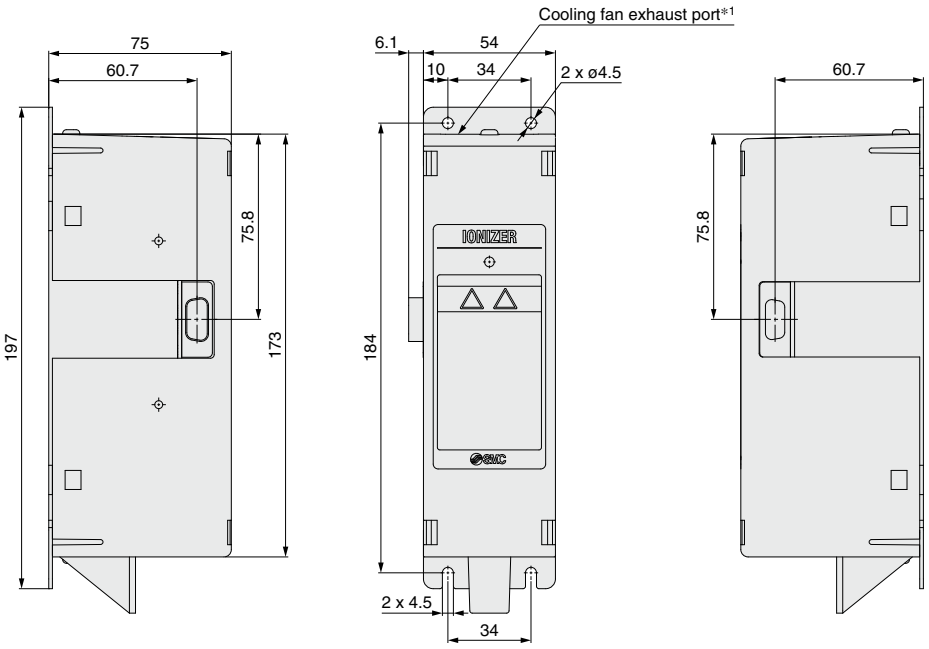

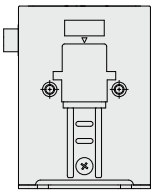

*1 Refer to Mounting (11) in the Specific Product Precautions (page 38).

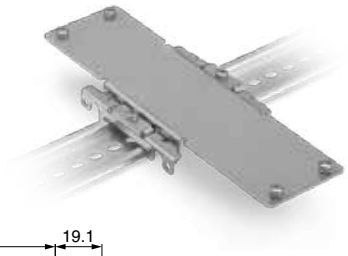

When a DIN rail mounting bracket (IZT40-B2) is used

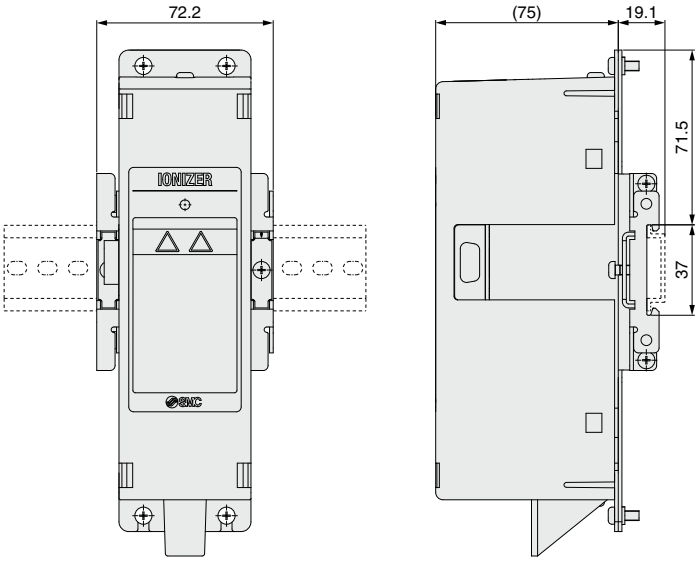

Dimensions

High voltage power supply module for IZT42

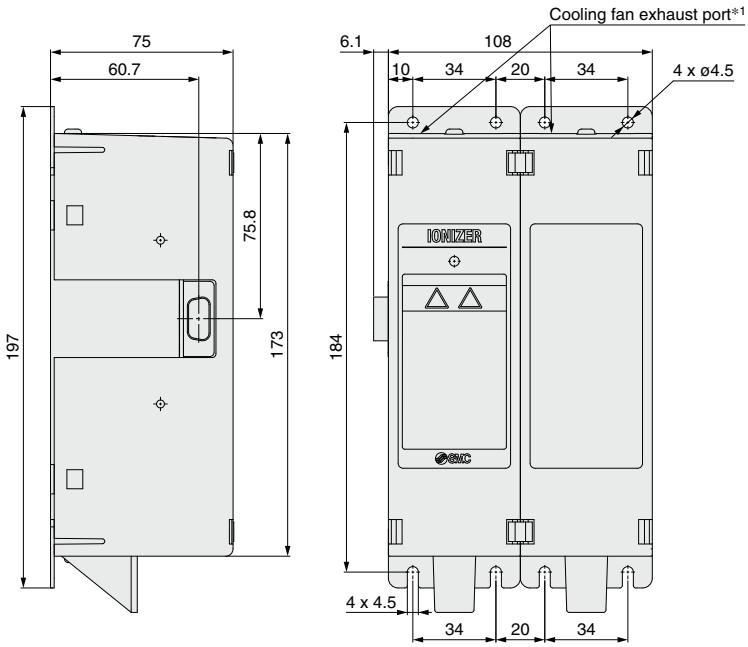

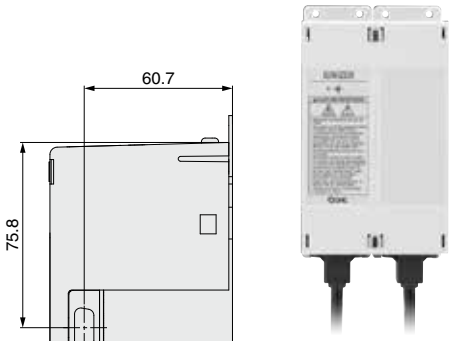

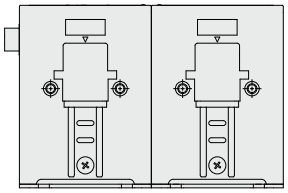

*1 Refer to Mounting (11) in the Specific Product Precautions (page 38).

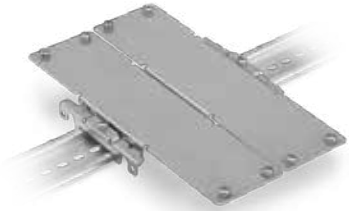

When a DIN rail mounting bracket (IZT40-B3) is used

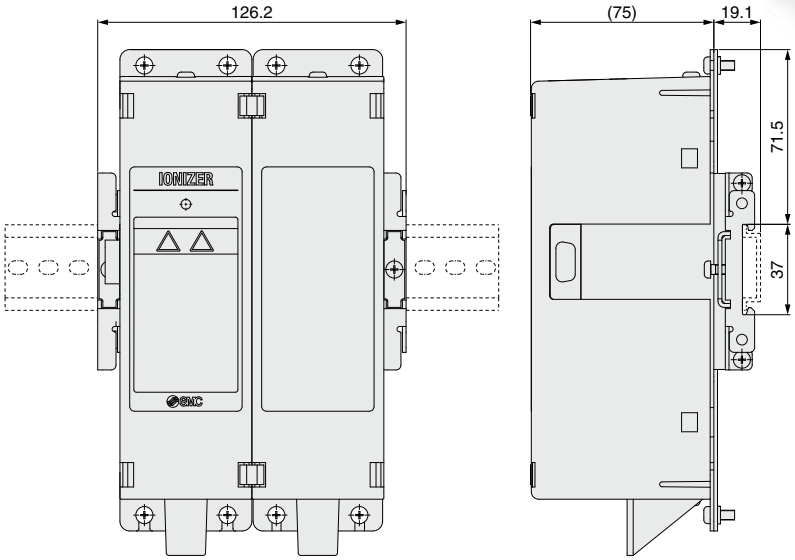

Dimensions

Power supply cable

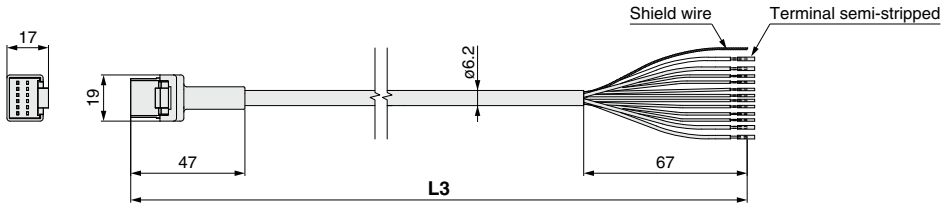

Cable Length L3

Part no.	**L3** [mm]
IZT40-CP3	2950
IZT40-CP5	5000
IZT40-CP10	9800
IZT40-CP15	15000

Cable Specifications

No. of cable wires/Size		12 cores/AWG20 (4 cores), AWG28 (8 cores)
Conductor	Nominal cross section	0.54 mm² (4 cores), 0.09 mm² (8 cores)
	O.D.	0.96 mm (4 cores), 0.38 mm (8 cores)
Insulator	O.D.	1.4 mm Brown, Blue
		0.7 mm White, Green, Pink, Purple, Gray, Yellow, Orange, Black
Sheath	Material	Lead-free PVC
	O.D.	6.2 mm

Separate cable IZT40-CF□

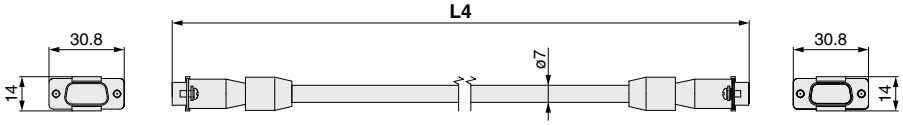

Cable Length L4

Part no.	**L4** [mm]
IZT40-CF1	1000
IZT40-CF2	2000
IZT40-CF3	3000

When a separate cable is used

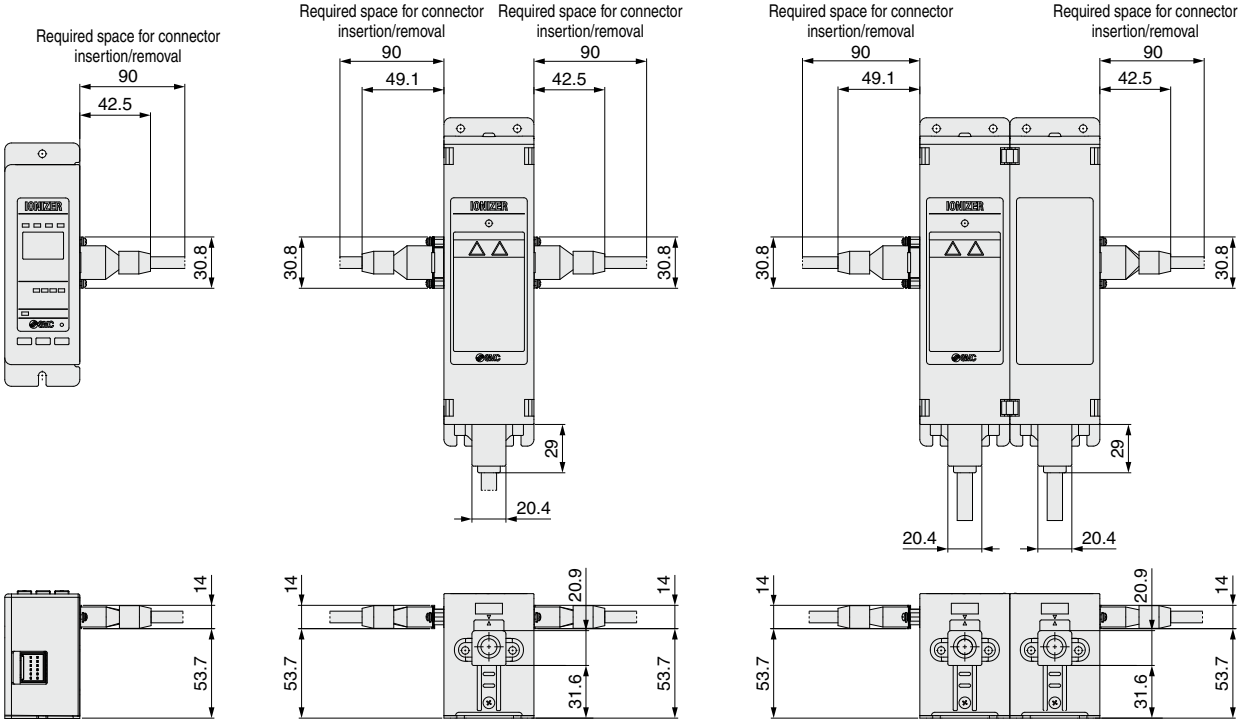

Dimensions

High voltage cable holder

Straight IZT40-E1

Cross-sectional view A-A

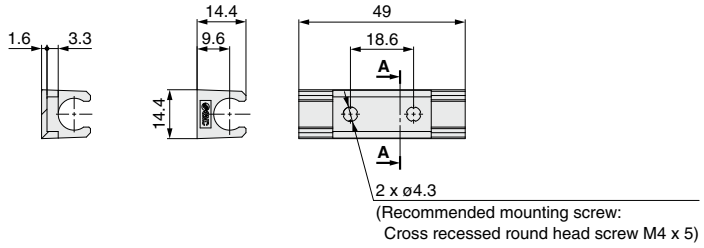

Elbow IZT40-E2

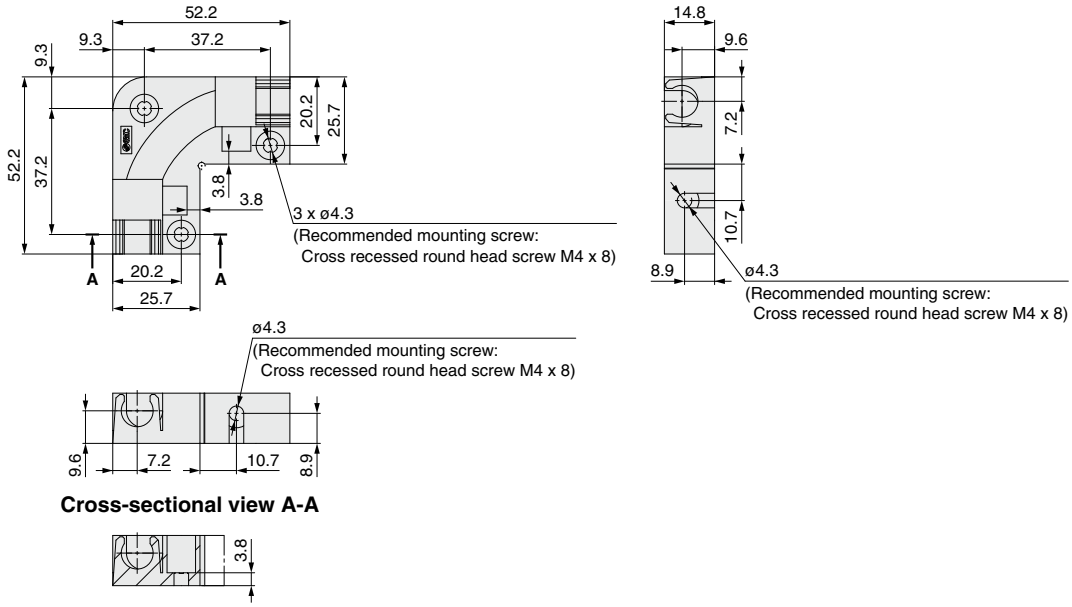

Cross-sectional view A-A

Glossary

1 Discharge Time

Time required for the voltage (attributed to static electric charge) attenuating from an initial value to the arbitrarily selected final value. [JIS C 61340-4-7]
The graph shows the time required for the charged plate voltage being discharged from 1000 V to 100 V.

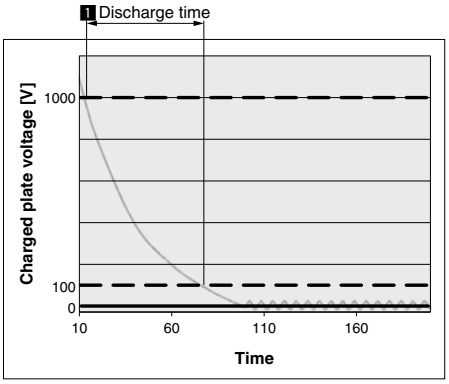

2 Offset Voltage

Voltage which can be measured from the insulated conductive charged plate mounted to the charged plate monitor in the ionized atmosphere. [JIS C 61340-4-7]
This catalog shows the average offset voltage between 1 and 2 minutes after starting the measurement.

3 Peak Offset Voltage

The peak voltage of the pulse voltage type ionizer when considering the offset value of each polarity as an absolute value when the offset voltage fluctuates to the positive and negative side periodically, based on the periodical fluctuation of the ion output from positive to negative. [JIS C 61340-4-7]

4 Potential Amplitude

The p-p voltage value is measured by the charged plate using the AC method in which positive and negative ion output fluctuates periodically. [SMC technical term]
The voltage is measured between 1 and 2 minutes after starting the measurement, and the difference between the maximum and minimum values is indicated.

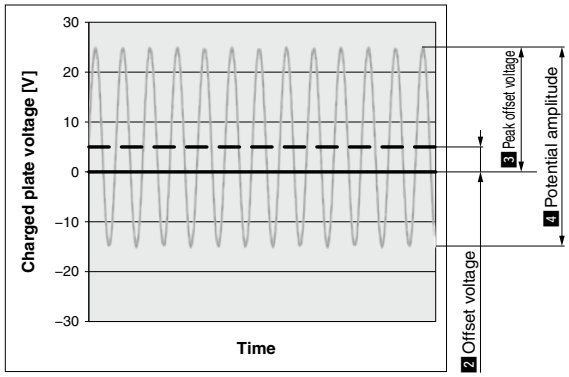

IZT40/41/42 Series
Specific Product Precautions 1

Be sure to read this before handling the products.
Refer to the back cover for safety instructions.

Selection

⚠Warning

1. This product is intended to be used with general factory automation (FA) equipment.
- If considering using the product for other applications (especially those indicated in Warning (4) on the back cover), please consult with SMC beforehand.

2. Use this product within the specified voltage and temperature range.
- Using outside of the specified voltage can cause a malfunction, damage, electrical shock, or fire.

3. Use clean compressed air as fluid. (Compressed air quality of Class 2.4.3., 2.5.3., 2.6.3 or higher according to ISO 8573-1:2010 (JIS B 8392-1:2012) is recommended for operation.)
- This product is not explosion proof. Never use a flammable gas or an explosive gas as a fluid and never use this product in the presence of such gases.
- Please contact us when fluids other than compressed air are used.

4. This product is not explosion-protected.
- Never use this product in locations where the explosion of dust is likely to occur or flammable or explosive gases are used. This can cause a fire.

⚠Caution

1. Clean specification is not available with this product.
- A minute amount of particles are generated due to wearing of the emitters while the product is operating.
- When bringing into a clean room, confirm the required cleanliness before use.

Mounting

⚠Warning

1. Reserve enough space for maintenance, piping, and wiring.
- Please take into consideration that the One-touch fittings for supplying air, need enough space for the air tubing to be easily attached/detached.
- To avoid unreasonable stress applied to the connector and One-touch fitting mounting parts, bending of the cable or air tubing should be more than the minimum bending radius.
- If the cable is bent in an acute angle or load is applied to the cable repeatedly, it may cause a malfunction, wire damage or fire.

[Minimum bending radius] Power supply cable: 40 mm
Separate cable (Option): 40 mm
High voltage cable: 30 mm

∗ Shown above is wiring with the fixed minimum allowable bending radius and at a temperature of 20°C. A bend radius should be larger at a temperature lower than 20°C. Regarding the minimum bending radius of the air tubing, refer to the operation manual or catalog for air tubing.

Mounting

⚠Warning

2. Installation of the high voltage cable
- Use the specified cable holder (IZT40-E1 or IZT40-E2) for installing high voltage cables.
- Follow the instructions below when installing high voltage cables. If these are not followed, the insulation performance of the high voltage cable will decrease, causing failure of the ionizer, which may lead to electrical shock or fire.
  a. Do not cut the cable.
  b. Keep to the minimum bending radius of the cable.
  c. Do not tighten the cable too much with cable ties. Do not deform the cable by placing any object on the cable.
  d. Avoid the problems of cable runaway such as in a cable duct.
  e. Do not twist or damage the cable. If the cable is damaged, it should be replaced.

3. Fix the high voltage cable connector using 2 screws included as an accessory.
- Fix the connector using 2 cross recessed round head screws (M4 x 10 L) with the specified tightening torque. (Refer to the table below.)

4. Mount on a flat surface and do not apply impact load or excessive external force.
- If there are irregularities, cracks or height differences, excessive stress will be applied to the housing or brackets, resulting in damage or other trouble.
- Do not drop or apply a strong shock. Otherwise, damage or an accident can occur.

5. Install the product so that the bar does not have an excessive deflection.
- For a bar length of 820 mm or more, be sure to support the bar at both ends and in the middle by using brackets (IZT40-BM1 or IZT40-BM2). If the bar is held only at the both ends, self-weight of the bar causes deflection, resulting in damage or deformation of the bar.

6. Avoid using in a place where noise (electromagnetic wave surge) is generated.
- If the product is used in an environment where noise is generated, it may lead to a malfunction and deterioration or damage of the internal elements.
- If the presence of noise is suspected, take preventative measures against noise and avoid crossing wires such as power line and high voltage line.

7. Tighten screws with the specified tightening torque.
- If the mounting screws are tightened in excess of the specified torque range, it may damage the screws or mounted areas.
- If the tightening torque is insufficient, the screws may become loose. (Refer to the table below.)

Tightening Torque for Screws

Description	Part no.	Screw	Tightening torque
End bracket	IZT40-BE□	For fixed angle M4 x 8 L	0.72 to 0.76 N·m
		For fixed bar M4 x 8 L	0.51 to 0.55 N·m
Intermediate bracket 1	IZT40-BM1	M4 x 16 L	0.72 to 0.76 N·m
Intermediate bracket 2	IZT40-BM2	M4 x 16 L	0.47 to 0.49 N·m
Controller	IZTC40 IZTC41	M4 x 30 L	0.22 to 0.24 N·m
Separate cable	IZT40-CF□	Spacer	0.40 to 0.60 N·m
		Set screw	0.25 to 0.35 N·m
DIN rail mounting bracket	IZT40-B□	M4 x 6 L	1.30 to 1.50 N·m
Bar (High voltage cable connector)	IZTB4□-□□□□□-□-□	M4 x 10 L	0.49 to 0.53 N·m
Cable holder	IZT40-E□	M4 x 8 L (Recommended length)	0.19 to 0.21 N·m

IZT40/41/42 Series
Specific Product Precautions 2

Be sure to read this before handling the products.
Refer to the back cover for safety instructions.

Mounting

⚠ Warning

8. Do not touch the emitter directly with fingers or metallic tools.
- Do not touch the emitter with your finger. If the needle sticks to your finger, an electrical shock can cause an instantaneous rapid body motion to escape from the shock, causing injury.
- If the emitter or cartridge is damaged with a tool, the specification will not be met and damage and/or an accident may occur.

⚠ Danger High Voltage

The emitter carries a high voltage. If foreign matter is inserted or there is human contact with the emitter, an electrical shock, or an instantaneous body reaction to escape from the shock, can cause injury.

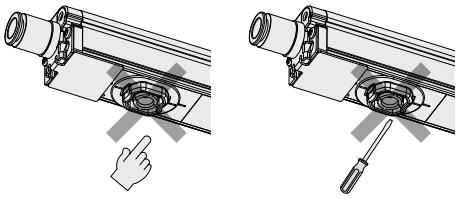

9. Do not affix any tape or seals to the controller, high voltage power supply module, and bar.
- If the tape or label contains a conductive adhesive or reflective paint, a dielectric phenomenon may occur due to ions arising from such substances, resulting in electrostatic charging or electric leakage, causing a malfunction, damage, electric shock or fire.

10. Installation should be conducted after turning off the power supply and air supply to the controller, high voltage power supply module, and bar.
- If installation or adjustment is performed power or air supplied, electric shock, failure or injury can result.

11. The high voltage power supply module uses a fan. A space of 20 mm or more is required from the exhaust port for ventilation. Install the product in a ventilated location so peripheral devices are not affected.

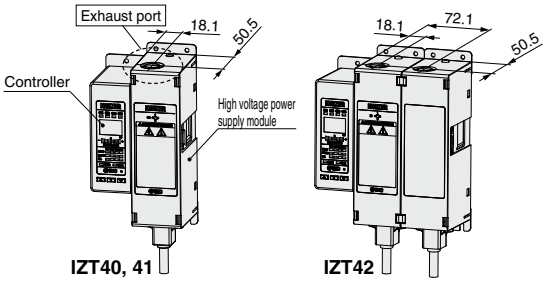

12. Do not apply any excessive force to cables, such as repeated bending, tensioning, or placing a heavy object on the cables.
- It may cause an electric shock, fire, or the breaking of a wire.

13. Do not carry the product by holding its cables.
- It may cause an injury or damage to the product.

⚠ Caution

1. When the IZT4□ series is installed, maintain a space from structures or components.
- If there are electrically conductive objects such as walls or structures close to the bar, generated ions may not reach the target object effectively or product failure or electric shock can result due to dielectric or short-circuit.

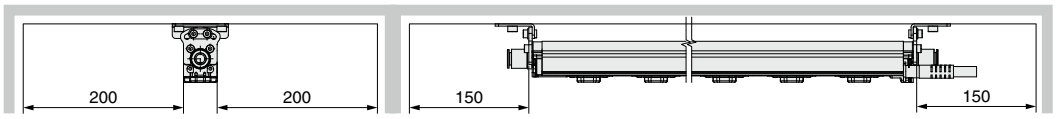

Unit: mm

2. Make sure to confirm the effect of static neutralization after installation.
- The performance of the product varies depending on the surrounding installation and operating conditions. After installation, verify the effects of static neutralization.

3. When installing the IZT41 or IZT42 in proximity with an ionizer which operates in DC mode (one polarity, positive or negative), they should be positioned at least 2 meters away from each other.
- When using the AC mode of the IZT41 or IZT42 near the ionizer in DC mode, keep clearance of at least 2 m between them. The offset voltage (ion balance) may not be adjusted by the built-in sensor due to the ions discharged from the DC mode ionizer.

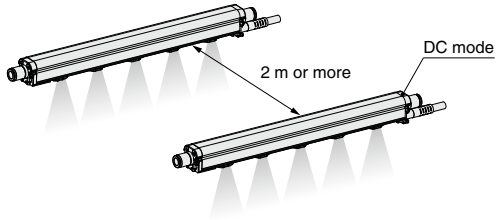

4. Use the specified end bracket.

IZT40/41/42 Series
Specific Product Precautions 3

Be sure to read this before handling the products.
Refer to the back cover for safety instructions.

Wiring / Piping

⚠ Warning

1. **Before wiring, ensure that the power supply capacity is larger than the specification and that the voltage is within the specification. Product damage or malfunction can result.**
2. **To maintain product performance, the power supply shall be UL listed Class 2 certified by National Electric Code (NEC) or evaluated as a limited power source provided by UL60950.**
3. **To maintain the product performance, ground the product with an earth ground cable with a resistance of 100 Ω or less. If the product is not grounded, it is not possible to secure the performance and may lead to product failure or malfunction.**
4. **Wiring (including insertion and removal of the connector) should never be carried out with the power supply ON. Otherwise, an electrical shock or accident may occur.**
5. **Use the specified cable for connecting the ionizer controller, high voltage power supply module, and bar. Do not disassemble or retrofit. Modifying the product may cause accidents such as electric shock, failure or fire. The product will not be guaranteed if it is disassembled and/or modified.**
6. **Ensure the safety of wiring and surrounding conditions before supplying power.**
7. **Do not connect or disconnect the connectors (including power source) while the power is supplied. Failure to follow this procedure may cause product malfunction.**
8. **If the ionizer wiring and high power lines are routed together, this product may malfunction due to noise. Therefore, use a separate wiring route for this product.**
9. **Confirm that the wiring is correct before operation. Incorrect wiring will lead to product damage or malfunction.**
10. **Flush the piping before use. Before piping this product, exercise caution to prevent particles, water drops, or oil contents from entering the piping.**

Operating Environment / Storage Environment

⚠ Warning

1. **Observe the fluid temperature and ambient temperature range.**
   - Fluid temperature and ambient temperature ranges are; 0 to 40°C for controller, 0 to 40°C for high voltage power supply module, 0 to 50°C for bar, and 0 to 40°C for AC adapter.
   - Do not use the product in locations where the temperature may change suddenly even if the ambient temperature range is within the specified limits, resulting in condensation.

Operating Environment / Storage Environment

⚠ Warning

2. **Do not use this product in an enclosed space.**
   - This product utilizes a corona discharge phenomenon. Avoid using in an enclosed space as ozone and nitrogen oxides exist in such places, even though in marginal quantities.
3. **Environments to avoid**
   - Never use or store under the following conditions. These may cause a failure, fire, etc.
     a. Environments where the ambient temperature is outside of the product specification
     b. Environments where the ambient humidity is outside of the product specification
     c. Environments where abrupt temperature changes may cause condensation
     d. Environments where corrosive gas, flammable gas or other volatile flammable substances are stored
     e. Environments where the product may be exposed to conductive powder such as iron powder or dust, oil mist, salt, organic solvent, machining chips, particles or cutting oil (including water and any liquids), etc.
     f. Environments where ventilated air from an air conditioner is directly applied to the product
     g. Enclosed or poorly ventilated environments
     h. Environments that are exposed to direct sunlight or heat radiation
     i. Environments where strong electromagnetic noise is generated, such as strong electrical and magnetic fields or supply voltage spikes
     j. Environments where static electricity is generated
     k. Environments where a strong high frequency occurs
     l. Environments that are subject to potential lightning strikes
     m. Environments where the product may receive direct impact or vibration
     n. Environments where the product may be subjected to forces or weight that could cause physical deformation
4. **Do not use an air containing mist or dust.**
   - The air containing mist or dust will cause the performance to decrease and shorten the maintenance cycle.
   - Install an air dryer (IDF series), air filter (AF/AFF series), and/or mist separator (AFM/AM series) to obtain clean compressed air (compressed air quality of Class 2.4.3., 2.5.3., 2.6.3 or higher according to ISO 8573-1:2010 (JIS B 8392-1:2012) is recommended for operation).
5. **Controller, high voltage power supply module, bar, and AC adapter are not resistant to lightening surge.**
6. **Effects on implantable medical devices**
   - The electromagnetic waves emitted from this product may interfere with implantable medical devices such as cardiac pacemakers and cardioverter defibrillators, resulting in the malfunction of the medical device or other adverse effects.
   - Please use extreme caution when operating equipment which may have an adverse effect on your implantable medical device. Be sure to thoroughly read the precautions stated in the catalog, operation manual, etc., of your implantable medical device, or contact the manufacturer directly for further details on what types of equipment need to be avoided.

IZT40/41/42 Series
Specific Product Precautions 4

Be sure to read this before handling the products.
Refer to the back cover for safety instructions.

Maintenance

⚠ Warning

1. Periodically inspect the ionizer and clean the emitters.
- Check regularly if the product is operating with undetected failures or not.
- The maintenance must be performed by an operator who has sufficient knowledge and experience.
- If the product is used for an extended period with dust present on the emitters, the product performance will be reduced.
- A maintenance detection function is available with the IZT41 and IZT42. When emitter contamination is detected, clean the emitter.
- In cases where the maintenance detection function is not used on the IZT41 or IZT42, or when the IZT40 is used, perform a neutralizing performance test and set a maintenance cycle for periodic cleaning.
- The emitter contamination level is different depending on the installation environment and supply pressure.
- If the performance is not recovered after cleaning, it is possible that emitters are worn. Replace the emitter cartridge.

⚠ Danger High Voltage

This product contains a high voltage generation circuit. When performing maintenance inspection, be sure to confirm that the power supply to the ionizer is turned off. Never disassemble or modify the ionizer, as this may not only impair the product's functionality but could cause an electric shock or electric leakage.

2. When cleaning the emitter or replacing the emitter cartridge, be sure to turn off the power supply or air supply to the controller, high voltage power supply module, and bar.
- Never touch the emitters with the power supplied to the controller, high voltage power supply module, and bar. Electric shock may cause injury.
- If an attempt to replace the emitter cartridges is performed before removing air supply, the emitter cartridges may eject unexpectedly due to presence of the compressed air. Remove supply air before replacing the cartridges.
- If emitter cartridges are not securely mounted to the bar, they may eject or release when air is supplied to the product.
- Securely mount or remove the emitter cartridges referencing the instructions shown below.
- Securely mount or remove the emitter cartridges with hands and do not use tools. (Tightening torque: 0.2 to 0.3 N·m)

Removal of emitter cartridge

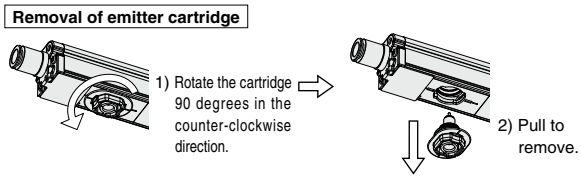

Mounting of emitter cartridge

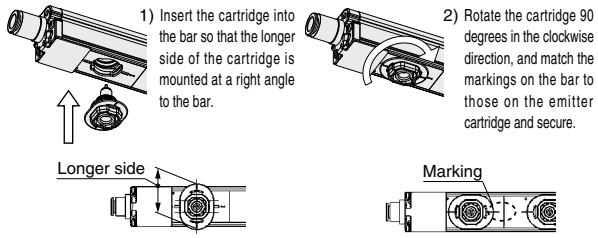

Maintenance

⚠ Warning

3. Do not disassemble or modify the product.
- Disassembling or modifying the product may cause accidents such as electric shock, failure or fire.
- The product will not be guaranteed if it is disassembled and/or modified.

4. Do not operate the product with wet hands.
- Never operate the product with wet hands. It may cause electric shock or other accidents.

Handling

⚠ Caution

1. Do not apply excessive external force or impact (100 m/s² or more).
- Even though the controller, high voltage power supply module, and bar do not appear to be damaged, the internal parts may be damaged and cause a malfunction.

2. If the bar length exceeds 820 mm, hold both ends and the middle of the bar to avoid a moment load being applied.
- Handling the product by holding either end of the bar may cause deformation or damage of the product.

3. The power cable must be connected and disconnected by hand.
- The use of tools can result in damage to the product.
- Hold the connector by hand and pull it out straight.
- If the connector has a lock mechanism, release the lock and then pull out the connector.

4. If smoking, fire, or foul smell occurs in the product, immediately shut off the power supply.

5. Do not touch part A of the high voltage connector by hand. Be careful that moisture or foreign matter does not adhere to the connector.
- Do not touch part A of the high voltage connector while handling.
- Keep the high voltage connector free from contamination. Adhesion of oil or foreign matter on part A may cause high-voltage electric leakage.
- If moisture, oil, or foreign matter adheres to part A, clean it with ethanol.

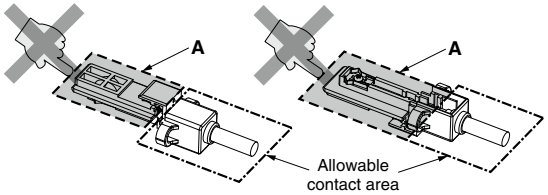

High voltage connector

⚠ Safety Instructions

These safety instructions are intended to prevent hazardous situations and/or equipment damage. These instructions indicate the level of potential hazard with the labels of **"Caution," "Warning"** or **"Danger."** They are all important notes for safety and must be followed in addition to International Standards (ISO/IEC)*1), and other safety regulations.

⚠ Caution: **Caution** indicates a hazard with a low level of risk which, if not avoided, could result in minor or moderate injury.

⚠ Warning: **Warning** indicates a hazard with a medium level of risk which, if not avoided, could result in death or serious injury.

⚠ Danger : **Danger** indicates a hazard with a high level of risk which, if not avoided, will result in death or serious injury.

*1) ISO 4414: Pneumatic fluid power – General rules relating to systems.
ISO 4413: Hydraulic fluid power – General rules relating to systems.
IEC 60204-1: Safety of machinery – Electrical equipment of machines.
(Part 1: General requirements)
ISO 10218-1: Manipulating industrial robots – Safety.
etc.

⚠ Warning

1. The compatibility of the product is the responsibility of the person who designs the equipment or decides its specifications.

Since the product specified here is used under various operating conditions, its compatibility with specific equipment must be decided by the person who designs the equipment or decides its specifications based on necessary analysis and test results. The expected performance and safety assurance of the equipment will be the responsibility of the person who has determined its compatibility with the product. This person should also continuously review all specifications of the product referring to its latest catalog information, with a view to giving due consideration to any possibility of equipment failure when configuring the equipment.

2. Only personnel with appropriate training should operate machinery and equipment.

The product specified here may become unsafe if handled incorrectly. The assembly, operation and maintenance of machines or equipment including our products must be performed by an operator who is appropriately trained and experienced.

3. Do not service or attempt to remove product and machinery/equipment until safety is confirmed.

1. The inspection and maintenance of machinery/equipment should only be performed after measures to prevent falling or runaway of the driven objects have been confirmed.
2. When the product is to be removed, confirm that the safety measures as mentioned above are implemented and the power from any appropriate source is cut, and read and understand the specific product precautions of all relevant products carefully.
3. Before machinery/equipment is restarted, take measures to prevent unexpected operation and malfunction.

4. Contact SMC beforehand and take special consideration of safety measures if the product is to be used in any of the following conditions.

1. Conditions and environments outside of the given specifications, or use outdoors or in a place exposed to direct sunlight.
2. Installation on equipment in conjunction with atomic energy, railways, air navigation, space, shipping, vehicles, military, medical treatment, combustion and recreation, or equipment in contact with food and beverages, emergency stop circuits, clutch and brake circuits in press applications, safety equipment or other applications unsuitable for the standard specifications described in the product catalog.
3. An application which could have negative effects on people, property, or animals requiring special safety analysis.
4. Use in an interlock circuit, which requires the provision of double interlock for possible failure by using a mechanical protective function, and periodical checks to confirm proper operation.

⚠ Caution

1. The product is provided for use in manufacturing industries.

The product herein described is basically provided for peaceful use in manufacturing industries.
If considering using the product in other industries, consult SMC beforehand and exchange specifications or a contract if necessary.
If anything is unclear, contact your nearest sales branch.

Limited warranty and Disclaimer/ Compliance Requirements

The product used is subject to the following "Limited warranty and Disclaimer" and "Compliance Requirements".
Read and accept them before using the product.

Limited warranty and Disclaimer

1. The warranty period of the product is 1 year in service or 1.5 years after the product is delivered, whichever is first.*2)
   Also, the product may have specified durability, running distance or replacement parts. Please consult your nearest sales branch.
2. For any failure or damage reported within the warranty period which is clearly our responsibility, a replacement product or necessary parts will be provided.
   This limited warranty applies only to our product independently, and not to any other damage incurred due to the failure of the product.
3. Prior to using SMC products, please read and understand the warranty terms and disclaimers noted in the specified catalog for the particular products.

***2) Vacuum pads are excluded from this 1 year warranty.**
A vacuum pad is a consumable part, so it is warranted for a year after it is delivered.
Also, even within the warranty period, the wear of a product due to the use of the vacuum pad or failure due to the deterioration of rubber material are not covered by the limited warranty.

Compliance Requirements

1. The use of SMC products with production equipment for the manufacture of weapons of mass destruction (WMD) or any other weapon is strictly prohibited.
2. The exports of SMC products or technology from one country to another are governed by the relevant security laws and regulations of the countries involved in the transaction. Prior to the shipment of a SMC product to another country, assure that all local rules governing that export are known and followed.

⚠ Caution

SMC products are not intended for use as instruments for legal metrology.

Measurement instruments that SMC manufactures or sells have not been qualified by type approval tests relevant to the metrology (measurement) laws of each country. Therefore, SMC products cannot be used for business or certification ordained by the metrology (measurement) laws of each country.

UNIT CONVERSIONS

	unit	conversion	result
length	m	x 3.28	ft
	mm	x 0.04	in
mass	g	x 0.04	oz
volume	cm^3	÷ 16.387	in^3
	L	x 61.024	in^3
speed	mm/s	÷ 25.4	in/s
pressure	MPa	x 145	psi
	kPa	÷ 6.895	psi
temperature	°C	x1.8 then add 32	°F
torque	N·m	x 0.738	ft-lb
force	N	÷ 4.448	lbf
flow	L/min	÷ 28.317	cfm

Global Manufacturing, Distribution and Service Network

Worldwide Subsidiaries

EUROPE

AUSTRIA
SMC Pneumatik GmbH (Austria)

BELGIUM
SMC Pneumatics N.V./S.A.

BULGARIA
SMC Industrial Automation Bulgaria EOOD

CROATIA
SMC Industrijska Automatika d.o.o.

CZECH REPUBLIC
SMC Industrial Automation CZ s.r.o.

DENMARK
SMC Pneumatik A/S

ESTONIA
SMC Pneumatics Estonia

FINLAND
SMC Pneumatics Finland OY

FRANCE
SMC Pneumatique S.A.

GERMANY
SMC Pneumatik GmbH

GREECE
SMC Hellas EPE

HUNGARY
SMC Hungary Ipari Automatizálási Kft.

IRELAND
SMC Pneumatics (Ireland) Ltd.

ITALY
SMC Italia S.p.A.

KAZAKHSTAN
LLP "SMC Kazakhstan"

LATVIA
SMC Pneumatics Latvia SIA

LITHUANIA
UAB "SMC Pneumatics"

NETHERLANDS
SMC Pneumatics B.V.

NORWAY
SMC Pneumatics Norway AS

POLAND
SMC Industrial Automation Polska Sp. z o.o.

ROMANIA
SMC Romania S.r.l.

RUSSIA
SMC Pneumatik LLC.

SLOVAKIA
SMC Priemyselná Automatizácia, Spol s.r.o.

SLOVENIA
SMC Industrijska Avtomatika d.o.o.

SPAIN / PORTUGAL
SMC España, S.A.

SWEDEN
SMC Pneumatics Sweden AB

SWITZERLAND
SMC Pneumatik AG

TURKEY
SMC Pnömatik Sanayi Ticaret ve Servis A.Ş.

UK
SMC Pneumatics (U.K.) Ltd.

ASIA / OCEANIA

AUSTRALIA
SMC Pneumatics (Australia) Pty. Ltd.

CHINA
SMC (China) Co., Ltd.
SMC Pneumatics (Guangzhou) Ltd.

HONG KONG
SMC Pneumatics (Hong kong) Ltd.

INDIA
SMC Pneumatics (India) Pvt. Ltd.

INDONESIA
PT. SMC Pneumatics Indonesia

JAPAN
SMC Corporation

MALAYSIA
SMC Pneumatics (S.E.A.) Sdn. Bhd.

NEW ZEALAND
SMC Pneumatics (N.Z.) Ltd.

PHILIPPINES
Shoketsu SMC Corporation

SINGAPORE
SMC Pneumatics (S.E.A.) Pte. Ltd.

SOUTH KOREA
SMC Pneumatics Korea Co., Ltd.

TAIWAN
SMC Pneumatics (Taiwan) Co., Ltd.

THAILAND
SMC (Thailand) Ltd.

UNITED ARAB EMIRATES
SMC Pneumatics Middle East FZE

VIETNAM
SMC Pneumatics (VN) Co., Ltd

AFRICA

SOUTH AFRICA
SMC Pneumatics (South Africa) Pty Ltd

NORTH, CENTRAL & SOUTH AMERICA

ARGENTINA
SMC Argentina S.A.

BOLIVIA
SMC Pneumatics Bolivia S.R.L.

BRAZIL
SMC Pneumáticos do Brasil Ltda.

CANADA
SMC Pneumatics (Canada) Ltd.

CHILE
SMC Pneumatics (Chile) S.A.

COLOMBIA
SMC Colombia Sucursal de SMC Chile, S.A.

MEXICO
SMC Corporation (Mexico) S.A. de C.V.

PERU
SMC Corporation Peru S.A.C.

USA
SMC Corporation of America

VENEZUELA
SMC Neumatica Venezuela S.A.

U.S. & Canadian Sales Offices

WEST
- Austin
- Dallas
- Los Angeles
- Phoenix
- Portland
- San Jose

CENTRAL
- Chicago
- Cincinnati
- Cleveland
- Detroit
- Des Moines
- Grand Rapids
- Indianapolis
- Kansas City
- Milwaukee
- Minneapolis
- St. Louis

EAST
- Albany
- Atlanta
- Birmingham
- Boston
- Charlotte
- Knoxville
- Nashville
- New Jersey
- Rochester
- Tampa

CANADA
- Vancouver
- Toronto
- Windsor
- Montreal