Pulse Valve

Valve for Dust Collector

RoHS

Air

Life: 10 million cycles*1 or more/ 10 times*2 or more

High peak pressure and low air consumption

Peak pressure 15%*3 increase

Air consumption 35%*3 reduction

*1 Based on SMC's specific testing conditions (JSXFA-06, Pilot valve orifice is ø5 mm or larger)
*2 Compared with existing SMC model

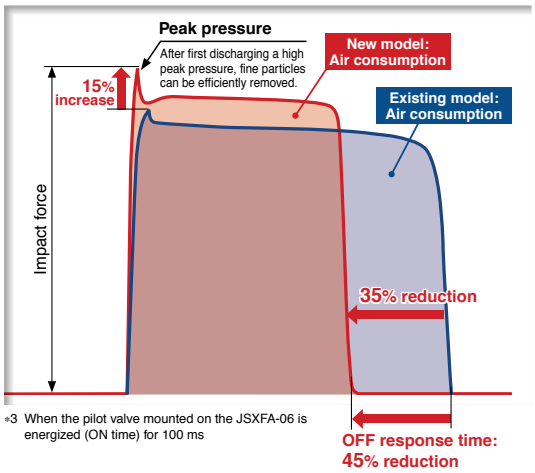

*3 When the pilot valve mounted on the JSXFA-06 is energized (ON time) for 100 ms

New

Immersion type

* The tank should be provided by the customer.

New

ATEX Compliant

55-JSXFA Series

p. 13

Variations

Piping	Port size	Orifice diameter [mm]	Thread type	Pilot port size	With/without silencer (Option)
Compression fitting type Direct piping type (Rc, NPT, G)	3/4 (20A)	ø32	Rc NPT G	1/8 1/4	Without
	1 (25A)	ø40			Without
	1 1/2 (40A)	ø50			With
Immersion type	1 (25A)	ø40			Without

JSXFA Series

Long service life: 10 million cycles*1 or more

A spring is not necessary due to the high-strength elastomer diaphragm.

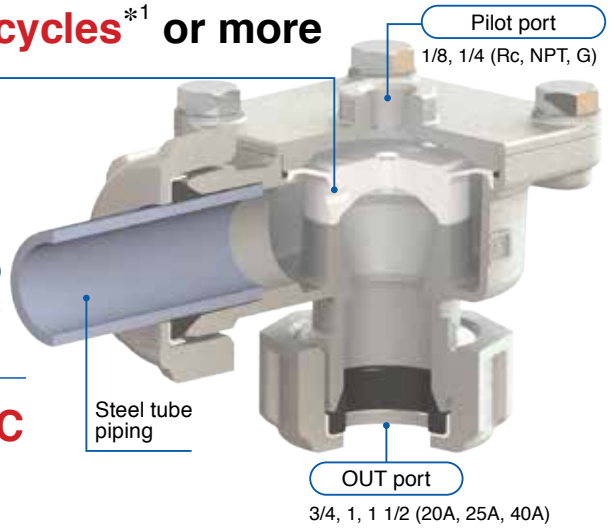

OFF response time: 45%*1, 2 reduction

Fluid temperature: –40 to 60°C

Can be used in a wide range of temperatures

Easier maintenance

The springless diaphragm allows for easy maintenance of the valve. A main valve and sub-valve (for 40A) are included in the maintenance kit.

Flow rate characteristics: 40%*1, 2 increase

Optimal design for the internal geometry

No need to weld the tank piping

Immersion type

* The tank should be provided by the customer.

*1 Based on SMC's specific testing conditions (JSXFA-06, Pilot valve orifice of ø5 mm or larger, Excludes made-to-order option "A")

*2 Compared with the existing SMC model

Compression fitting type
JSXFAE Series

3/4 (20A), 1 (25A), 1 1/2 (40A)

Direct piping type
JSXFAF Series

3/4 (20A), 1 (25A), 1 1/2 (40A)

Immersion type
JSXFAH Series

* The tank should be provided by the customer.

1 (25A)

Dedicated Controller for Operation *VXFC Series* p. 14

The valve controller can turn the many valves for the dust controller ON/OFF.

Power supply voltage	85 to 240 VAC 12 VDC, 24 to 48 VDC	Number of output points	6 output points, 10 output points

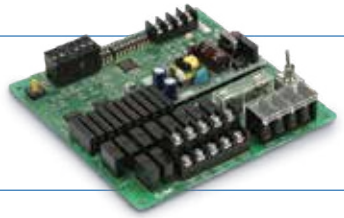

Pulse valve application examples

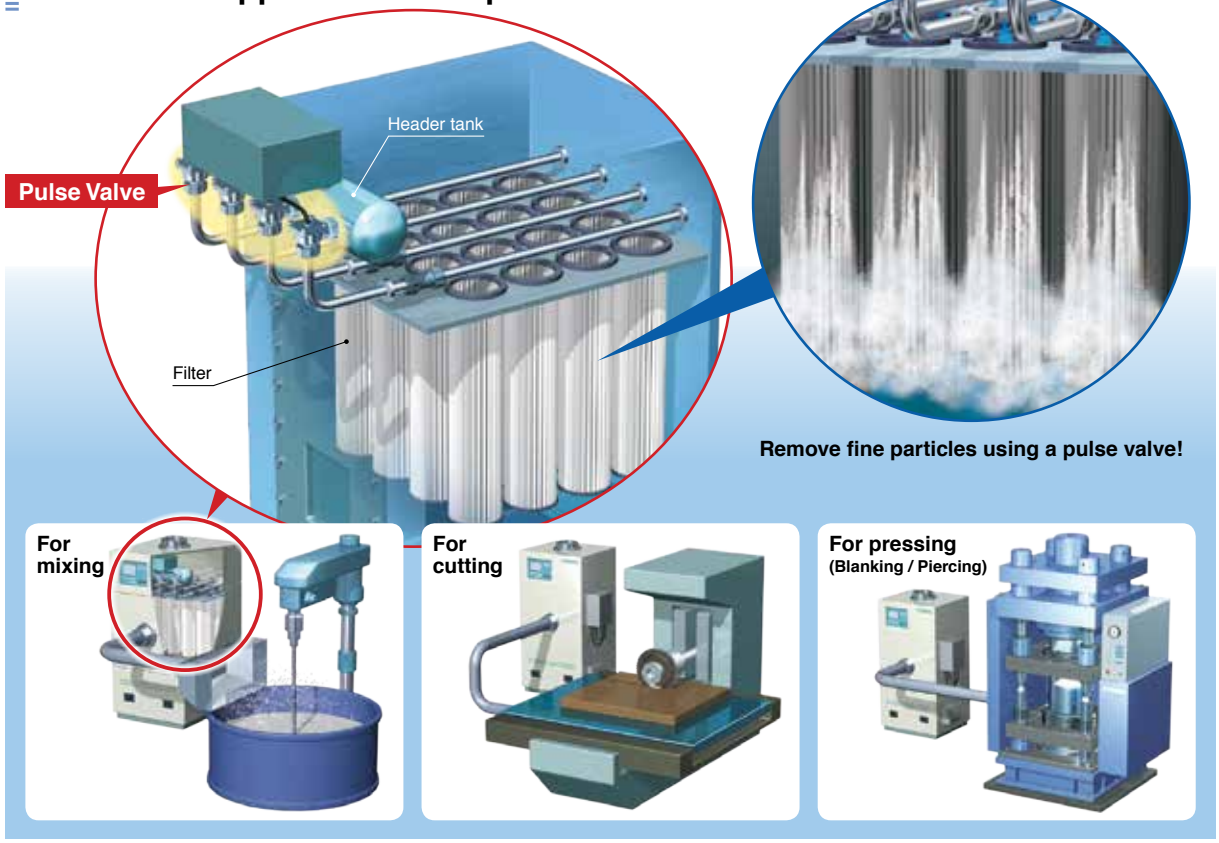

Pulse blow can be used in various industries!

RoHS

How to Order

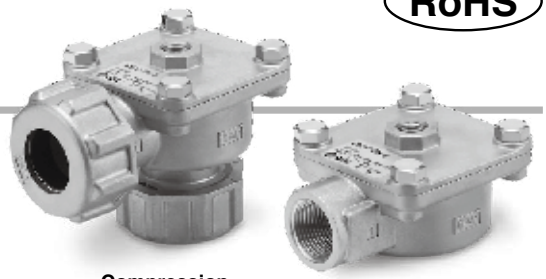

Compression fitting type

Direct piping type

JSXFA E – 06 R – B – □ 1

① ② ③ ④ ⑤ ⑥

① Piping

E	Compression fitting type*1
F	Direct piping type

*1 Seals and washers are included.

② IN/OUT port size

06	3/4 (20A)
10	1 (25A)
14	1 1/2 (40A)

③ Thread type

R	Rc
N	NPT
F	G

④ Fluid and ambient temperatures

B	–40 to 60°C

⑤ With/without silencer

		Port size		
		06	10	14
Nil	Without	●	●	●
S	With	—	—	●

* Port size: 14 only
Select Nil for 06 and 10.

⑥ Pilot port size

Nil	1/4
1	1/8

Symbol

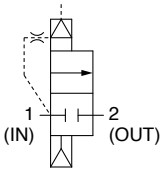

⚠Caution

Selection of Pilot Valve (JSXFAE/F/H common)

For the pilot valve orifice diameter, ø5 mm or larger is recommended.

When the pilot orifice diameter is ø3 mm or larger and less than ø5 mm, put "**A**" to the end of the product number for made-to-order. The product may not operate correctly if the pilot valve orifice diameter is inadequate. (port size: 3/4, 1)
Depending on the pilot piping port size*1 or length, the valve may not operate correctly.

*1 The I.D. of the pilot piping must be larger than the pilot valve orifice diameter to use. The maximum pilot piping I.D. is 10 mm.

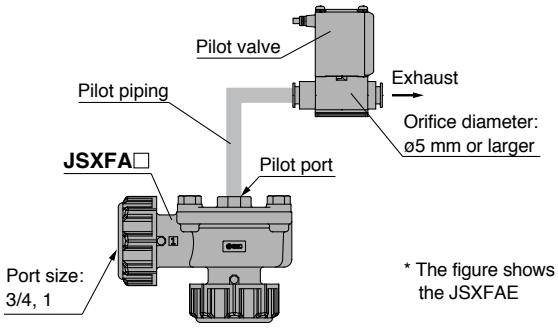

* The figure shows the JSXFAE

Made to Order

Pilot valve orifice diameter: Special specification

A	For ø3 mm to ø5 mm	Port size: 06, 10

JSXFA □ - □ □ - B - □ □ A

Enter the standard product number.

Specifications

Series		JSXFA		
		06	10	14
Orifice diameter [mm]		ø32	ø40	ø50
Port size		3/4	1	1/21
Fluid		Air		
Min. operating pressure differential		14.5 psi (0.1 MPa)		
Max. operating pressure differential		130.53 psi (0.9 MPa)		
Max. system pressure		130.53 psi (0.9 MPa)		
Fluid temperature		-40*1 to 140°F (-40 to 60°C)		
Ambient temperature		-40 to 140°F (-40 to 60°C)		
Weight	**Compression fitting type**	16.58oz (470g)	32.10oz (910g)	65.26oz (1850g)
	Direct piping type	10.23oz (290g)	17.64oz (500g)	43.39oz (1230g)

*1 No condensation allowed

RoHS


Immersion type

How to Order

JSXFA H 6 – 10 R □ – B – □

① ② ③ ④ ⑤ ⑥ ⑦

① Piping

H	Immersion type

② Tank size

6	6 inch

③ IN/OUT port size

10	1 (25A)

④ Thread type

Nil	None
R	Rc
N	NPT
F	G

⑤ Outlet pipe dimensions and thread type (p. 9)

Symbol	1	2	3	4
Pipe projection	Short	Long	Short	Long
Thread type	None	None	G1"	G1"
Pipe thread (Pipe for the OUT port)	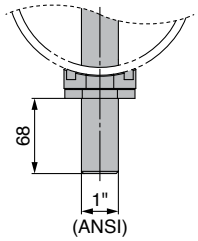	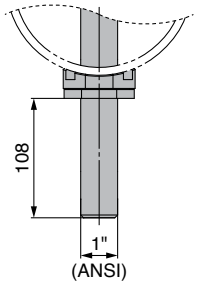	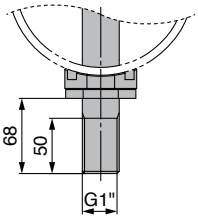	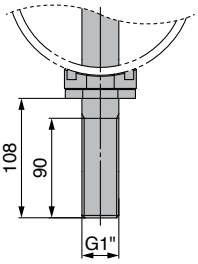

⑥ Fluid and ambient temperatures

B	–40 to 60°C

⑦ Pilot port size

Nil	1/4
1	1/8

Symbol

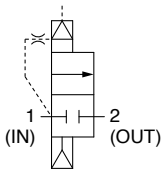

Made to Order

Pilot valve orifice diameter: Special specification

A	For ø3 mm to ø5 mm	Port size: 10

JSXFAH6 – 10 □ □ – B – □ A

Enter the standard product number.

Specifications

Series		JSXFAH 10
Orifice diameter [mm]		ø40
Port size		1
Fluid		Air
Min. operating pressure differential [MPa]		0.1
Max. operating pressure differential [MPa]		0.9
Max. system pressure [MPa]		0.9
Fluid temperature [°C]		–40*1 to 60
Ambient temperature [°C]		–40 to 60
Weight [g]	Immersion type	1670 (Excluding the tank)

*1 No condensation

Construction

JSXFAE/Compression Fitting Type

Port size: 06, 10 sizes

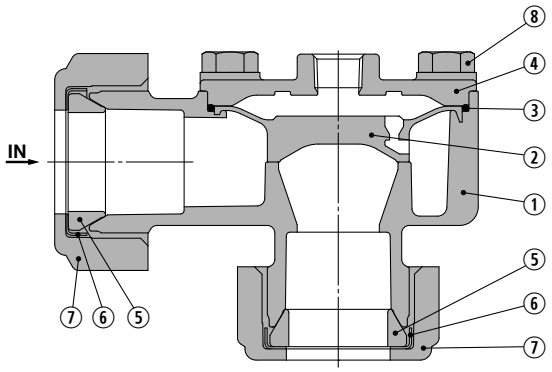

Component Parts

No.	Description	Material
1	**Body**	ADC
2	**Main valve**	Resin
3	**O-ring**	NBR
4	**Bonnet**	ADC
5	**Seal**	NBR
6	**Washer**	Fe (Chromated)
7	**Compression nut**	ADC
8	**Hexagon bolt**	Stainless steel

Port size: 14 size

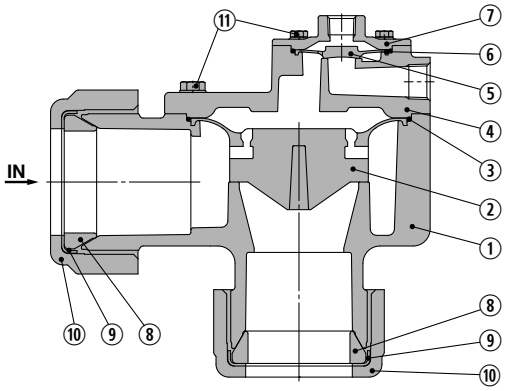

Component Parts

No.	Description	Material
1	**Body**	ADC
2	**Main valve**	Resin
3	**O-ring**	NBR
4	**Bonnet**	ADC
5	**Sub-valve**	Resin
6	**O-ring**	NBR
7	**Bonnet**	ADC
8	**Seal**	NBR
9	**Washer**	Fe (Chromated)
10	**Compression nut**	ADC
11	**Hexagon bolt**	Stainless steel

JSXFAF/Direct Piping Type

Port size: 06, 10 sizes

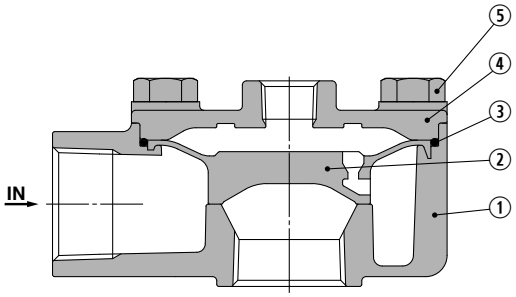

Component Parts

No.	Description	Material
1	**Body**	ADC
2	**Main valve**	Resin
3	**O-ring**	NBR
4	**Bonnet**	ADC
5	**Hexagon bolt**	Stainless steel

Port size: 14 size

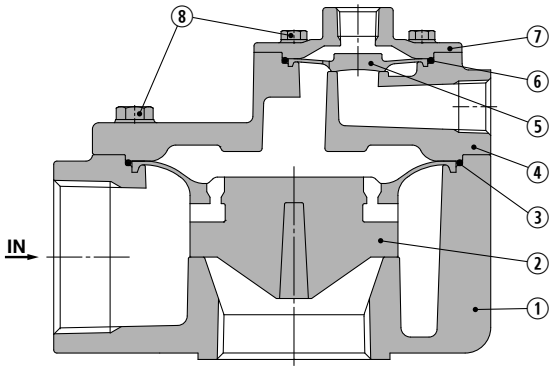

Component Parts

No.	Description	Material
1	**Body**	ADC
2	**Main valve**	Resin
3	**O-ring**	NBR
4	**Bonnet**	ADC
5	**Sub-valve**	Resin
6	**O-ring**	NBR
7	**Bonnet**	ADC
8	**Hexagon bolt**	Stainless steel

Construction

JSXFAH6-10□□-B-□□□/Immersion type

Port size: Size 10

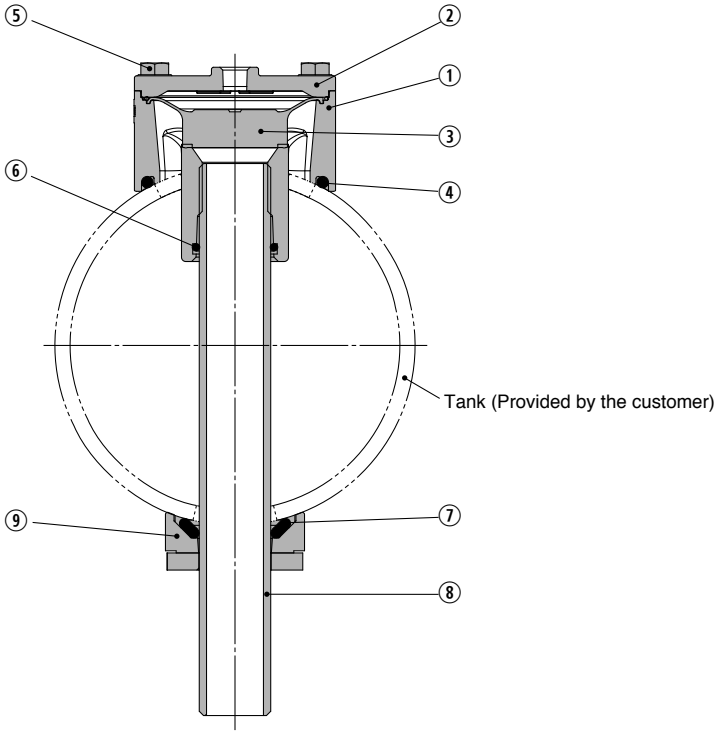

Component Parts

No.	Description	Material	Surface treatment
1	**Body**	ADC12	Trivalent chromated
2	**Bonnet**	ADC12	Trivalent chromated
3	**Main valve**	Resin	—
4	**O-ring 1**	NBR	—
5	**Hexagon bolt**	Stainless steel 304	—
6	**O-ring 2**	NBR	—
7	**Gasket**	NBR	—
8	**Outlet pipe assembly**	STKM + SS400	Painted
9	**Support**	ADC12	Trivalent chromated

Dimensions: JSXFAE/Compression Fitting Type

Port size: 06, 10 sizes

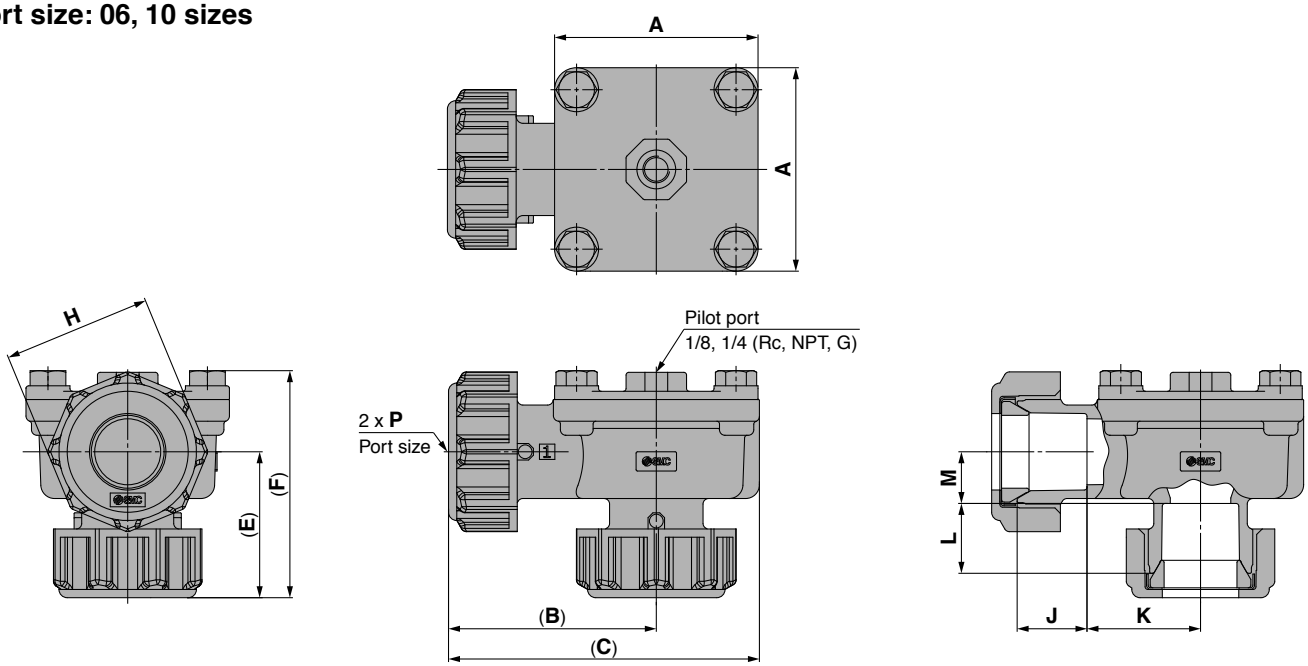

Port size: 14 size

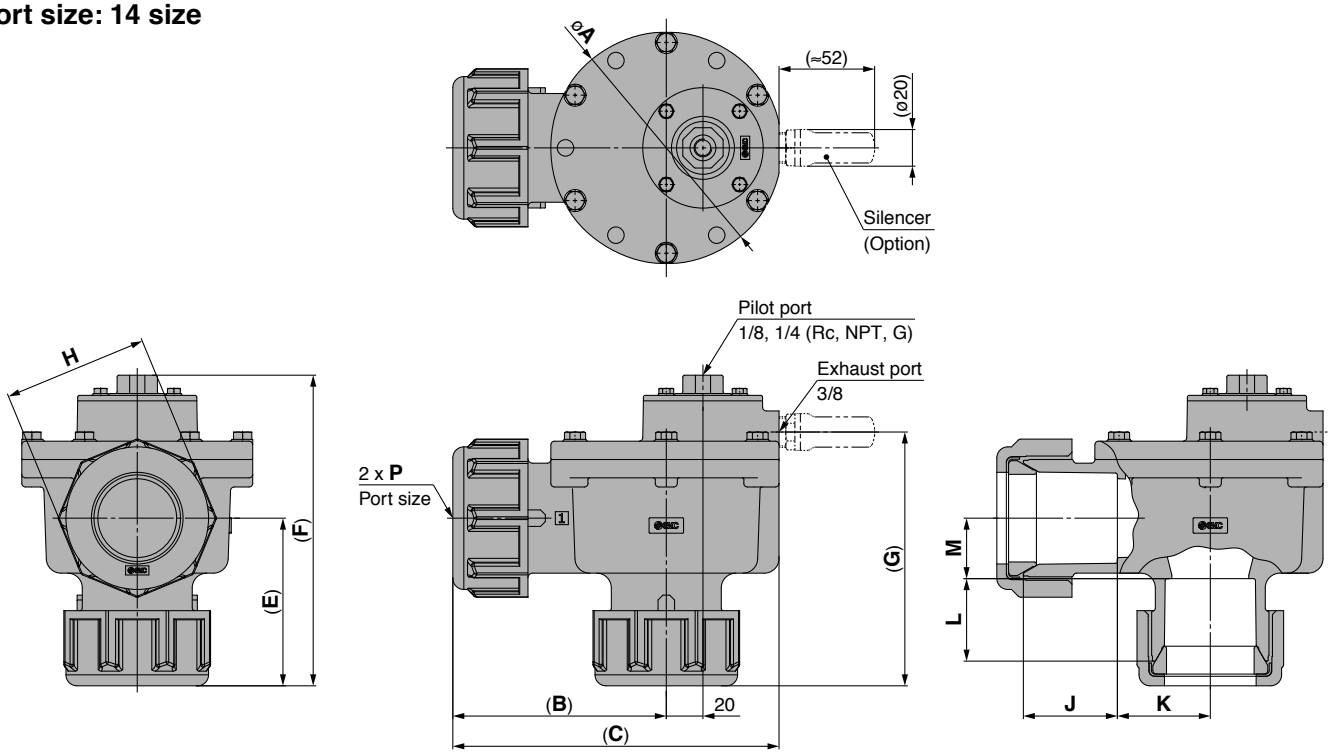

Dimension in [ ] shows the dimension after tightening.

Dimensions

(mm)

Model	Port size P	A	[B]	[C]	[E]	[F]	[G]	H	J	K	L	M
JSXFAE-06	3/4"	2.91" (74)	2.99" (76)	4.45" (113)	2.12" (54)	3.27" (83)	-	2.12" (54)	1" (25.4)	1.62" (41.3)	1" (25.4)	0.74" (18.8)
JSXFAE-10	1"	3.70" (94)	3.54" (90)	5.39" (137)	3.23" (82)	4.72" (120)	-	2.56" (65)	1.31" (33.3)	1.75" (44.4)	1.5" (38.1)	1.24" (31.6)
JSXFAE-14	1 1/2"	4.96" (126)	4.61" (117)	7.01" (178)	3.62" (92)	6.69" (170)	5.47" (139)	3.15" (80)	2.02" (51.3)	1.99" (50.7)	1.77" (45)	1.30" (33)

Dimensions: JSXFAF/Direct Piping Type

Port size: 06, 10 sizes

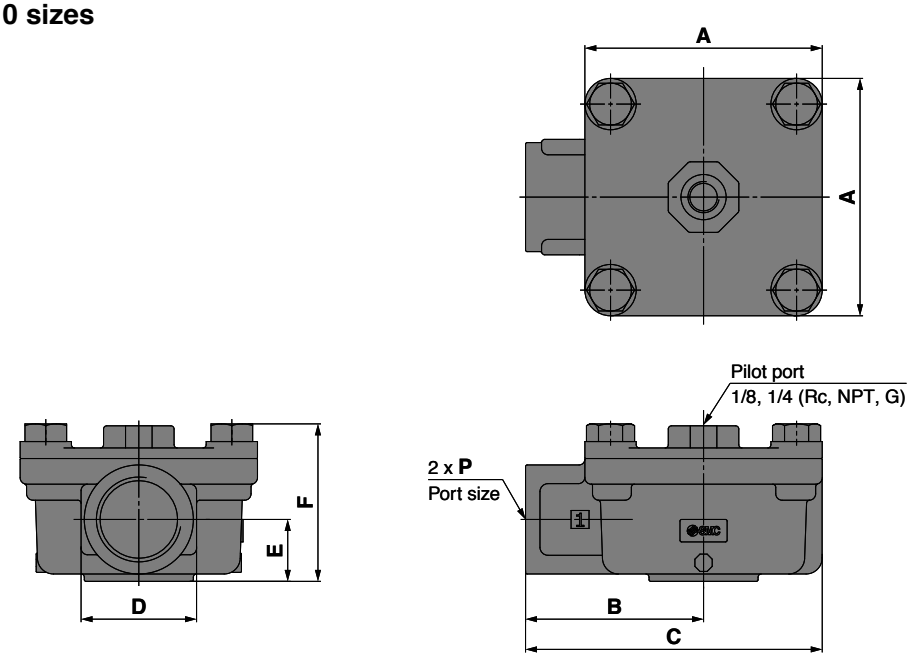

Port size: 14 size

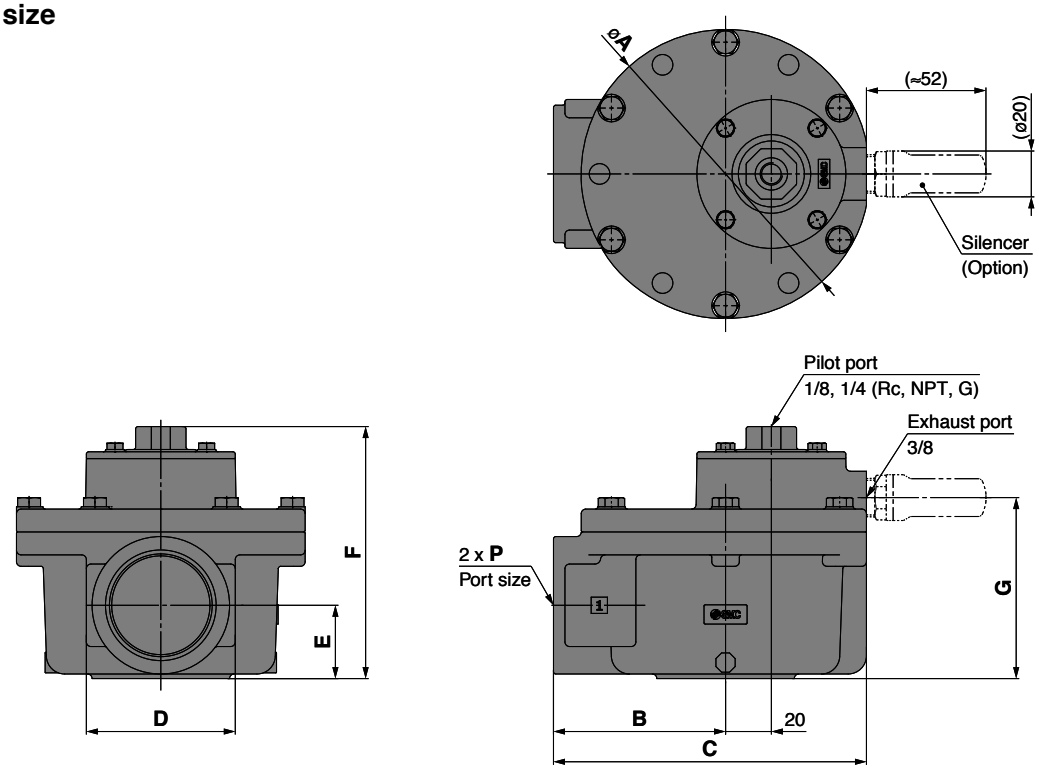

Dimensions

Model	Port size P	A	B	C	D	E	F	G
JSXFAF-06	3/4”	2.91” (74mm)	2.18” (55.5mm)	3.64” (92.5mm)	1.42” (36mm)	0.76” (19.3mm)	1.92” (48.8mm)	—
JSXFAF-10	1”	3.7” (94mm)	2.5” (63.5mm)	4.35” (110.5mm)	1.73” (44mm)	0.87” (22.2mm)	2.37” (60.2mm)	—
JSXFAF-14	1 1/2”	4.96” (126mm)	2.96” (75.1mm)	5.38” (136.6mm)	2.56” (65mm)	1.26” (32mm)	4.33” (110mm)	3.11” (79mm)

Dimensions: JSXFAH/Immersion Type

Port size: Size 10

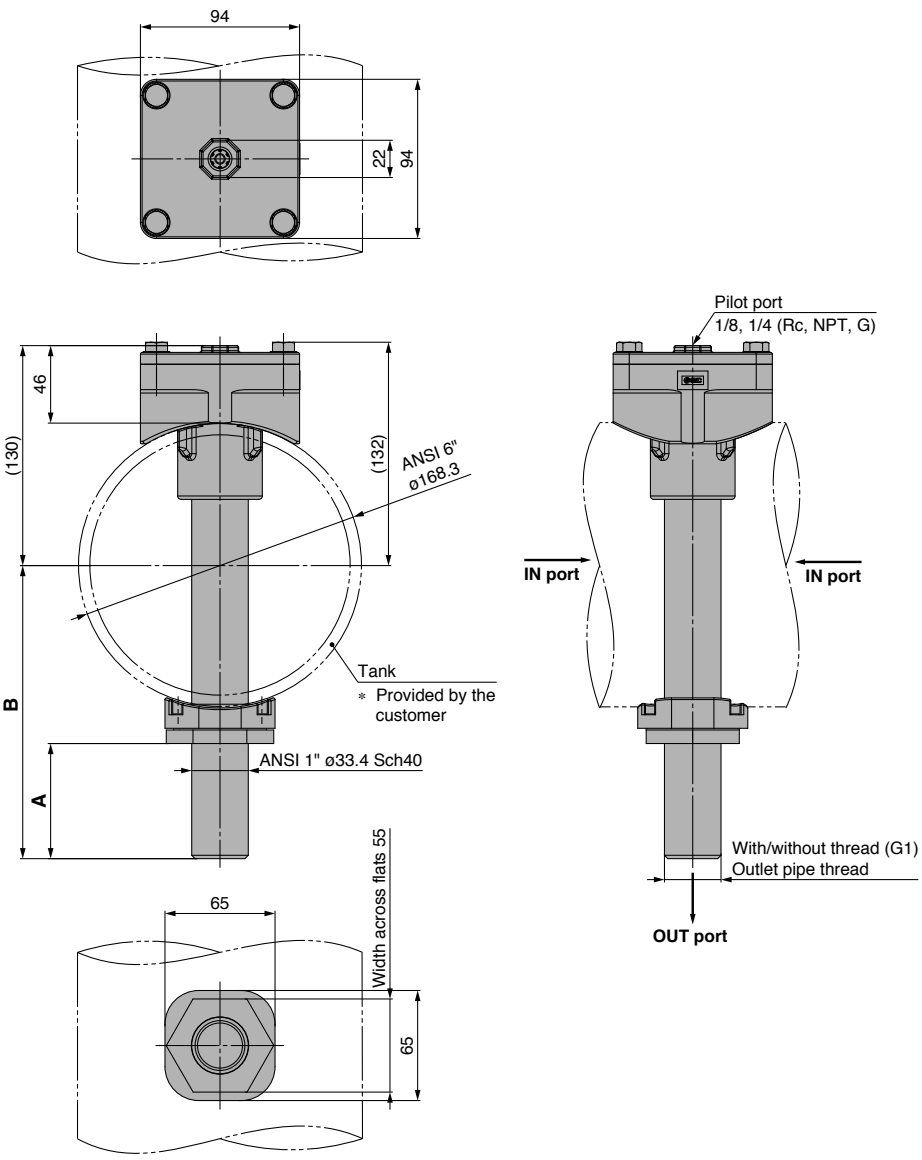

Outlet pipe dimensions and thread type

Part no.		JSXFAH6-10□1-B□	JSXFAH6-10□2-B□	JSXFAH6-10□3-B□	JSXFAH6-10□4-B□
Outlet pipe dimensions	A	68	108	68	108
	B	173 ±5	213 ±5	173 ±5	213 ±5
Thread type		—	—	G1" x 50	G1" x 90
Pipe thread (Pipe for the OUT port)		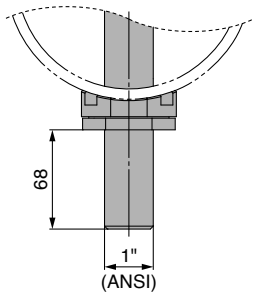	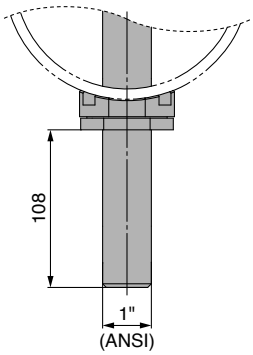	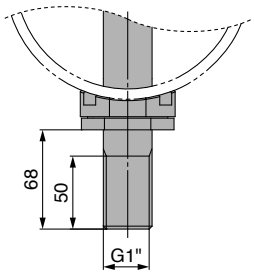	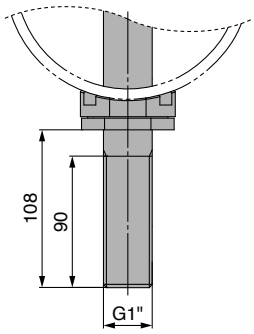

Dimensions: JSXFAH/Immersion Type

Dimensions on the tank side

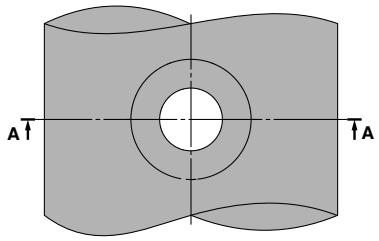

Straight hole type

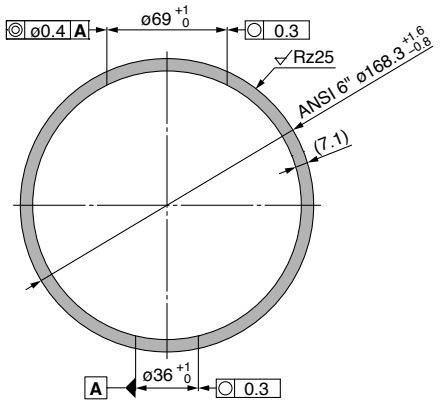

Tapered hole type

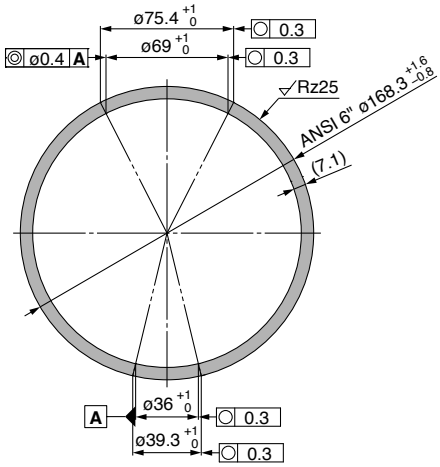

Pitch between the tank holes

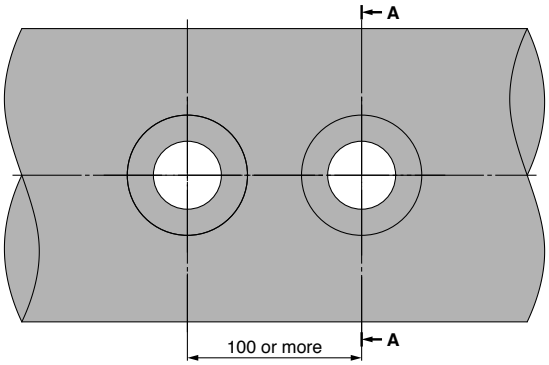

Working Principle

Port size: 06, 10 sizes

De-energized

The air enters from the IN side goes through the supply orifice of the main valve to fill the pressure action chamber. The main valve is closed by the pressure built in the pressure action chamber.

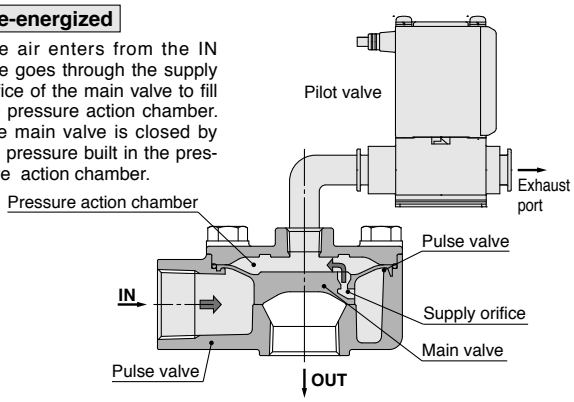

Right after energized

When the pilot valve is energized, the armature opens, and the air filling the pressure action chamber is released to the atmosphere through the pilot valve.

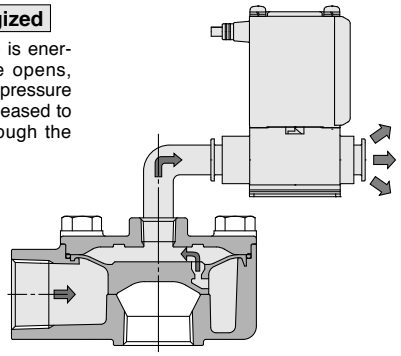

Energized (Main valve open)

Due to the release of air from the pilot valve to atmosphere, the pressure in the pressure action chamber decreases (force pushing the main valve down < force pushing the main valve up), opening the main valve. Because of this, the air flows to the OUT side.

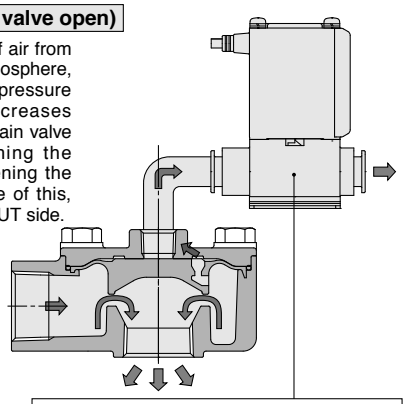

⚠Caution p. 3 Selection of Pilot Valve

Port size: 14 size

De-energized

The air enters from the IN side goes through the supply orifice of the main valve and sub-valve to fill the pressure action chamber. The main valve and sub-valve are closed by the pressure built in the pressure action chamber.

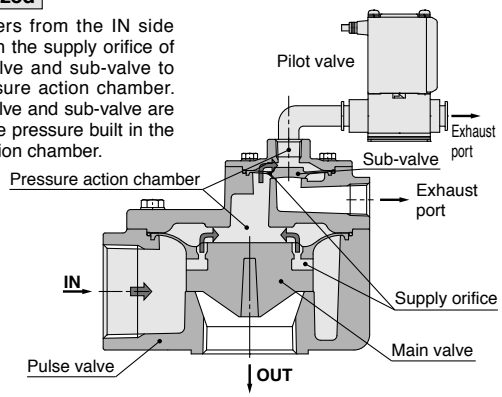

Right after energized

When the pilot valve is energized, the armature opens, and the air filling the pressure action chamber ① is released to the atmosphere through the pilot valve.

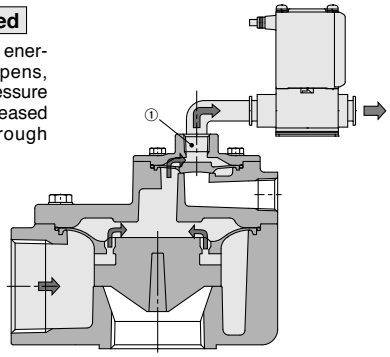

Energized (Sub-valve open)

Due to the release of air from the pilot valve to atmosphere, the pressure in the sub-valve pressure action chamber ① decreases (force pushing the sub-valve down < force pushing the sub-valve up), opening the sub-valve. Because of this, the air filling the pressure action chamber ② is released to the atmosphere from the exhaust port.

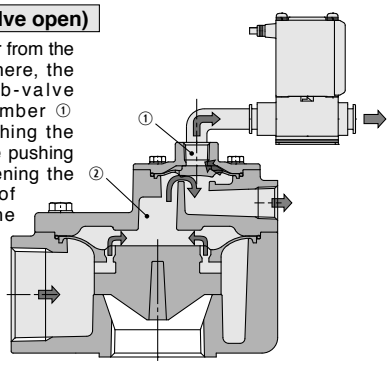

Energized (Main valve open)

Due to the release of air from the pressure action chamber ②, the pressure in the pressure action chamber ② decreases (force pushing the main valve down < force pushing the main valve up), opening the main valve. Because of this, the air flows to the OUT side of the pulse valve.

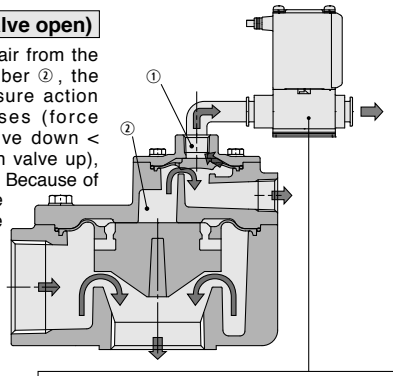

⚠Caution p. 3 Selection of Pilot Valve

* The figure shows the JSXFAF

Replacement Parts

Model	Replacement part number		
	Main valve assembly (Main valve + O-ring)	Sub-valve assembly (Sub-valve + O-ring)	Silencer
JSXFA(E, F)-06□-B-□	JSXF-06B-KT	—	—
JSXFA(E, F)-06□-B-□A	JSXF-06B-A-KT	—	—
JSXFA(E, F)-10□-B-□	JSXF-10B-KT	—	—
JSXFA(E, F)-10□-B-□A	JSXF-10B-A-KT	—	—
JSXFA(E, F)-14□-B-□	JSXF-14B-KT	JSXF-14B-KT2	AN30-03 (14R, 14F), AN30-N03 (14N)

Disassembly/Assembly Procedure

⚠Caution

1. Before starting the disassembly work, be sure to shut off the power supply and pressure supply, and then release the residual pressure.

Disassembly

1) Loosen the hexagon bolts and remove the bonnet, O-ring, and main valve (sub-valve).

Assembly

1) Assemble the main valve (sub-valve) to the body. The main valve (sub-valve) has a required mounting direction. **Assemble the valve referring to Fig. 1.**
   If the valve is assembled in incorrect direction, it can cause a malfunction.
2) Mount the O-ring to the body groove. (See Fig. 2.) After mounting of the O-ring, check if the O-ring is fitted properly in the groove. If it is out of the groove, external leakage and/or operation failure may occur.
3) Assemble the bonnet to the body.
4) Tighten the hexagon bolts diagonally. (See Table 1 for the tightening torque.)

Table 1 Proper Tightening Torque [in•lb (N•m)]

JSXFA□-06□		110.63 to 122.14 (12.5 to 13.8)
JSXFA□-10□		110.63 to 122.14 (12.5 to 13.8)
JSXFA□-14□	Main valve	46.02 to 50.45 (5.2 to 5.7)
	Sub-valve	13.28 to 15.05 (1.5 to 1.7)

Port size: 06, 10

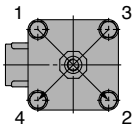

Port size: 14

Main valve

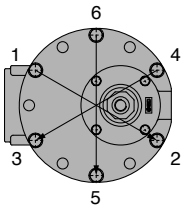

Sub-valve

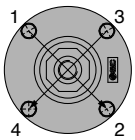

Port size: 06, 10

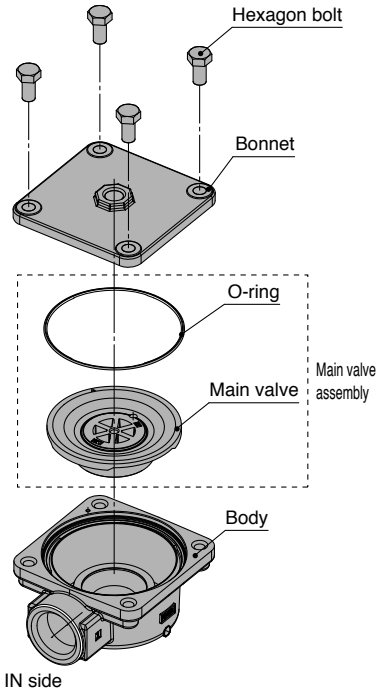

Port size: 14

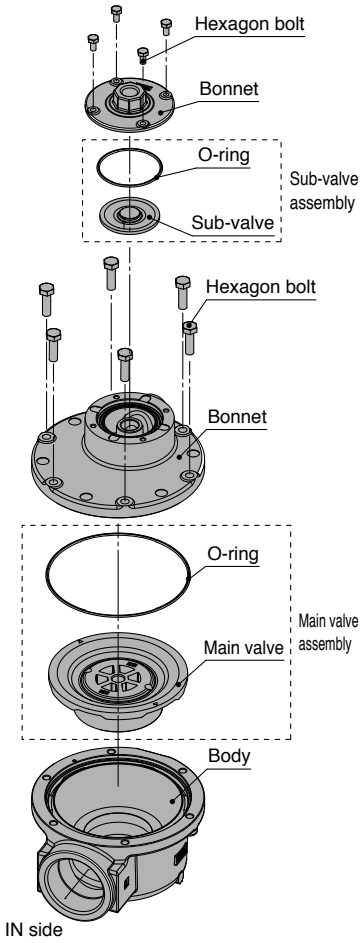

Fig. 2 O-ring position

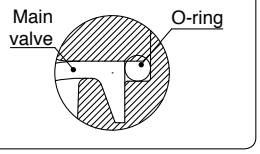

Fig. 1 Valve position

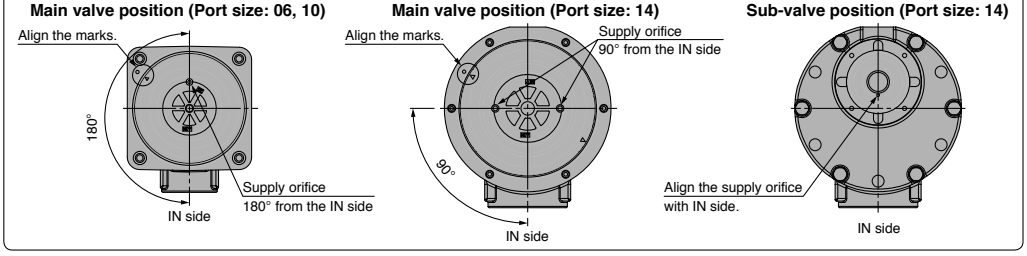

ATEX Compliant

II 2 G Ex h IIB T6 Gb
II 2 D Ex h IIIB T72°C Db
–40°C ≤ Ta ≤ +60°C

RoHS

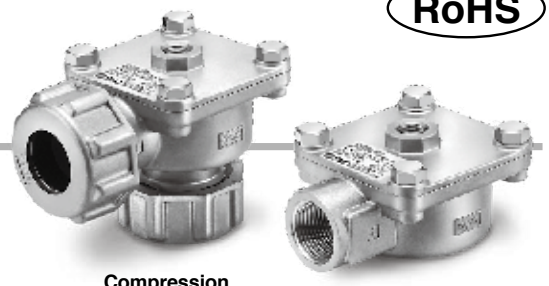

Compression fitting type

Direct piping type

How to Order

55 – JSXFA E – 06 R – B – □ 1

• ATEX category 2 ① ② ③ ④ ⑤ ⑥

① Piping

E	Compression fitting type*1
F	Direct piping type

*1 Seals and washers are included.

② IN/OUT port size

06	3/4 (20A)
10	1 (25A)
14	1 1/2 (40A)

③ Thread type

R	Rc
N	NPT
F	G

④ Fluid and ambient temperatures

B	–40 to 60°C

⑤ With/without silencer

		Port size		
		06	10	14
Nil	Without	●	●	●
S	With	–	–	●

* Port size: 14 only
Select Nil for 06 and 10.

⑥ Pilot port size

Nil	1/4
1	1/8

Symbol

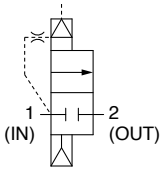

⚠ Caution

Selection of Pilot Valve

For the pilot valve orifice diameter, ø5 mm or larger is recommended.

When the pilot orifice diameter is ø3 mm or larger and less than ø5 mm, put "**A**" to the end of the product number for made-to-order. The product may not operate correctly if the pilot valve orifice diameter is inadequate. (port size: 3/4, 1) Depending on the pilot piping port size*1 or length, the valve may not operate correctly.

*1 The I.D. of the pilot piping must be larger than the pilot valve orifice diameter to use. The maximum pilot piping I.D. is 10 mm.

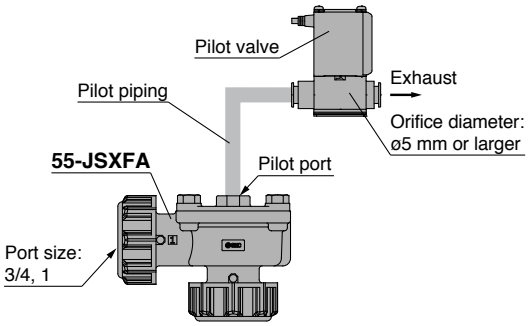

Made to Order

Pilot valve orifice diameter: Special specification

A	For ø3 mm to ø5 mm	Port size: 06, 10

55-JSXFA □ - □ □ - B - □ □ A

Enter the standard product number.

Specifications

Series		55-JSXFA		
		06	10	14
Orifice diameter [mm]		ø32	ø40	ø50
Port size		3/4	1	1 1/2
Fluid		Air		
Min. operating pressure differential [MPa]		0.1		
Max. operating pressure differential [MPa]		0.9		
Max. system pressure [MPa]		0.9		
Fluid temperature [°C]		–40*1 to 60		
Ambient temperature [°C]		–40 to 60		
Weight [g]	Compression fitting type	470	910	1850
	Direct piping type	290	500	1230

*1 No condensation

Replacement Parts

Model	Replacement part number		
	Main valve assembly (Main valve + O-ring)	Sub-valve assembly (Sub-valve + O-ring)	Silencer
55-JSXFA(E, F)-06□-B-□	JSXF-06B-KT	–	–
55-JSXFA(E, F)-06□-B-□A	JSXF-06B-A-KT	–	–
55-JSXFA(E, F)-10□-B-□	JSXF-10B-KT	–	–
55-JSXFA(E, F)-10□-B-□A	JSXF-10B-A-KT	–	–
55-JSXFA(E, F)-14□-B-□	JSXF-14B-KT	JSXF-14B-KT2	AN30-03 (14R, 14F), AN30-N03 (14N)

[Excludes the VXFC□A] RoHS

Dedicated Controller for Operation / VXFC Series

How to Order Controller

VXFC 06 D

Number of output points

06	6 output points
10	10 output points

Voltage

D	24 to 48 VDC
D-6	12 VDC
A	85 to 240 VAC

∗1 "A" is not a CE marked product.

[Application example]

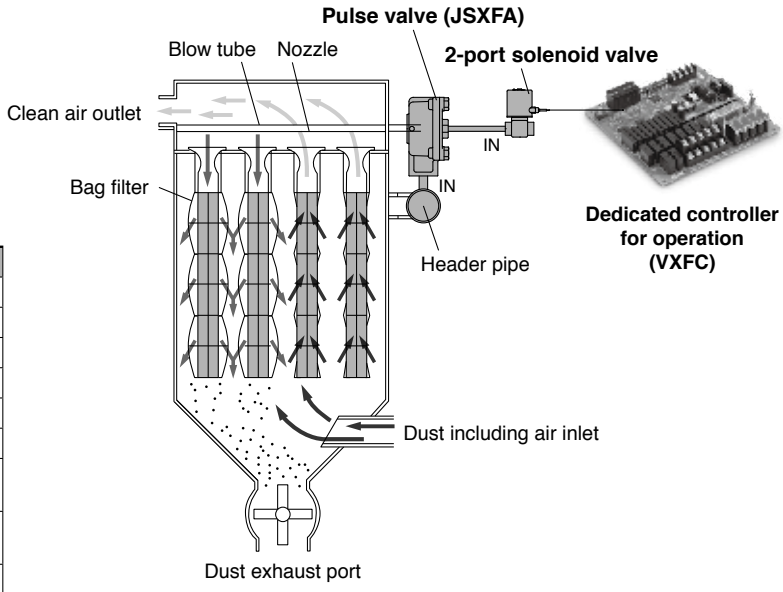

Specifications

Model		VXFC$^{06}_{10}$A	VXFC$^{06}_{10}$D	VXFC$^{06}_{10}$D-6
Input voltage		85 to 240 VAC	24 to 48 VDC	12 VDC
Output voltage		Same as input voltage		
Time setting	ON	0.01 to 0.99 sec.		
	OFF	0 to 299 sec.		
	Time accuracy	±2%		
Number of outputs		6 to 10 points		
Operating ambient temperature		0 to 50°C (No condensation allowed)		
Operating ambient humidity		45 to 80% (No condensation allowed)		
Output current		0.5 A or less	0.5 A or less	0.5 A or less
Power supply fuse		3 A	1 A	1 A

Two-time Hitting Function

A two-time hitting function is adopted to improve the bag filter dusting efficiency. Turn ON the DIP switch for two-time hitting (OFF for one-time hitting).
(Effective up to the number of setting channels)

Operation sequence diagram

For { 4 output points; Two-time hitting only for CH2; ON for 1 sec.; OFF for 2 sec. }

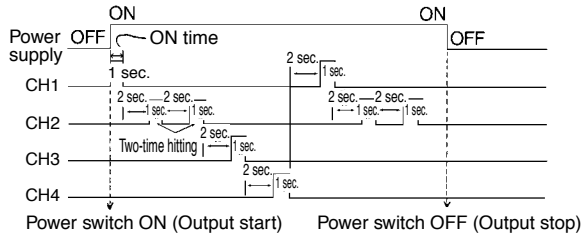

Interrupt Operation Function

Interrupting an operation from an external switch is possible using input signals.

Operation sequence diagram

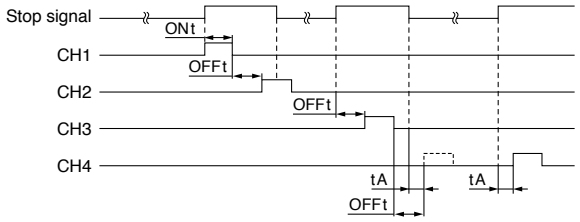

Cascade Connection (Multiple-board connection)

VXFC10: One board only allows 10 output points max., but the points can be increased to 20 or 30 output points by connecting cascades.

Connection

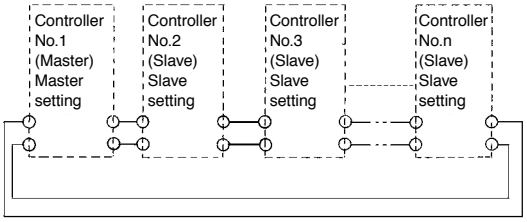

Operation sequence diagram

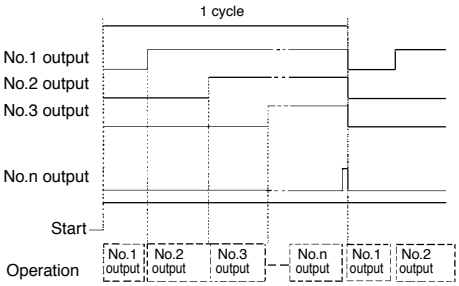

Dimensions

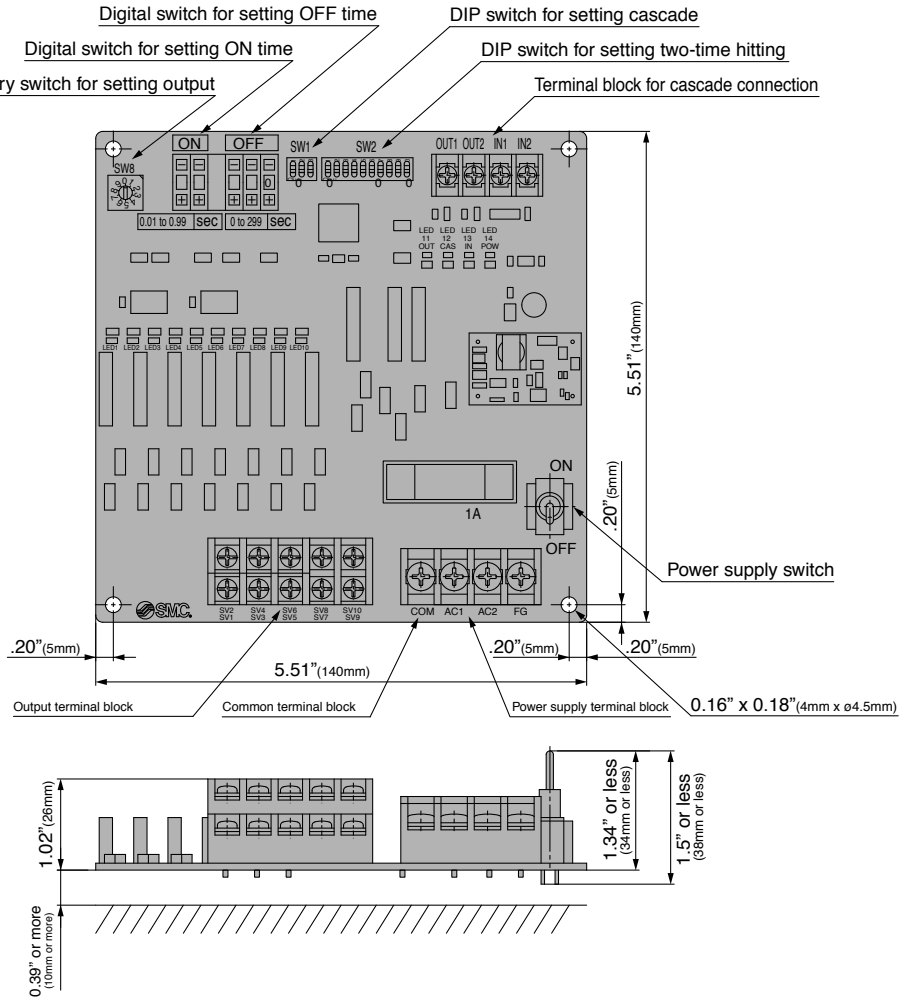

JSXFA Series / Glossary of Terms

Pressure Terminology

1. Maximum operating pressure differential

The maximum pressure differential (the difference between the inlet and outlet pressure) which is allowed for operation. When the outlet pressure is 0 MPa, this becomes the maximum operating pressure.

2. Minimum operating pressure differential

The minimum pressure differential (the difference between the inlet pressure and outlet pressure) required to keep the main valve fully open.

3. Maximum system pressure

The maximum pressure that can be applied inside the pipelines (line pressure).
[The pressure differential of the solenoid valve portion must not exceed the maximum operating pressure differential.]

Other

1. Symbol

In the symbol (), when the valve is closed, flow is blocked from port 1 to port 2. However, if the pressure in port 2 is higher than port 1, the valve will not be able to block the fluid and it will flow from port 2 to port 1.

Be sure to read this before handling the products. Refer to back cover for safety instructions. For 2-port solenoid valve for fluid control precautions, refer to the "Handling Precautions for SMC Products" and the "Operation Manual" on the SMC website.

Design

⚠Warning

1. Cannot be used as an emergency shutoff valve, etc.

The valves presented in this catalog are not designed for safety applications such as an emergency shutoff valve. If the valves are used in this type of system, other reliable safety assurance measures should also be adopted.

2. Continuous valve open

The valve is for pulse operation. Do not open the valve continuously. Since a large amount of air is consumed, the diaphragm will oscillate (chatter) due to insufficient air supply on the inlet side, and this can lead to failure.

Silencer

⚠Caution

1. The silencer's response properties do not change in the initial stage, but will change due to the blockage after long use. Replace it after using about 500,000 times. This number is subject to change based on fluid quality and energizing time.

2. When using a silencer, make space for silencer replacement.

Selection

⚠Warning

1. Air quality

1. Use clean air.

Do not use compressed air that contains chemicals, synthetic oils that include organic solvents, salt, corrosive gases, etc., as it can cause damage or malfunction.

2. Install an air filter.

Install an air filter upstream near the valve. Select an air filter with a filtration size of 5 μm or smaller.

3. Install an aftercooler, air dryer, etc.

Compressed air that contains excessive drainage may cause the malfunction of valves and other pneumatic equipment. To prevent this, install an aftercooler, air dryer, etc.

4. If excessive carbon powder is generated, eliminate it by installing mist separators on the upstream side of valves.

If excessive carbon powder is generated by the compressor, it may adhere to the inside of the valves and cause malfunction.

For compressed air quality, refer to the Best Pneumatics No. 6 catalog.

2. Ambient environment

Use within the operable ambient temperature range. Confirm the compatibility between the product's composition materials and the ambient atmosphere. Be certain that the fluid used does not touch the external surface of the product.

Selection

⚠Warning

3. Countermeasures against static electricity

Take measures to prevent static electricity, since some fluids can cause static electricity.

4. Low temperature operation

1. The valve can be used in fluid temperatures down to –40°C. However, take measures to prevent the freezing or solidification of impurities, etc.
2. The installation of a dryer, retaining the heat of the body, etc., is recommended to prevent a freezing condition in which the dew point temperature is high and the ambient temperature is low, or the high flow is running.

5. Fluid properties

Use a general compressed air with a filter of 5 μm or less mounted on the inlet of the piping. (Excluding dry air)

⚠Caution

1. Leakage voltage

When the solenoid valve is operated using the controller, etc., the leakage voltage should be the product allowable leakage voltage or less. Particularly when using a resistor in parallel with a switching element and using a C-R element (surge voltage suppressor) to protect the switching element, take note that leakage current will flow through the resistor, C-R element, etc., creating a possible danger that the valve may not turn off.

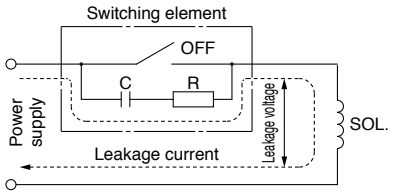

AC coil: 5% or less of rated voltage
DC coil: 2% or less of rated voltage

Mounting

⚠Warning

1. If air leakage increases or equipment does not operate properly, stop operation.

After mounting is completed, confirm that it has been done correctly by performing a suitable function test.

2. Avoid sources of vibration, or change the fixing method to avoid resonance.

3. Painting and coating

Warnings or specifications printed or labeled on the product should not be erased, removed, or covered up.

Be sure to read this before handling the products. Refer to page 19 for safety instructions.
For 2-port solenoid valve for fluid control precautions, refer to the "Handling Precautions for SMC Products" and the "Operation Manual" on the SMC website.

Piping

⚠Warning

1. **During use, deterioration of the tubes or damage to the fittings could cause the tubes to come loose from their fittings and thrash about.**
   To prevent uncontrolled tube movement, install protective covers or fasten tubes securely in place.
2. **Do not use the compression fitting of the valve to support the piping. The piping could disconnect from the valve. Be sure to mount the valve to secured piping. (Compression fittings do not have a valve-holding function.)**

⚠Caution

1. **Use a steel tube for the IN and OUT piping.**
2. **Preparation before piping**
   Before piping is connected, it should be thoroughly blown out with air (flushing) or washed to remove chips, cutting oil, and other debris from inside the pipe.
   Install piping so that it does not apply pulling, pressing, bending, or other forces on the valve body.
3. **Avoid connecting ground lines to piping, as this may cause electric corrosion in the system.**
4. **Always tighten threads with the proper tightening torque.**
   When attaching fittings to valves, tighten with the proper tightening torque as shown below.

Tightening Torque for Piping

Connection thread	Proper tightening torque [N·m]
Rc1/4	12 to 14
Rc3/8	22 to 24
Rc1/2	28 to 30
Rc3/4	28 to 30
Rc1	36 to 38
Rc1 1/2	40 to 42

5. **Tightening of the compression nut**
   Be sure to tighten the compressor nut sufficiently to prevent the nut from loosening and to prevent leakage from occurring.

Wrench Tightening Angle after Hand-tightening (Guide for tightening the nut)

Size	Wrench tightening angle
3/4 (20A)	90° to 270°
1 (25A)	135° to 315°
1 1/2 (40A)	150° to 330°

- **Mount the valve to secured piping.**
- **Insert the piping until it stops to prevent the piping from going in slanted.**
- **Do not expose the piping to oil or moisture. Otherwise, the valve may come off easily.**
- **Sealing performance will decrease due to the deterioration of seals. Tighten the compression nut regularly.**

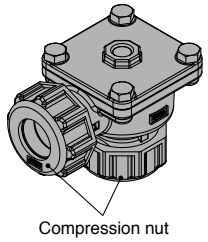

Cross section of the nut

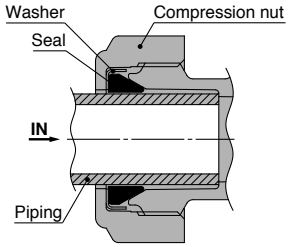

⚠Caution

6. **Installation of the immersion type**
   - For the immersion type, adequately tighten and check the pipe assembly to prevent leakage, looseness, and play.
   - As shown in the figure, install the valve onto the tank, then insert the pipe assembly into the OUT port of the valve from the opposite side. After that, screw it in using the tightening torque indicated in the table below.
     Do not apply excessive torque because this may cause the valve to break or the tank to become deformed or damaged.
     When applying any additional tightening force, use the angle or torque indicated below as a guide after the support and tank are in contact with each other. (Refer to Fig. 1 and Fig. 2.) When screwing in the pipe assembly, hold it in place using a wrench to prevent it from turning. (Fig. 3)
     The recommended tank is the ANSI shc40. If making your own tank, ensure that it has sufficient strength to prevent it from becoming deformed when the valve is being screwed in.

∗ Note that if the pipe assembly is inserted obliquely into the OUT port of the valve, the O-ring inside the valve may become damaged as a result. Ensure that the pipe assembly is inserted straight.
∗ Sometimes the pipe assembly becomes loose due to vibration caused by air discharge, so be sure to periodically tighten the pipe assembly. Also, if necessary, coat the threaded part of the valve with a locking agent.

Pipe Assembly Wrench Tightening Angle (Guide)

Size	Wrench tightening angle	Tightening torque
1 (25A)	10 to 15°	50 to 100 N·m

Procedure for installing the valve on the tank

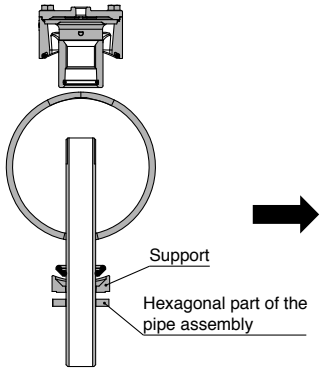

Fig. 1

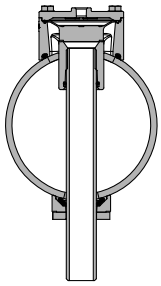

Fig. 2

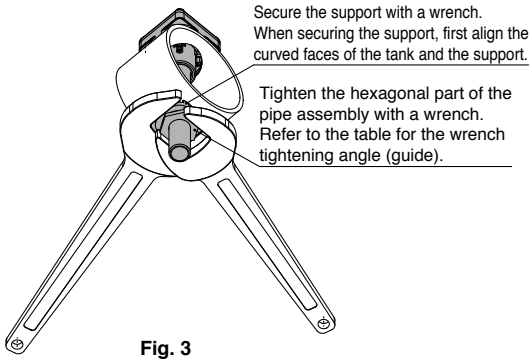

Fig. 3

Be sure to read this before handling the products. Refer to back cover for safety instructions. For 2-port solenoid valve for fluid control precautions, refer to the "Handling Precautions for SMC Products" and the "Operation Manual" on the SMC website.

Piping

⚠Caution

7. When connecting piping to a product
Avoid mistakes regarding the supply port, etc.

8. If a regulator, or a restrictor, is installed immediately before or after the IN port of the valve, the main valve may oscillate (chatter). Install them away from the valve or change the restriction.

9. The header tank capacity should be sufficient. (Install a sufficient air volume immediately upstream from the IN side) This is a valve for large flow rate, so if the capacity is small, the main valve may not open or may oscillate due to pressure drop or insufficient air supply.

Operating Environment

⚠Warning

1. Do not use in an atmosphere containing corrosive gases, chemicals, sea water, water vapor, or where there is direct contact with any of these.

2. The standard model cannot be used in explosive atmospheres. For use in explosive atmospheres, select the 55-JSXFA. (Refer to page 13.)

3. Do not use in locations subject to vibration or impact.

4. Do not use in locations where radiated heat will be received from nearby heat sources.

5. Employ suitable protective measures in locations where there is contact with oil, welding spatter, etc.

Maintenance

⚠Warning

1. Removal of product
The valve becomes hot depending on the fluid temperature. Confirm that the valve temperature has dropped sufficiently before performing work. If touched inadvertently, there is a danger of being burned.
1. Shut off the fluid supply and release the fluid pressure in the system.
2. Shut off the power supply.
3. Dismount the product.

2. Low frequency operation
Switch valves at least once every 30 days to prevent malfunction. Also, in order to use them under the optimum state, conduct a regular inspection biannually.

3. Disassembly
Do not disassemble for purposes other than the main valve replacement, or malfunction may occur.
Refer to the Disassembly/Assembly Procedure on page 12 for the replacement of the main valve.

Maintenance

⚠Caution

1. Filters
1. Be careful regarding clogging of filters.
2. Replace filter elements after one year of use, or earlier if the pressure drop reaches 0.1 MPa.

2. Storage
In case of long term storage after use, thoroughly remove all moisture to prevent rust, the deterioration of rubber materials, etc.

3. Exhaust the drainage from air filters periodically.

Appearance

⚠Caution

1. Surface treatment is applied to the product to improve corrosion resistance. There may be spot pattern on the surface depending on the treatment condition, but there is no problem in use.

Dedicated Controller for Operation VXFC Series

Wiring

⚠Warning

1. The controller starts its output the moment the power switch is turned ON. Be aware that even if the power switch is turned OFF, power is connected to the terminal block.

⚠Caution

1. Make sure that the power supply voltage to be input matches the voltage in the controller's specifications. The power supply voltage that has been input becomes the voltage that is output to the solenoid valves.

2. Connect a ground that is rated Class 3 or greater to the power supply terminal block's FG.

3. If the power source is DC, use caution to its polarity. If the polarity is incorrect, it may result in a malfunction or damage.

4. For details, refer to the separate Operation Manual.

5. The solenoid valve mounted on the controller should be equipped with a surge voltage suppressor.

Operating Environment

⚠Warning

1. Operate under conditions that are free of vibration and impact.

2. Operate in an ambient temperature range between 0°C and 50°C.

3. Operate in an ambient humidity range between 45% to 80% (no condensation).

These safety instructions are intended to prevent hazardous situations and/or equipment damage. These instructions indicate the level of potential hazard with the labels of "*Cautions*", *"Warning"* or *"Danger"*. They are all important notes for safety and must be followed in addition to International Standards (ISO/IEC)*1), and other safety regulations.

⚠ Caution: **Caution** indicates a hazard with a low level of risk which, if not avoided, could result in minor or moderate injury.

⚠ Warning: **Warning** indicates a hazard with a medium level of risk which, if not avoided, could result in death or serious injury.

⚠ Danger : **Danger** indicates a hazard with a high level of risk which, if not avoided, will result in death or serious injury.

*1) ISO 4414: Pneumatic fluid power – General rules relating to systems.
ISO 4413: Hydraulic fluid power – General rules relating to systems.
IEC 60204-1: Safety of machinery – Electrical equipment of machines. (Part 1: General requirements)
ISO 10218-1: Manipulating industrial robots – Safety.
etc.

⚠ Warning

1. **The compatibility of the product is the responsibility of the person who designs the equipment or decides its specifications.**
   Since the product specified here is used under various operating conditions, its compatibility with specific equipment must be decided by the person who designs the equipment or decides its specifications based on necessary analysis and test results. The expected performance and safety assurance of the equipment will be the responsibility of the person who has determined its compatibility with the product. This person should also continuously review all specifications of the product referring to its latest catalog information, with a view to giving due consideration to any possibility of equipment failure when configuring the equipment.
2. **Only personnel with appropriate training should operate machinery and equipment.**
   The product specified here may become unsafe if handled incorrectly. The assembly, operation and maintenance of machines or equipment including our products must be performed by an operator who is appropriately trained and experienced.
3. **Do not service or attempt to remove product and machinery/equipment until safety is confirmed.**
   1. The inspection and maintenance of machinery/equipment should only be performed after measures to prevent falling or runaway of the driven objects have been confirmed.
   2. When the product is to be removed, confirm that the safety measures as mentioned above are implemented and the power from any appropriate source is cut, and read and understand the specific product precautions of all relevant products carefully.
   3. Before machinery/equipment is restarted, take measures to prevent unexpected operation and malfunction.
4. **Contact SMC beforehand and take special consideration of safety measures if the product is to be used in any of the following conditions.**
   1. Conditions and environments outside of the given specifications, or use outdoors or in a place exposed to direct sunlight.
   2. Installation on equipment in conjunction with atomic energy, railways, air navigation, space, shipping, vehicles, military, medical treatment, combustion and recreation, or equipment in contact with food and beverages, emergency stop circuits, clutch and brake circuits in press applications, safety equipment or other applications unsuitable for the standard specifications described in the product catalog.
   3. An application which could have negative effects on people, property, or animals requiring special safety analysis.
   4. Use in an interlock circuit, which requires the provision of double interlock for possible failure by using a mechanical protective function, and periodical checks to confirm proper operation.

⚠ Caution

1. **The product is provided for use in manufacturing industries.**
   The product herein described is basically provided for peaceful use in manufacturing industries.
   If considering using the product in other industries, consult SMC beforehand and exchange specifications or a contract if necessary.
   If anything is unclear, contact your nearest sales branch.

Limited warranty and Disclaimer/ Compliance Requirements

The product used is subject to the following "Limited warranty and Disclaimer" and "Compliance Requirements".
Read and accept them before using the product.

Limited warranty and Disclaimer

1. The warranty period of the product is 1 year in service or 1.5 years after the product is delivered, whichever is first.*2)
   Also, the product may have specified durability, running distance or replacement parts. Please consult your nearest sales branch.
2. For any failure or damage reported within the warranty period which is clearly our responsibility, a replacement product or necessary parts will be provided.
   This limited warranty applies only to our product independently, and not to any other damage incurred due to the failure of the product.
3. Prior to using SMC products, please read and understand the warranty terms and disclaimers noted in the specified catalog for the particular products.

   ***2) Vacuum pads are excluded from this 1 year warranty.**
   A vacuum pad is a consumable part, so it is warranted for a year after it is delivered.
   Also, even within the warranty period, the wear of a product due to the use of the vacuum pad or failure due to the deterioration of rubber material are not covered by the limited warranty.

Compliance Requirements

1. The use of SMC products with production equipment for the manufacture of weapons of mass destruction (WMD) or any other weapon is strictly prohibited.
2. The exports of SMC products or technology from one country to another are governed by the relevant security laws and regulations of the countries involved in the transaction. Prior to the shipment of a SMC product to another country, assure that all local rules governing that export are known and followed.

⚠ Caution

SMC products are not intended for use as instruments for legal metrology.
Measurement instruments that SMC manufactures or sells have not been qualified by type approval tests relevant to the metrology (measurement) laws of each country. Therefore, SMC products cannot be used for business or certification ordained by the metrology (measurement) laws of each country.

⚠ Safety Instructions Be sure to read the "Handling Precautions for SMC Products" (M-E03-3) and "Operation Manual" before use.

UNIT CONVERSIONS

	unit	conversion	result		unit	conversion	result
length	m	x 3.28	ft	pressure	MPa	x 145	psi
	mm	x 0.04	in		kPa	÷ 6.895	psi
mass	g	x 0.04	oz	temperature	°C	x1.8 then add 32	°F
volume	cm^3	÷ 16.387	in^3	torque	N·m	x 0.738	ft-lb
	L	x 61.024	in^3	force	N	÷ 4.448	lbf
speed	mm/s	÷ 25.4	in/s	flow	L/min	÷ 28.317	cfm

o o o o e c

SMC® s es s c s co
r q s c o co