Fieldbus System

(For Input/Output)

IP65

New A PROFIsafe compatible product has been added.

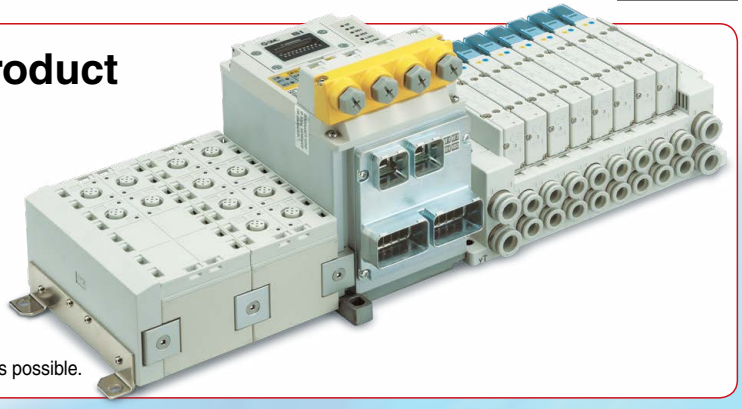

- Product certification obtained by a third party (IEC 61508/62061 SIL 3, ISO 13849 PL e Cat. 4)
- Equipped with 8 safety input points and 4 safety output points
- The individual control of safety outputs (valves: 3 zones, modules: 1 zone) is possible.

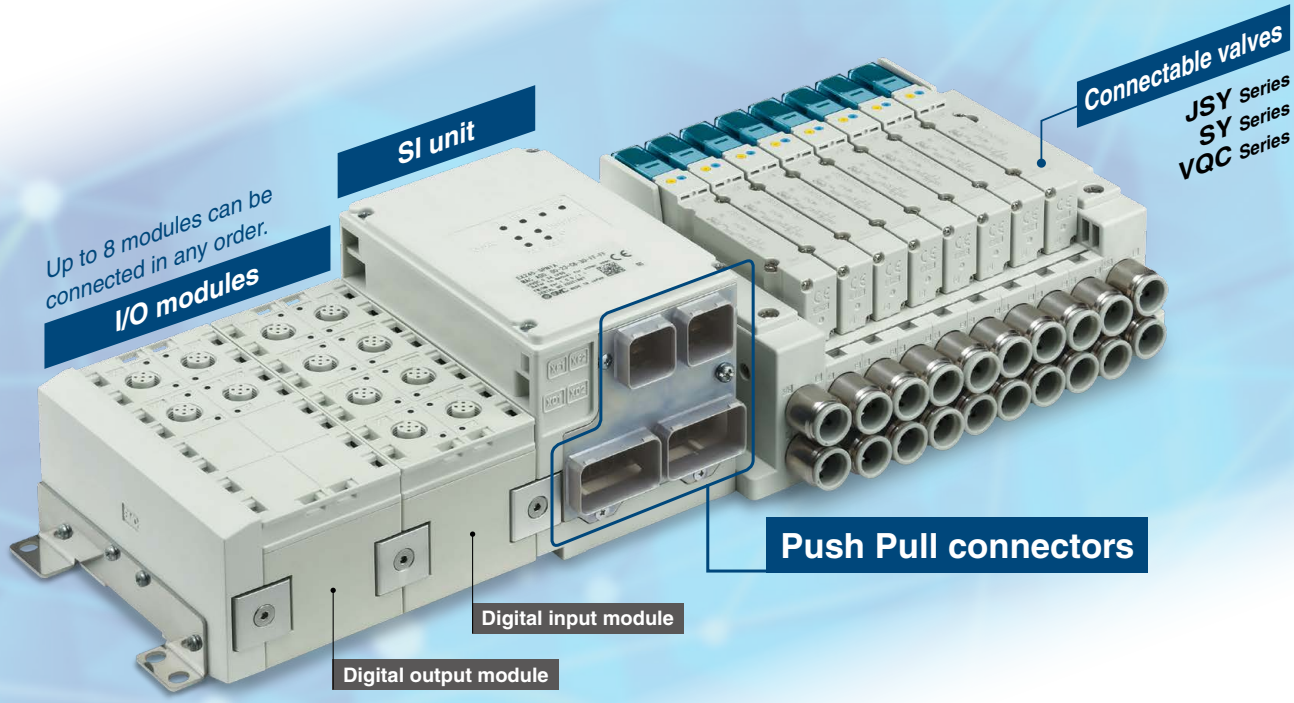

AIDA*1 specifications compliant

Push Pull connectors One-touch mounting/removal allows for reduced labor.

SCRJ connectors

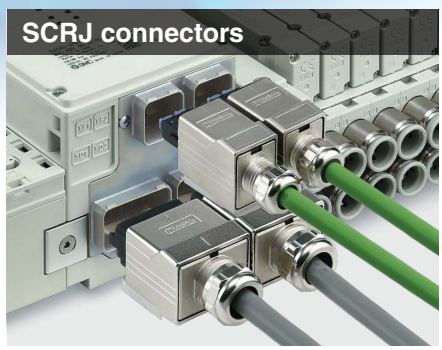

RJ45 connectors

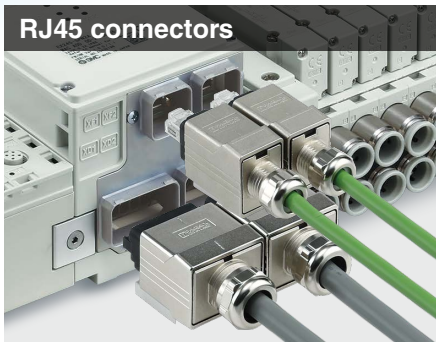

General-purpose connectors

*1 Abbreviation of the Automation Initiative of German (Deutschland) Automobile Manufacturers

EX245 Series

SMC

CAT.E02-29B

Compatible with the PROFIenergy energy-saving function

PROFINET

PROFIenergy

Generally, after factory facilities are shut down, it takes a lot of time to restart them.
PROFIenergy enables PROFINET communication to continue while saving energy by minimizing restart times. When the commands for PROFIenergy energy-saving mode are sent from the I/O controller (PLC) to the I/O device (SI unit), information regarding downtimes is also sent (such as lunch breaks, nighttime, weekends, and holidays).
SMC SI units do not require time for restarting. However, for the connected I/O equipment, such as pressure switches, flow switches, auto switches, and valves, 3 types of energy-saving modes are available for customers to choose from depending on the application.

Mode	Output (Valve/Digital)	Input device (Pressure switch, flow switch, auto switch, etc.)	Input data
Shut down/Clear value mode	OFF	OFF (Power supply)	OFF
Shut down/Hold last value mode	Hold	OFF (Power supply)	Hold
PROCEED mode	Hold	Hold	Hold

Shared Device function

PROFINET

An I/O module connected to an SI unit can be controlled by multiple I/O controllers (PLC).

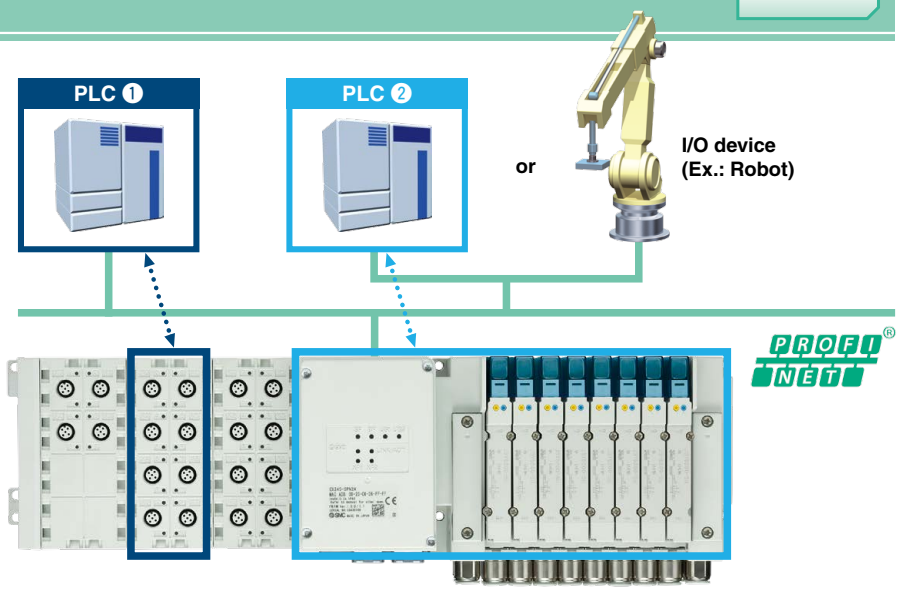

- Information can be shared with up to 3 controllers in addition to the control PLC.
- The cost of the hardware, cables, and installation space can be reduced.

PLC ① to ③: For monitoring
PLC ④ : For control

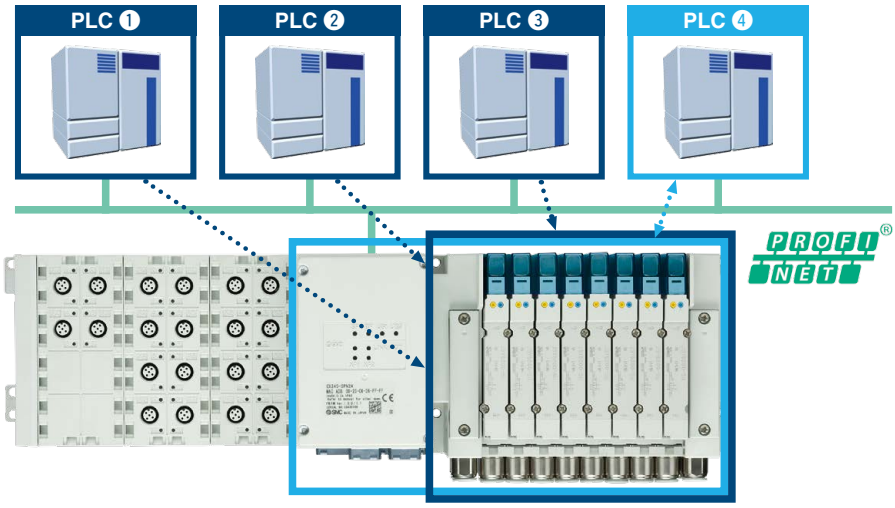

∗ The Shared Device function enables an I/O module connected to the I/O device to be controlled by multiple I/O controllers (PLC). The control status can be shared among other I/O controllers. As the function can be used across the entire PROFINET line, the cost for hardware, cables, and installation space can be reduced.

MRP/MRPD function

PROFINET *1 PROFIsafe *2
*1 MRP/MRPD *2 MRP

MRP (Media Redundancy Protocol) function

Communication can be continued even if one of the communication cables in the network is disconnected or damaged. Furthermore, as it is possible to identify the disconnection point quickly, the network disconnection time can be kept within 200 ms.

* In order to use the MRP function, the PLC must be able to support it.

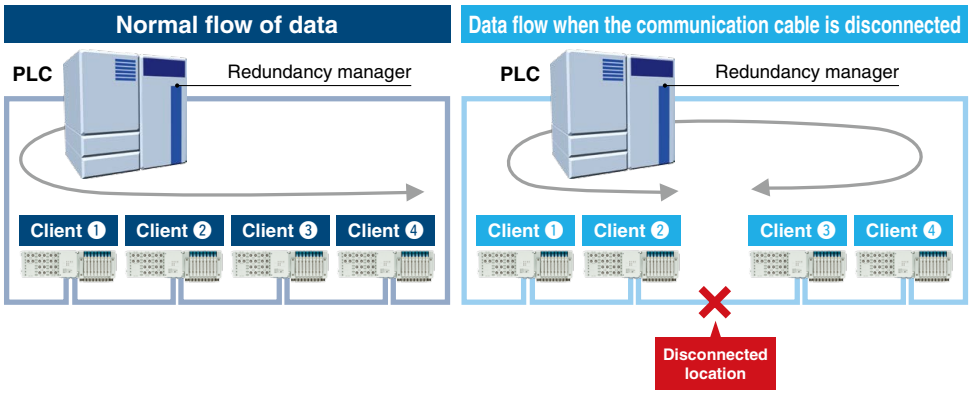

MRPD (Media Redundancy for planned duplication) function

It is possible to duplicate routes with a ring topology configured with PROFINET IRT communication.
Communication reconnection time is faster than with the MRP function, so communication can be continued without recovery time.

NET Load Class Ⅲ compatible

PROFINET

Passed and certified under the highest network load (Class Ⅲ) specified by PROFINET.

Built-in web server function, FW (firmware) updates

PROFINET

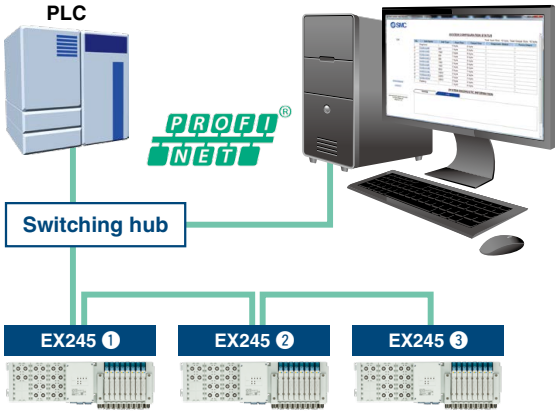

Connection example

All products are accessible via PC.

- FW updates
- Status checks
- Forced outputs, etc.

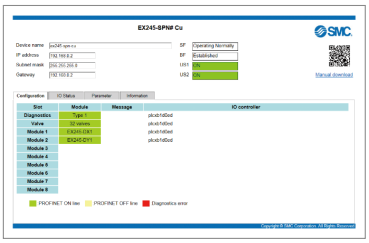

- The status (errors and diagnostic contents) of all products can be checked via web browser.
- Easy operation testing, initial operation checking of equipment, and maintenance without a PLC

FW (firmware) update tool

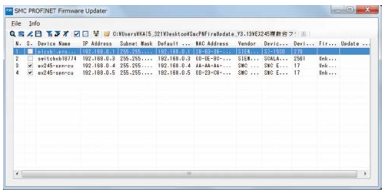

- Batch firmware updating for up to 255 units is possible from the Ethernet line.
- Easy to handle future version upgrades

Dual communication and dual power connectors

PROFINET PROFIsafe

- 2 power connectors and 2 communication connectors are mounted, making daisy-chain connection possible.
- An external branch connector is not necessary. Reduced wiring space
- Loop through current between power connectors: Max. 16 A*1

* The max. allowable current for the 7/8 inch power supply connector is 10 A. The max. loop through current between connectors is 6 A.

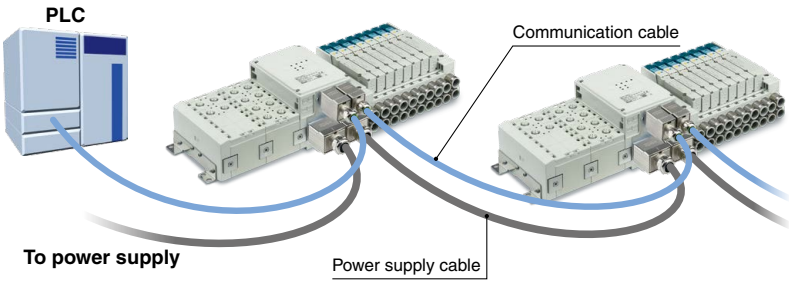

Fast Start Up function

PROFINET

Time from power ON to communication connection:

Approx. 10 s → **0.5 s or less** for the Fast Start Up function

In the case of a tool changer, it takes about 10 seconds for communication to be connected in some products after the power to the device installed on the tool is turned ON.
For products which support the Fast Start Up function, communication can be operational even faster.

∗ In order to use the Fast Start Up function, the PLC must be able to support it.

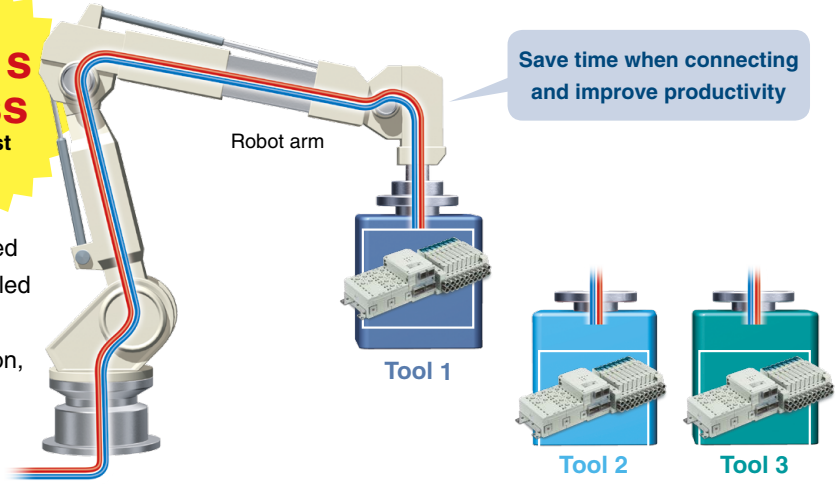

Fiber-optic cable maintenance alarm

PROFINET PROFIsafe

∗ Available for the EX245-SPN1A and the EX245-FPS1

This feature continuously monitors the received light intensity from the fiber-optic cable and reports it to the PLC. Any loss of intensity is an indicator of damage to the cable, so may give a warning before communication is lost. By using preventative maintenance, you can avoid unexpected shutdowns.

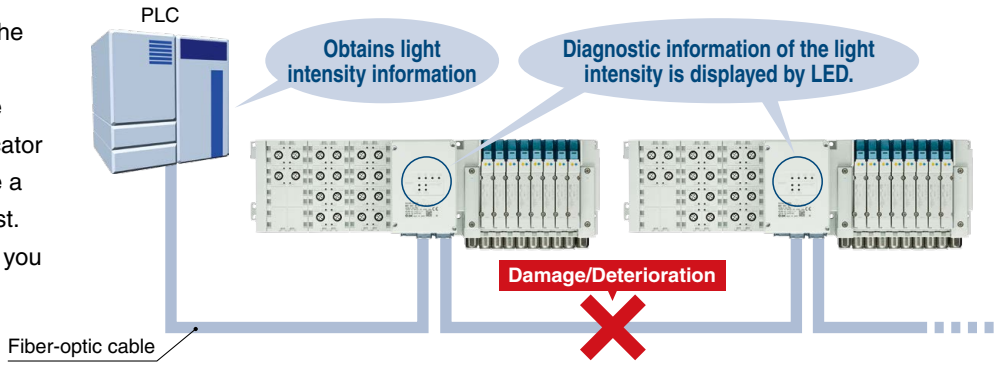

Modules can be combined flexibly.

PROFINET PROFIsafe

- Number of valves, digital inputs/outputs

Solenoid valve	Max. 32 valves
Digital input	Max. 128 inputs
Digital output	Max. 64 outputs

- I/O modules can be connected and removed one by one.
- Up to 8 modules can be connected in any order.

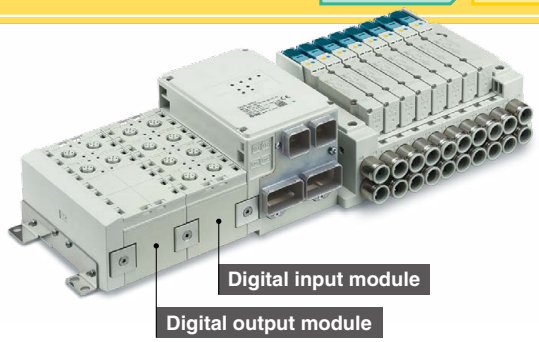

Connectable Valve Series

Series			Flow rate characteristics (4/2 → 5/3) C [dm³/(s·bar)]	b	Max. number of solenoids	Power consumption [W]	Applicable cylinder size
IP65	CE	JSY3000	2.77	0.27	32	0.4 (Standard) 0.1 (With power-saving circuit)	ø50
		JSY5000	6.59	0.22			ø80
IP65	CE	SY3000	1.6	0.19	32	0.35 (Standard) 0.1 (With power-saving circuit)	ø50
		SY5000	3.6	0.17			ø63
IP65	CE	VQC2000	3.2	0.30	24	0.4 (Standard)	ø63
		VQC4000	7.3	0.38		0.95 (Standard) 0.4 (Low-wattage type)	ø160

∗1 For models other than the applicable models, please contact your SMC sales representative.
∗2 The use of validated products may be required for valve manifolds used in the safety-related parts of equipment which is compliant with international standard ISO 13849. For validated products, please contact your SMC sales representative.

Supports safety communication (PROFIsafe)

PROFIsafe

PROFIsafe is established as an international standard (IEC 61784-3-3). It is a communication protocol that transmits safety-related data by PROFINET communication and can be used up until safety standards ISO 13849-1 PL e and IEC 61508/IEC 62061 SIL 3.

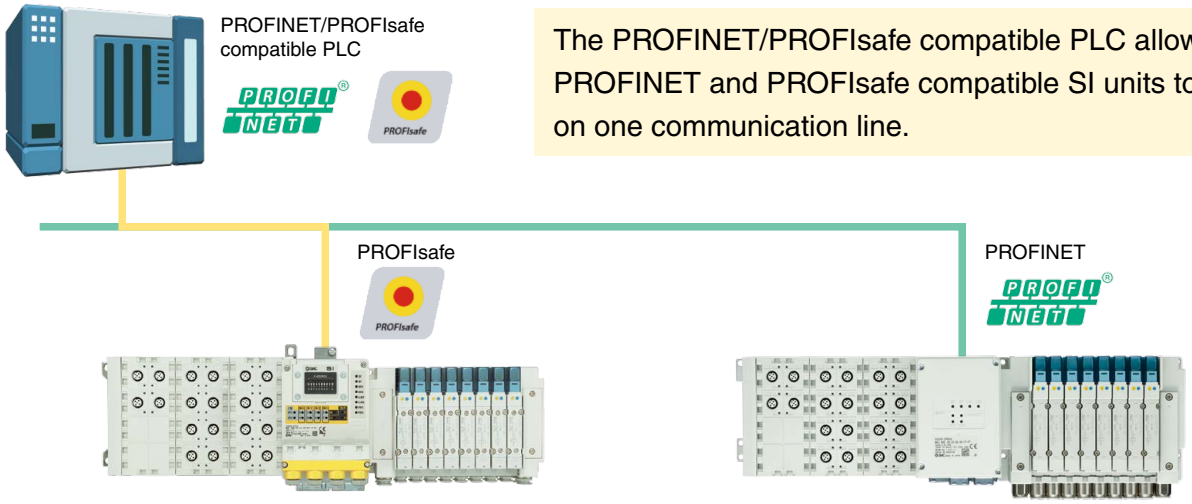

Compliant with safety standards

PROFIsafe

The aim is to facilitate a safe design (featuring ISO/IEC compliance) of the customer's equipment and facilities. The EX245-FPS□ has been certified under the following categories by a third-party organization (TÜV Rheinland).

Product Safety
Functional Safety
TÜVRheinland CERTIFIED
www.tuv.com
ID 0600000000

IEC 61508/IEC 62061 SIL 3
ISO 13849 PL e/Cat. 4

- **SIL (Safety Integrity Level)**
  A safety integrity level as defined by international standard IEC 61508/62061
  There are 4 levels of safety, with the lowest being SIL 1 and the highest being SIL 4.
- **PL (Performance Level)**
  A scale used to define the capability of safety-related parts to perform a safety function as defined by international standard ISO 13849
  There are 5 levels of safety function, with the lowest being PL a and the highest being PL e.

Safety Output

PROFIsafe

The EX245-FPS□ has safety outputs inside the product that can control 3 zones for valves and 1 zone for output modules individually.
When the safety switch is turned OFF by directive from the PLC, the voltage supplied to the valve or output module is shut off, and it switches to safe state.
The safety switch of this product has two redundancies, one on the 24 V side and the other on the 0 V side. It continuously runs diagnostics.
The safety switch is turned OFF in the event of an error detection.

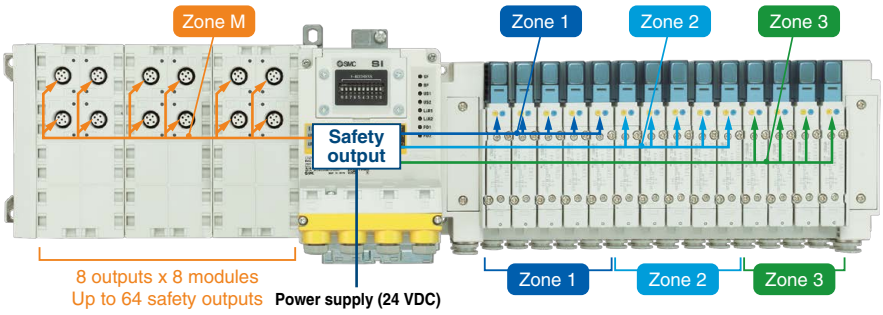

The valve/actuator will not turn ON when the PROFIsafe signal is OFF, even if an ON instruction is given via PROFINET signal. Only when both PROFINET and PROFIsafe instruct the device to turn ON will the valve/actuator turn ON.

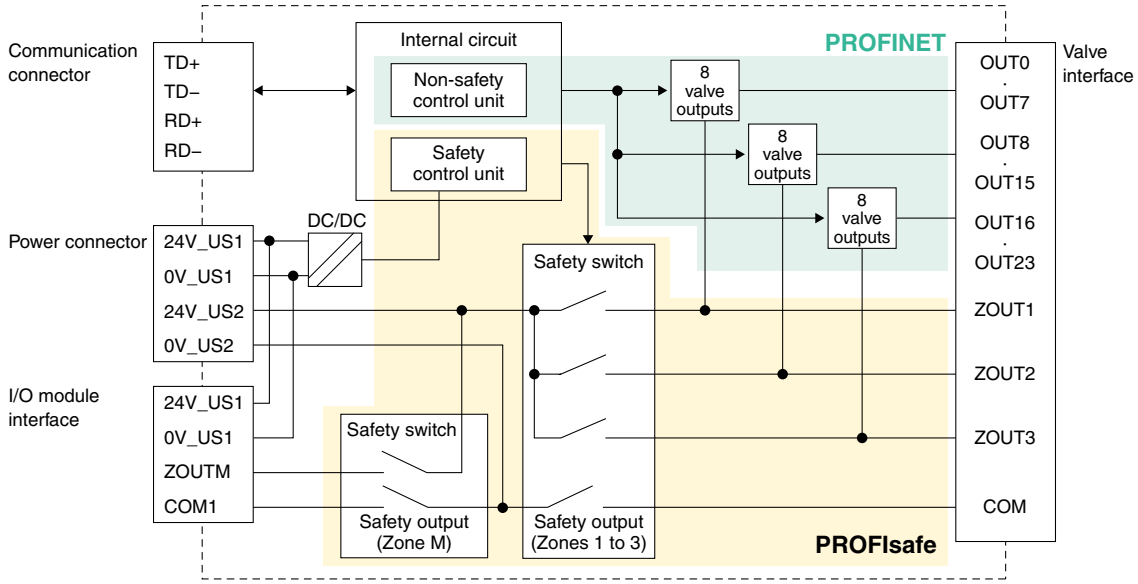

⚠Safety Definition

The safe state of the EX245-FPS□ is a condition in which the safety output described above is turned OFF to shut off the supply of power to the valve manifold.
This product does not cover valve manifolds that are being used in connection with this product or the safety function and safe state of electric/air equipment that includes a peripheral circuit.

Safety Input

PROFIsafe

The EX245-FPS□ is equipped with safety inputs. The safety inputs of this product can connect to components (e.g. laser scanners, light curtains, etc.) that are compatible with the safety inputs.
The safety input can be loaded in 2 ways:

- Single channel (1 out of 1): 8 safety inputs (SIL 2/PL d)
- Dual channel (1 out of 2): 4 safety inputs (SIL 3/PL e)

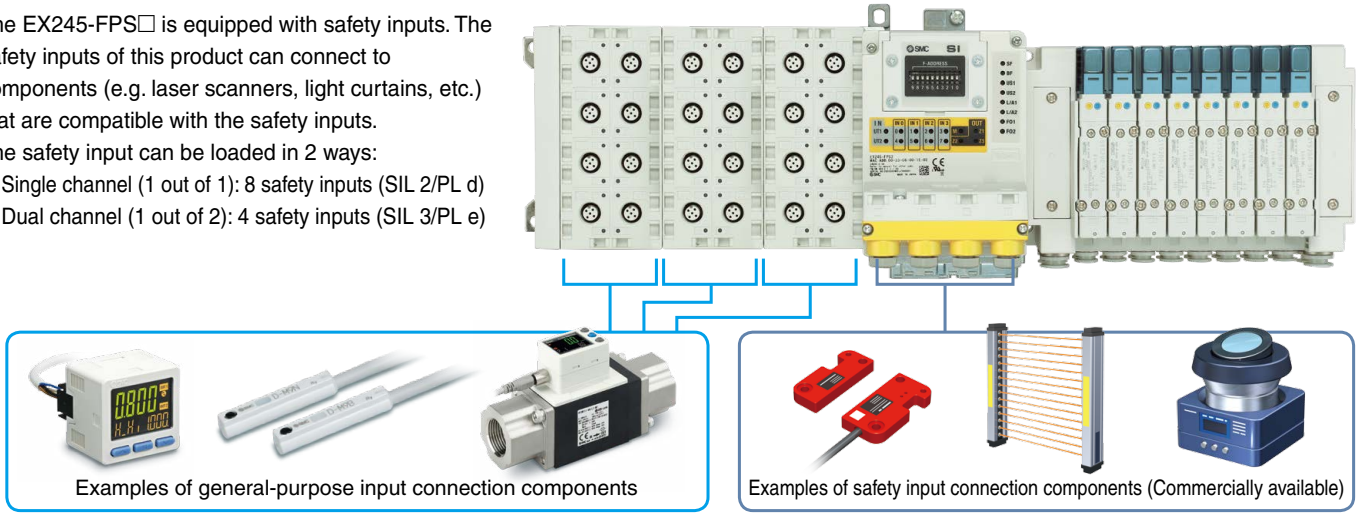
Examples of general-purpose input connection components
Examples of safety input connection components (Commercially available)

Safety Input (PROFIsafe compatible models)

PROFIsafe

When using a PROFIsafe compatible SI unit

- Separate safety input/output units (commercially available) are not required. (Space saving)
- Multi-zone safety outputs can be individually controlled.

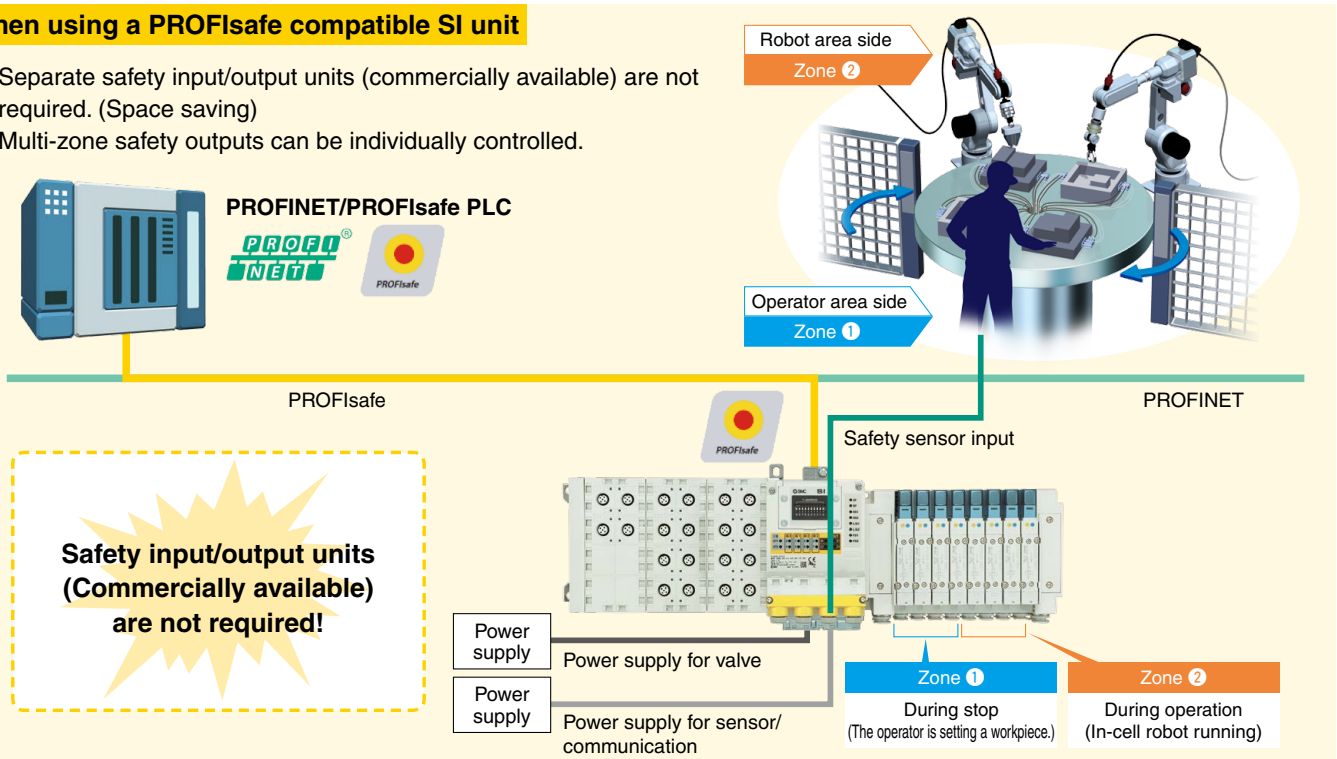

When using a PROFINET compatible SI unit

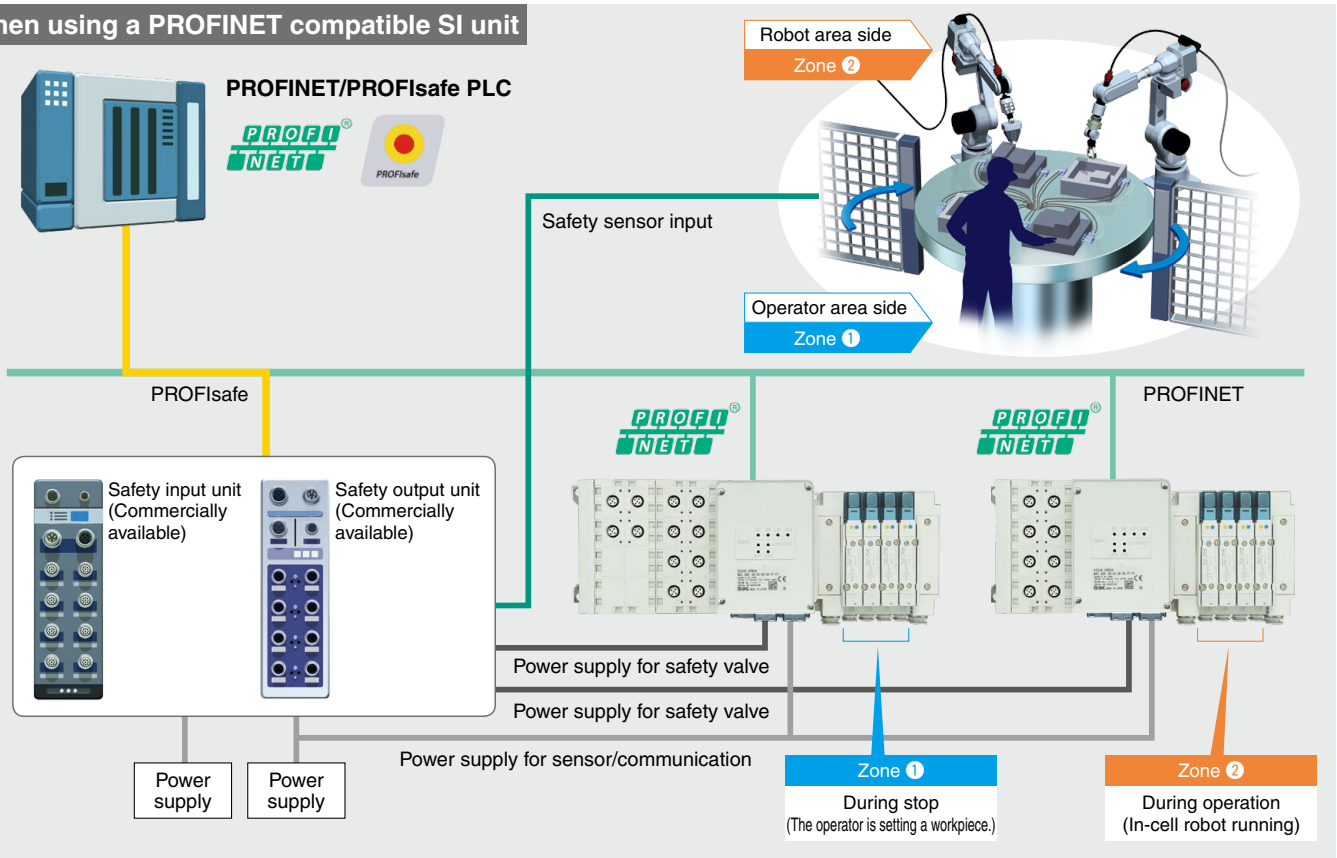

⚠Safety of the machine or system

The manufacturer of the machine/system and its user are responsible for the safety of the machine/system. Use of the EX245-FPS□ requires machine/system safety concepts which are in accordance with the corresponding directives and standards, safety function validation, and hazard and risk analysis. Target SILs (IEC 61508/62061 compliance) and performance levels/categories (ISO 13849 compliance) are determined based on the risk analysis. For more information, refer to the "Safety of the machine or system" section in the operation manual of the EX245-FPS□.

CONTENTS

Fieldbus System (For Input/Output)
EX245 Series

SPN1A (SCRJ)

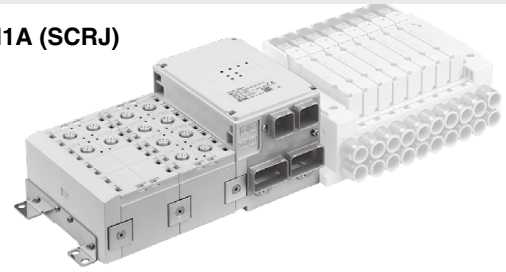

SPN2A (RJ45)

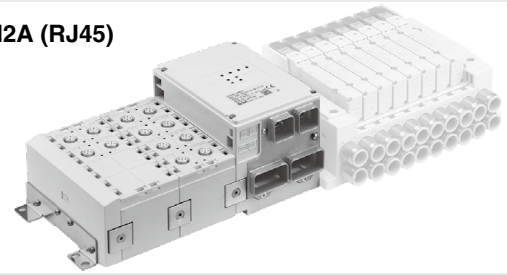

SPN3A (M12)

FPS1 (SCRJ)

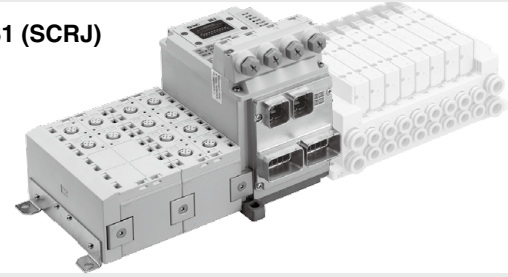

FPS2 (RJ45)

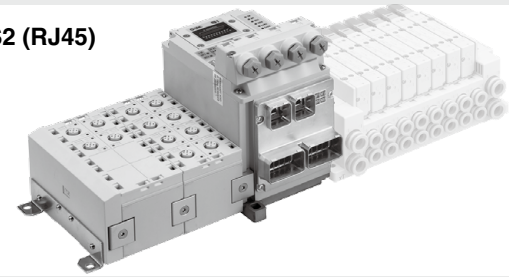

FPS3 (M12)

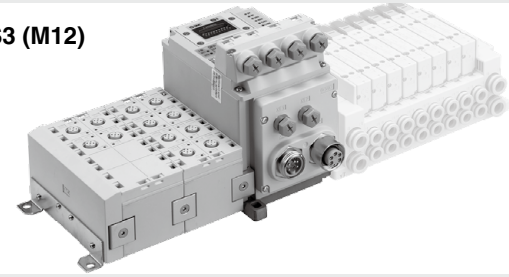

Fieldbus System For Input/Output
EX245 Series

IP65

Construction

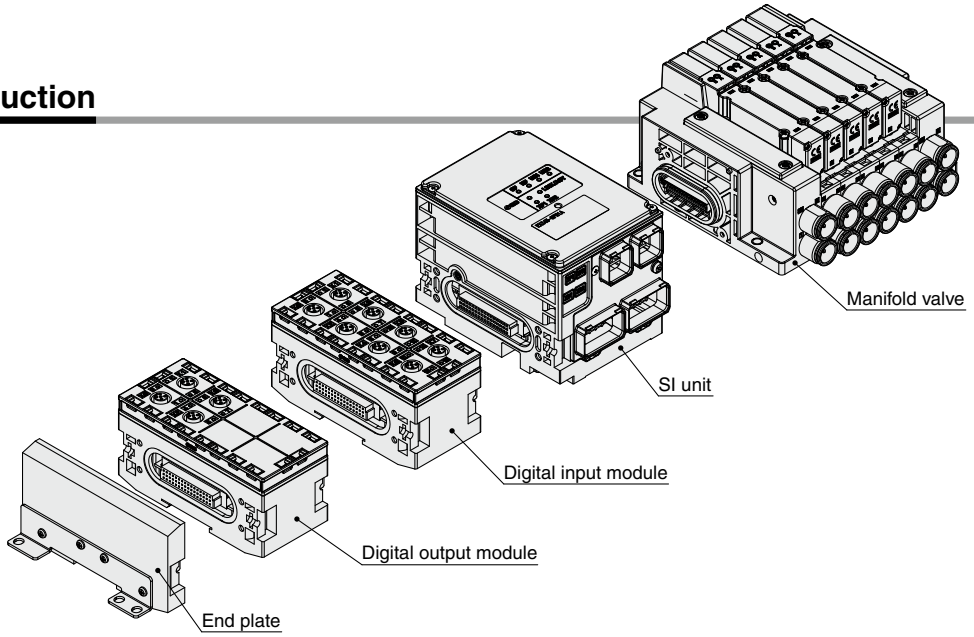

How to Order

SI Unit

EX245 – SPN1A


EX245-SPN1A


EX245-SPN2A


EX245-SPN3A


EX245-FPS1


EX245-FPS2


EX245-FPS3

Connector type

Symbol	Protocol	Communication connector	Power supply connector
SPN1A	PROFINET	Push Pull connector (SCRJ): 2 pcs.	Push Pull connector (24 V): 2 pcs.
SPN2A		Push Pull connector (RJ45): 2 pcs.	Push Pull connector (24 V): 2 pcs.
SPN3A		M12 connector (4-pin, Socket, D-coded): 2 pcs.	7/8 inch connector (5-pin, Plug): 1 pc. 7/8 inch connector (5-pin, Socket): 1 pc.
FPS1	PROFIsafe	Push Pull connector (SCRJ): 2 pcs.	Push Pull connector (24 V): 2 pcs.
FPS2		Push Pull connector (RJ45): 2 pcs.	Push Pull connector (24 V): 2 pcs.
FPS3		M12 connector (4-pin, Socket, D-coded): 2 pcs.	7/8 inch connector (5-pin, Plug): 1 pc. 7/8 inch connector (5-pin, Socket): 1 pc.

Digital Input Module

EX245 – DX1

Digital input module specification

DX1	Digital input (16 inputs)

Digital Output Module

EX245 – DY1

Digital output module specification

DY1	Digital output (8 outputs)

End Plate

EX245 – EA2 – 1

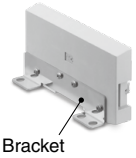

For JSY/SY

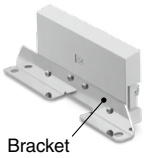

For VQC

Bracket

1	General-purpose
2	Without bracket
3	For JSY/SY (Only for EX245-SPN□A)
4	For VQC4000 (Only for EX245-SPN□A)
5	For VQC2000 (Only for EX245-SPN□A)

∗ For the EX245-EA2-3/4/5, only the EX245-SPN□A can be connected. The bracket is adjusted according to the mounting hole pitch of the manifold valves.

∗ Refer to the **Web Catalog** for manifold valve part numbers.
If you are considering using a manifold valve compatible with PROFIsafe, be sure to check with your SMC sales representative prior to ordering.

Specifications

Common Specifications for All Units/Modules

Item	Specifications
Operating temperature range	Operating: –10 to 50°C, Stored: –20 to 60°C (No condensation)
Operating humidity range	Operating, Stored: 35 to 85% RH (No condensation)
Withstand voltage	500 VAC for 1 minute between external terminals and FE
Insulation resistance	500 VDC, 10 MΩ or more between external terminals and FE
Enclosure	IP65 (Manifold assembly, With seal cap)
Standards	CE marking (EMC directive/RoHS directive), UL (CSA)

SI Unit Specifications

Model			EX245-SPN1A	EX245-SPN2A	EX245-SPN3A
Communication	**Protocol**		PROFINET		
	Device type		PROFINET IO		
	Communication speed		100 Mbps full duplex		
	Configuration file∗1		GSD file		
	Applicable function		MRP function, MRPD function, Fast Start Up function, Shared Device function, PROFIenergy function, Web server function, FW update function, Conformance Class C, NET Load Class Ⅲ		
			Fiber-optic cable maintenance alarm	—	
Electrical	**Internal current consumption (US1)**		300 mA or less	200 mA or less	
	Loop through current between power connectors		16 A		6 A
	Operating voltage/ Max. current	**US1**	24 VDC +20%, –15%/6 A		
		US2	24 VDC +20%, –15%/4 A		
Output	**Output type**		Source/PNP (Negative common)		
	Number of outputs		32 outputs		
	Load		Solenoid valve with surge voltage suppressor of 24 VDC, 1 W or less (SMC)		
	Power supply		24 VDC, 2 A		
	Protection		Short-circuit protection		
General	**Max. number of modules**		8		
	Max. number of digital inputs		128		
	Max. number of digital outputs		64		
	Weight		465 g		540 g

∗1 The configuration file can be downloaded from the SMC website.

EX245-SPN1A

EX245-SPN2A

EX245-SPN3A

Model			EX245-FPS1	EX245-FPS2	EX245-FPS3
Communication	**Protocol**		PROFINET, PROFIsafe		
	Device type		PROFINET IO		
	Communication speed		100 Mbps full duplex		
	Applicable function		MRP function, Conformance Class C, NET Load Class Ⅰ		
			Fiber-optic cable maintenance alarm	—	
Electrical	**Internal current consumption (US1)**		350 mA or less	300 mA or less	
	Loop through current between power connectors		16 A		10 A
	Operating voltage/ Max. current	**US1**	24 VDC +20%/–15%, 6 A		
		US2	24 VDC +20%/–15%, 4 A (Excludes valves)		
Safety input	**Number of inputs**		Dual channel: 4 inputs, Single channel: 8 inputs		
	External supply voltage		24 VDC +20%/–15%		
	Max. supply current		UT1: 2 A, UT2: 1 A		
	Cross-circuit detection		Yes		
	Over current/Short-circuit detection function		Yes		
	Input type		PNP		
	ON voltage		11 to 30 V		
	OFF voltage		–3 to 5 V		
	Input current (at 24 VDC)		Typ. 3.8 mA		
	Input characteristics		Type 3 (IEC 61331)		
Safety output	**Number of safety outputs**	**Valve side**	3 zones		
		Module side	1 zone		
	Max. current	**Valve side**	1.5 A (Total of 3 zones)		
		Module side	4 A		
	Short-circuit protection		Yes		
	Power supply source		US2		
Output	**Output type**		PNP		
	Number of outputs		8 outputs/zone, Total of 24 outputs		
	Load		Solenoid valve with surge voltage suppressor of 24 VDC, 1 W or less (SMC)		
	Protection		Short-circuit protection		
	Power supply		24 VDC, 1.5 A		
General	**Max. number of modules**		8		
	Max. number of digital inputs		128		
	Max. number of digital outputs		64		
	Weight		1,100 g		1,200 g

∗ The configuration file can be downloaded from the SMC website.

EX245-FPS1

EX245-FPS2

EX245-FPS3

EX245-FPS□ Manifold Wiring Specifications

Manifold wiring example

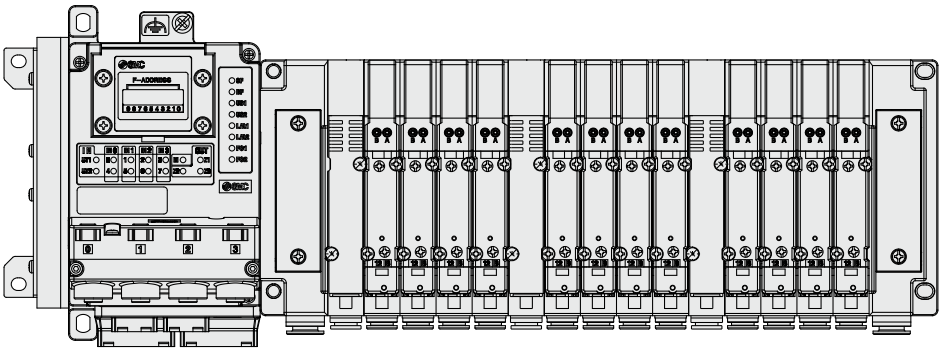

Pin no.	Valve zone	Signal name	Function
1	Common	M OUT1	Common 0 V
2			
3	Zone 1	Z OUT1	Zone 1: Safety output
4		SOL0	Output 0 (Output is available only when Zone 1 is turned ON.)
⋮		⋮	⋮
11		SOL7	Output 7 (Output is available only when Zone 1 is turned ON.)
12	Zone 2	Z OUT2	Zone 2: Safety output
13		SOL8	Output 8 (Output is available only when Zone 2 is turned ON.)
⋮		⋮	⋮
20		SOL15	Output 15 (Output is available only when Zone 2 is turned ON.)
21	Zone 3	Z OUT3	Zone 3: Safety output
22		SOL16	Output 16 (Output is available only when Zone 3 is turned ON.)
⋮		⋮	⋮
29		SOL23	Output 23 (Output is available only when Zone 3 is turned ON.)

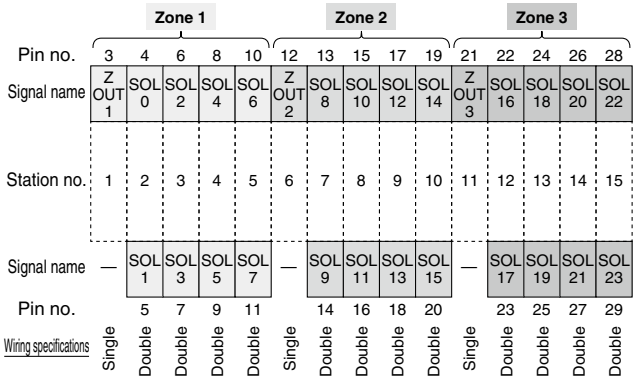

(Example) The stations corresponding to the safety outputs (Z OUT n) are configured by single wiring.

Specifications

EX245-DX1

Digital Input Module

Model		EX245-DX1
Input	Input type	PNP
	Input connector	M12 (5-pin) socket*1
	Number of inputs	16 inputs
	Supplied voltage	24 VDC
	Max. supplied current	0.5 A/Connector, 2 A/Module
	Protection	Short-circuit protection
	Input current (at 24 VDC)	Typ. 4.5 mA
	ON voltage	11 to 30 V
	OFF voltage	–3 to 5 V
Internal current consumption		50 mA or less
Weight		280 g

*1 An M12 (4-pin) connector can also be connected.

EX245-DY1

Digital Output Module

Model		EX245-DY1
Output	Output type	PNP
	Output connector	M12 (5-pin) socket*1
	Number of outputs	8 outputs
	Supplied voltage	24 VDC
	Max. load current	0.5 A/Output, 2 A/Module
	Protection	Short-circuit protection
Current consumption		50 mA or less
Weight		280 g

*1 An M12 (4-pin) connector can also be connected.

For JSY/SY **For VQC**

EX245-EA2-□

End Plate

Model	EX245-EA2-1	EX245-EA2-2	EX245-EA2-3	EX245-EA2-4	EX245-EA2-5
Bracket	Yes	No	Yes	Yes	Yes
Weight	120 g	80 g	120 g	150 g	120 g
Note	General-purpose	—	Mounting hole for JSY/SY	Mounting hole for VQC4000	Mounting hole for VQC2000

* For the EX245-EA2-3/4/5, only the EX245-SPN□A can be connected. The bracket is adjusted according to the mounting hole pitch of the manifold valves.

Dimensions/Parts Description

SI Unit

EX245-SPN1A/2A

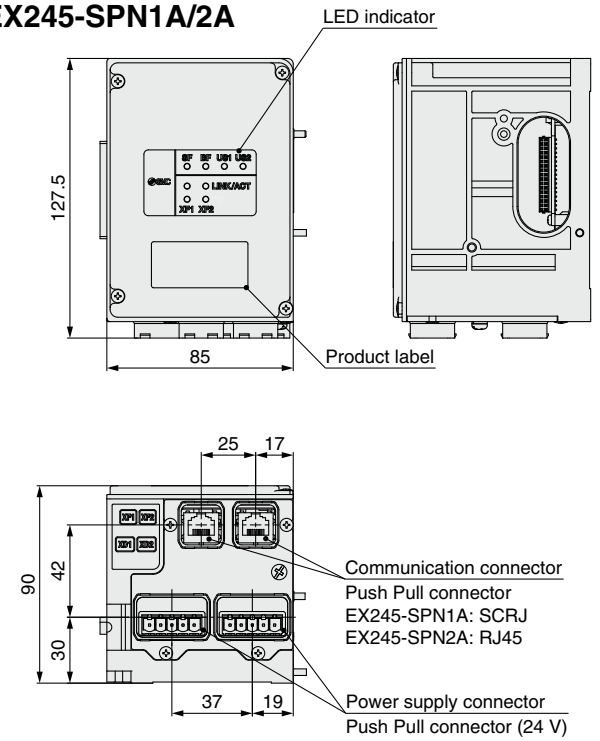

EX245-SPN3A

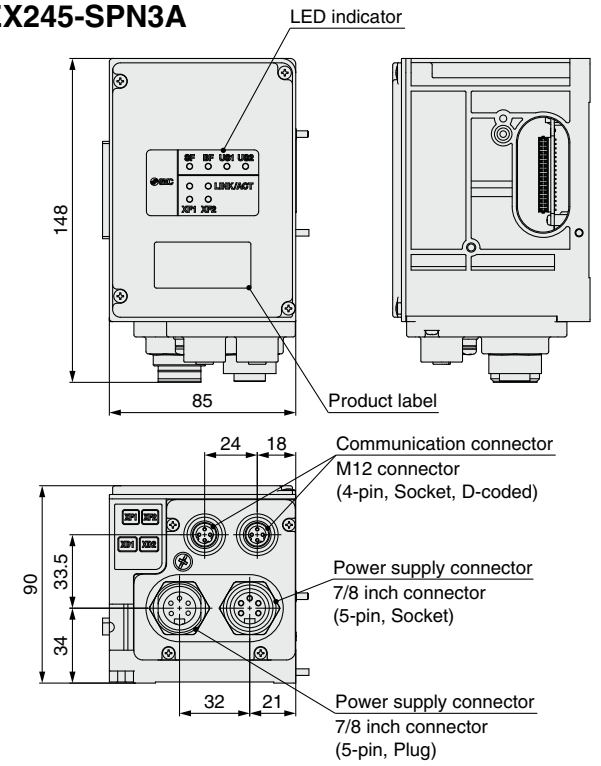

EX245-FPS1/2

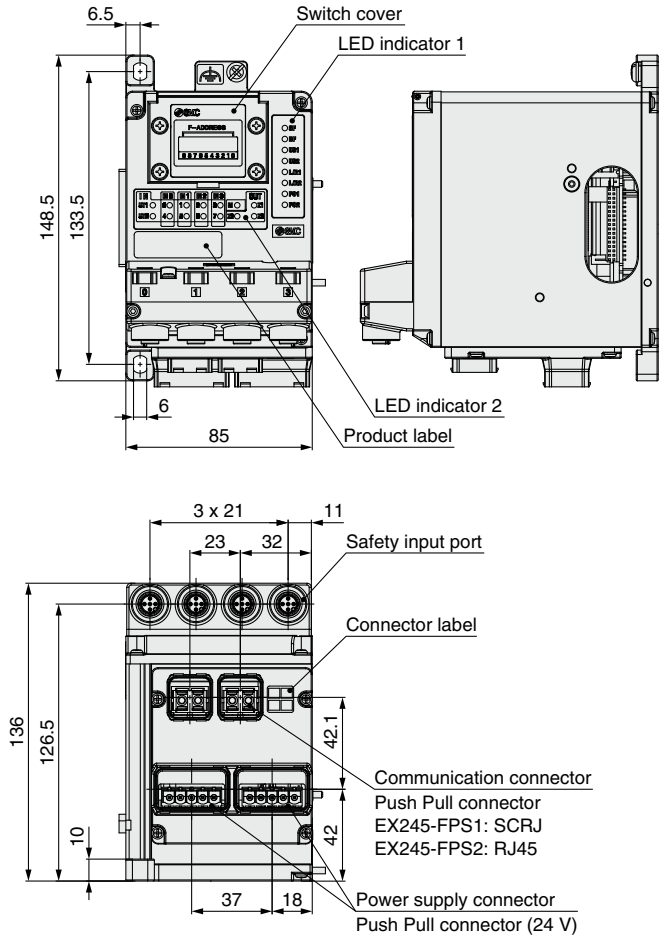

EX245-FPS3

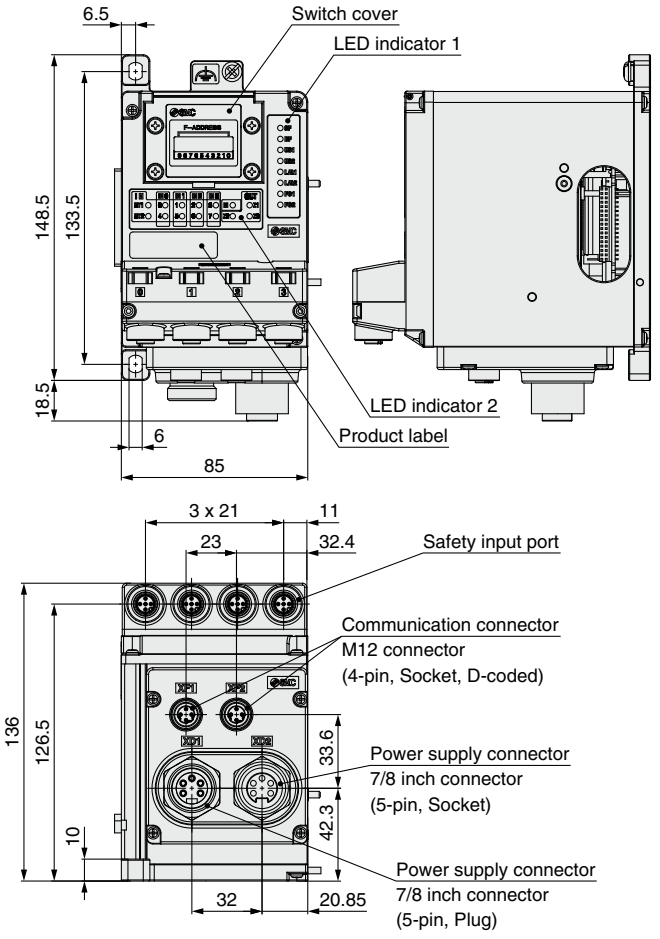

Dimensions/Parts Description

Digital Input Module

EX245-DX1

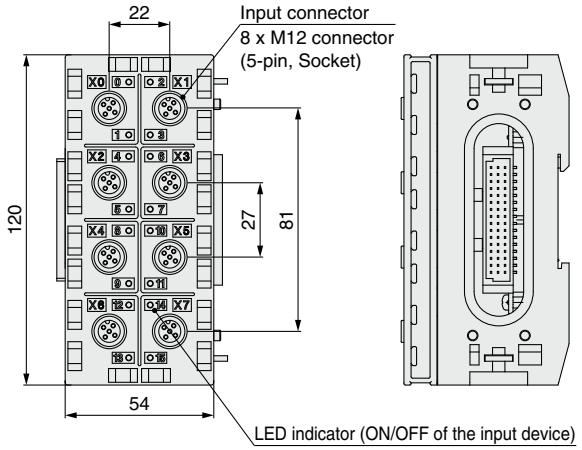

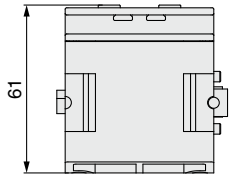

Digital Output Module

EX245-DY1

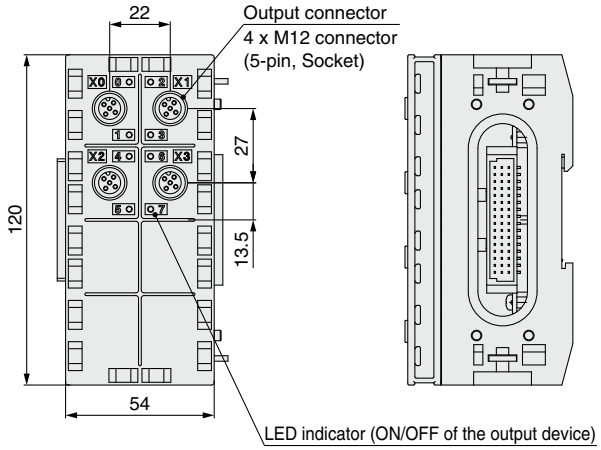

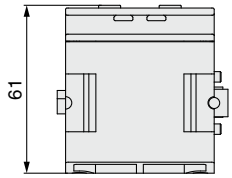

Dimensions/Parts Description

End Plate

EX245-EA2-1

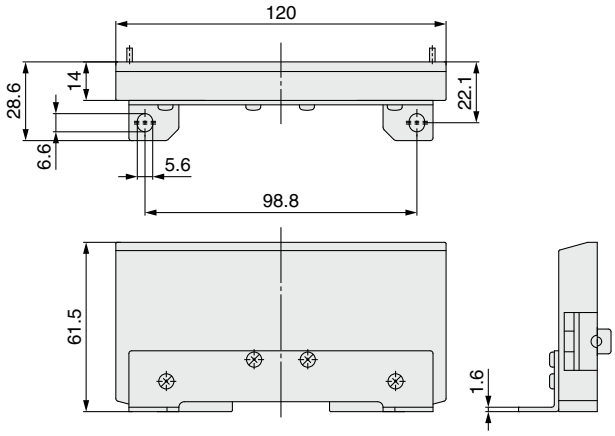

EX245-EA2-2

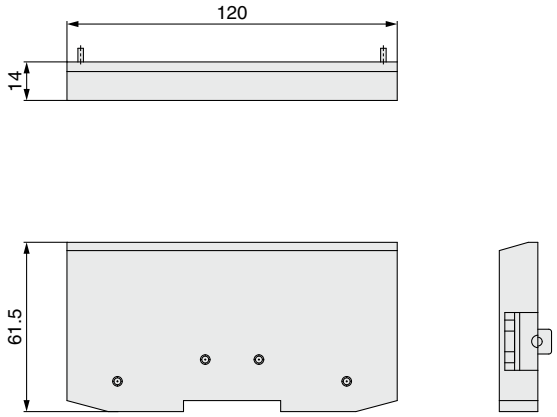

EX245-EA2-3 (For JSY/SY)

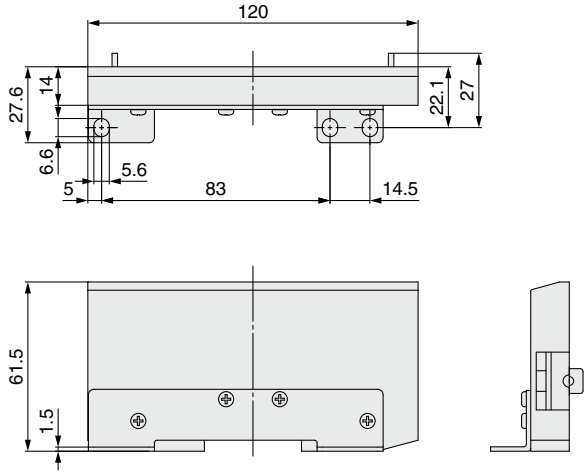

EX245-EA2-4 (For VQC4000)

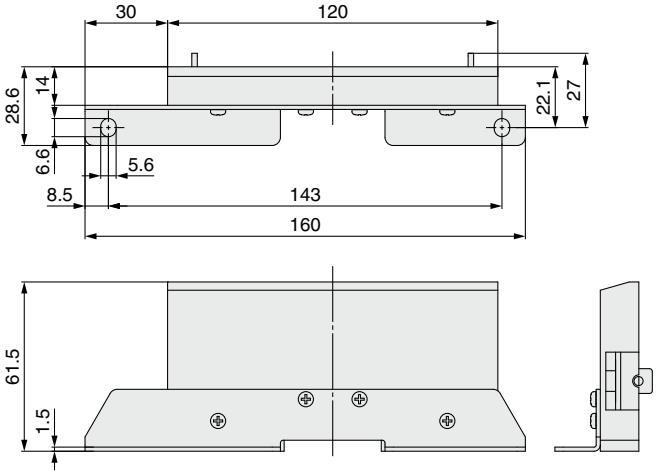

EX245-EA2-5 (For VQC2000)

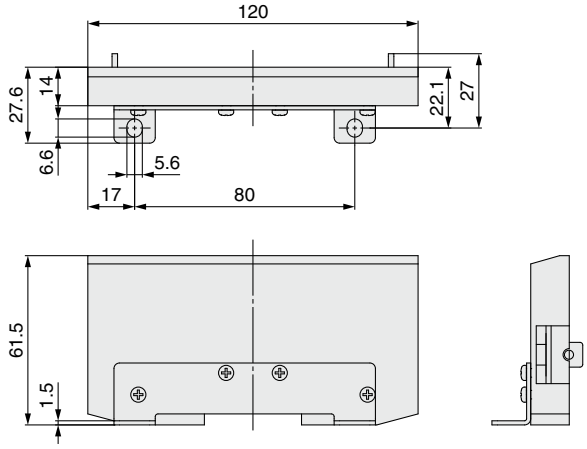

Assembly Examples

Manifold valve
SI unit ——————— EX245-SPN1A
Digital input module ——— EX245-DX1
Digital output module ——— EX245-DY1
End plate ——————— EX245-EA2-3

∗ If you are considering using a manifold valve compatible with PROFIsafe, be sure to check with your SMC sales representative prior to ordering.

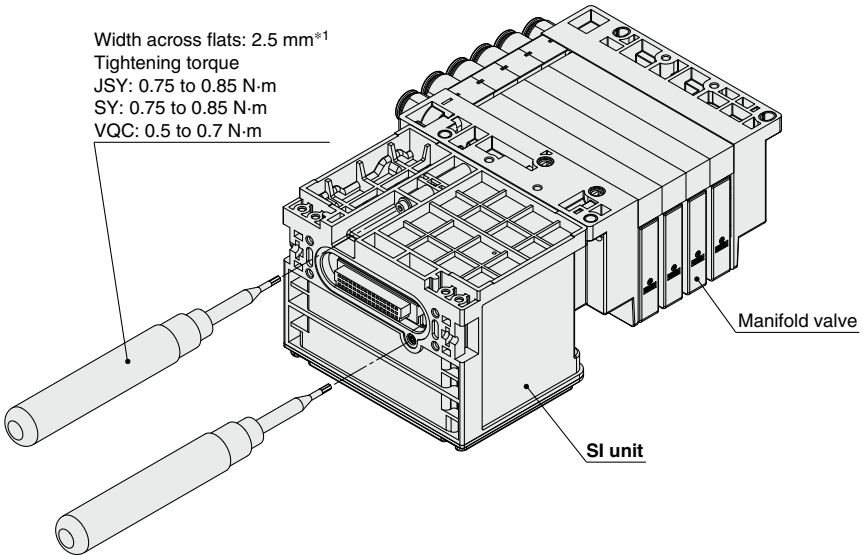

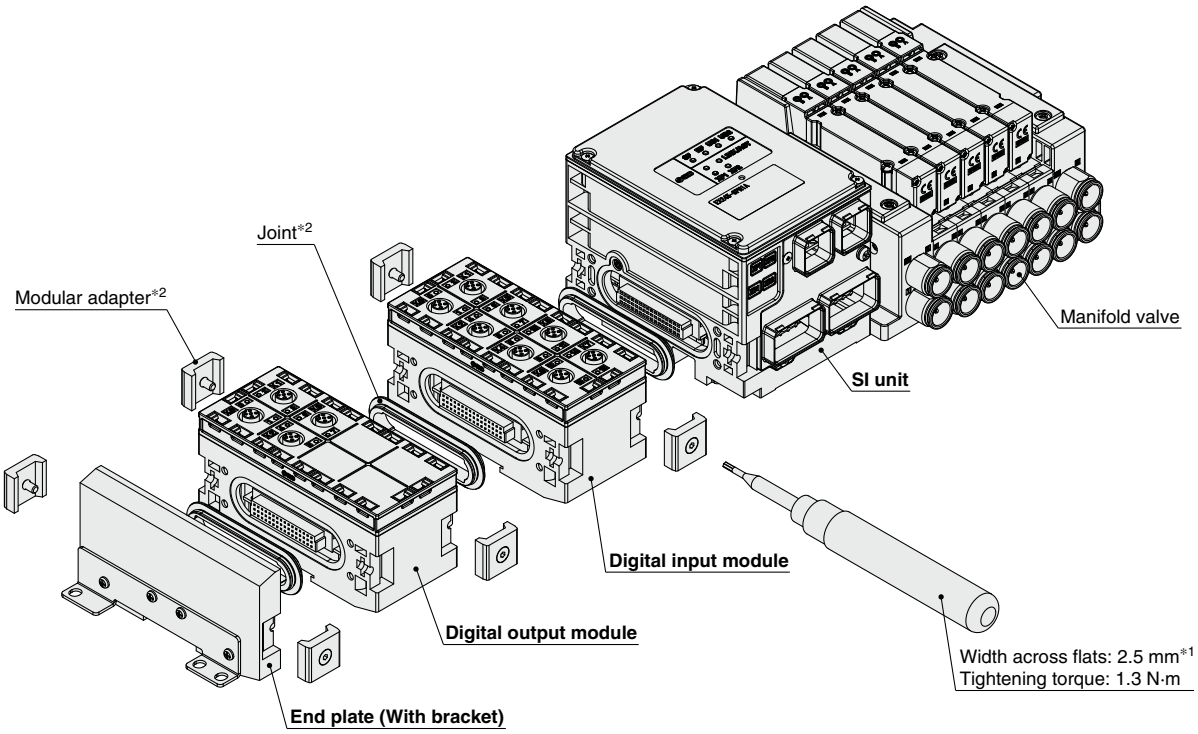

∗1 A tightening tool is not included. It should be provided by the customer.
∗2 The joint and modular adapter are shipped together with the digital input/output modules and end plate.

EX245 Series
Accessories

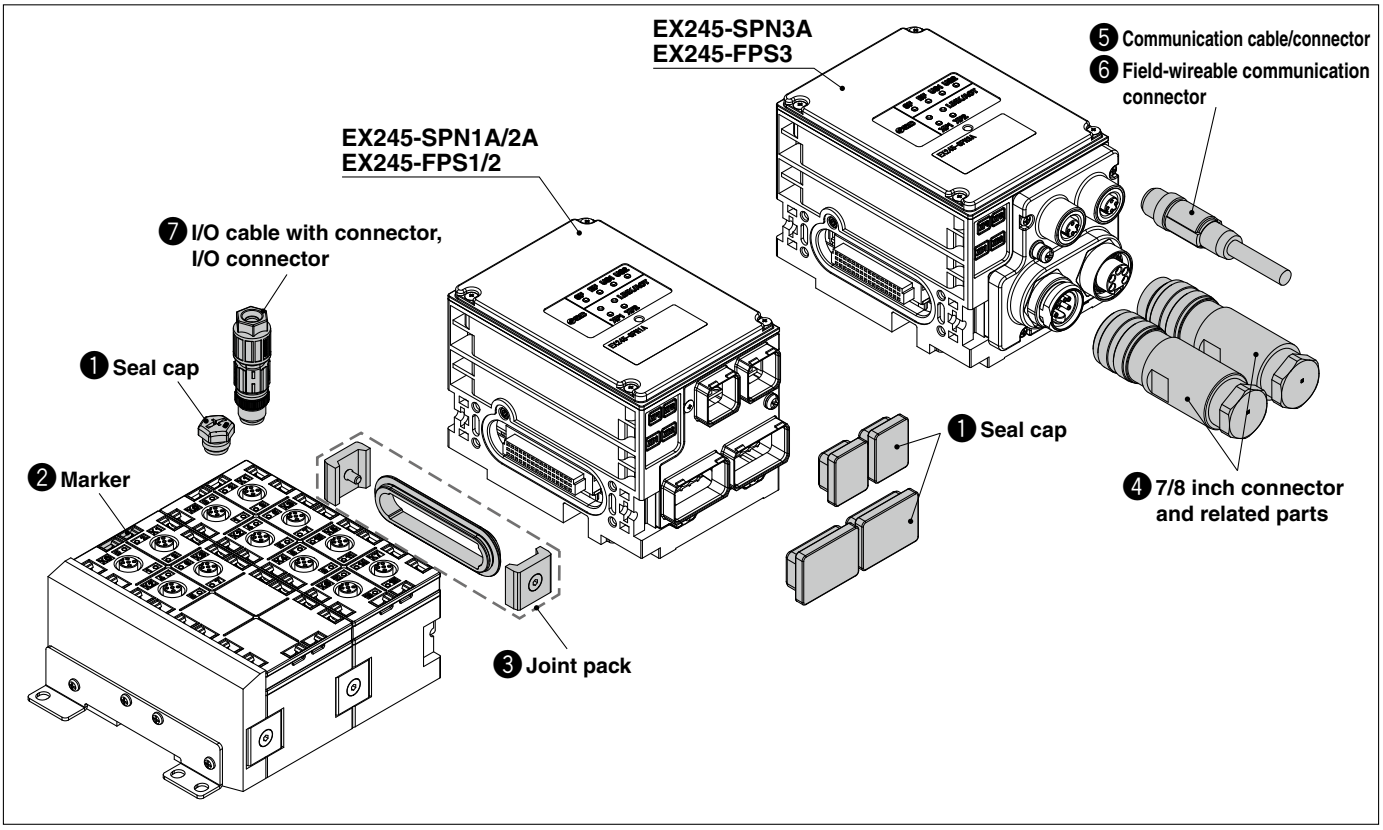

❶ Seal Cap (10 pcs.)

Be sure to mount a seal cap on any unused I/O connectors. Otherwise, the specified enclosure cannot be maintained.

EX9-AWTS
For M12 (10 pcs.)

EX245-AWC
For communication connectors (10 pcs.)

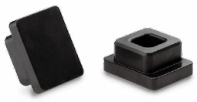

EX245-AWP
For power supply connectors (10 pcs.)

Seal cap for communication connector and power supply connector are included when **EX245-SPN1A/2A or FPS1/2** is shipped (2 caps for each unit).

❷ Marker (1 sheet, 88 pcs.)

The signal name of I/O device and each module name can be entered and mounted on each module.

EX600-ZT1

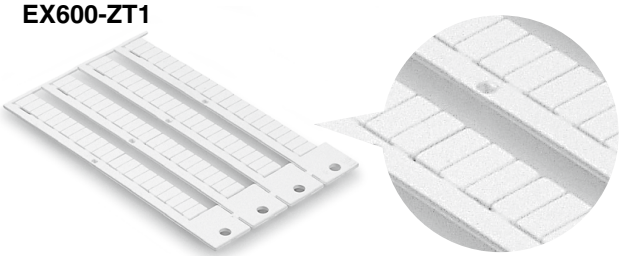

❸ Joint Pack

EX245-ZJP

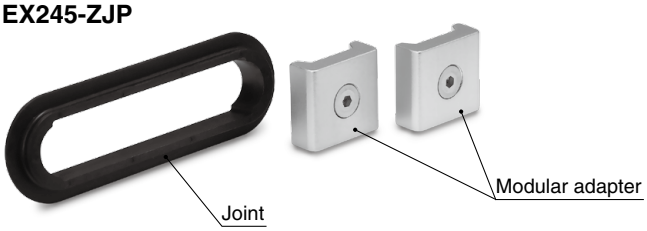

Included when **EX245-DX1/DY1**, **EA2-□** are shipped.

❹ 7/8 Inch Connector and Related Parts

- **Power supply cable (7/8 inch connector)**

PCA-1558810	Straight 2 m
PCA-1558823	Straight 6 m

- **Power supply field-wireable connector (7/8 inch)**
  [Compatible with AWG22-16]

PCA-1578078	Plug
PCA-1578081	Socket

❺ Communication Cable/Connector

EX9-AC 005 EN-PSPS (With connector on both sides (Plug/Plug))

Cable length (L)

005	500 mm
010	1000 mm
020	2000 mm
030	3000 mm
050	5000 mm
100	10000 mm

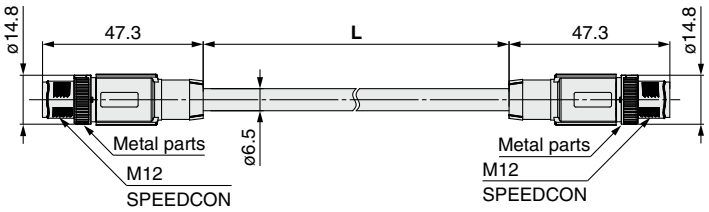

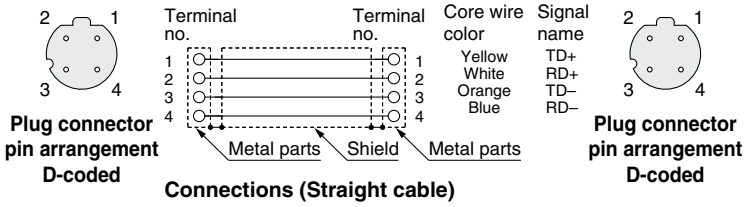

Connections (Straight cable)

Item	Specifications
Cable O.D.	ø6.5 mm
Conductor nominal cross section	0.34 mm²/AWG22
Wire O.D. (Including insulator)	1.55 mm
Min. bending radius (Fixed)	19.5 mm

EX9-AC 005 EN-PAPA (With angled connector on both sides (Plug/Plug))

Cable length (L)

005	500 mm
010	1000 mm
020	2000 mm
030	3000 mm
050	5000 mm
100	10000 mm

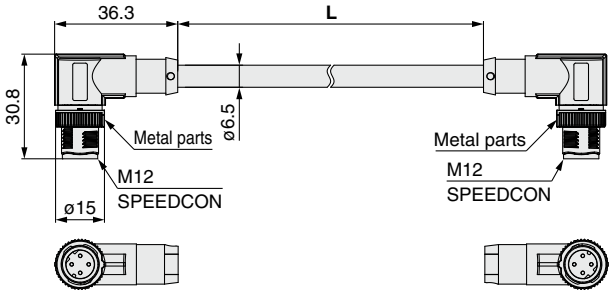

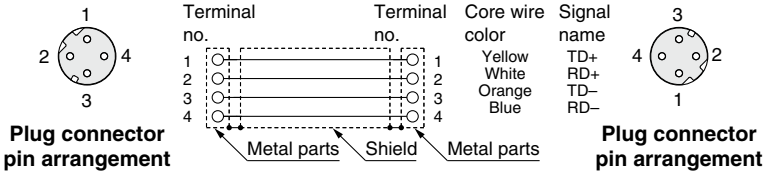

Connections (Straight cable)

Item	Specifications
Cable O.D.	ø6.5 mm
Conductor nominal cross section	0.34 mm²/AWG22
Wire O.D. (Including insulator)	1.55 mm
Min. bending radius (Fixed)	19.5 mm

PCA-1446566 (Plug)

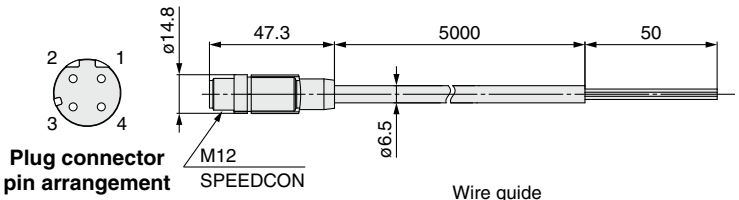

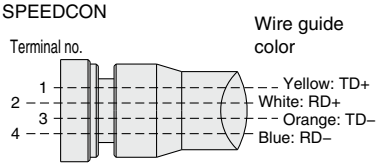

Connections

Item	Specifications
Cable O.D.	ø6.5 mm
Conductor nominal cross section	AWG22
Wire O.D. (Including insulator)	1.55 mm
Min. bending radius (Fixed)	45.5 mm

❺ Communication Cable/Connector

EX9-AC 020 EN-PSRJ (Plug/RJ-45 connector)

Cable length (L)

010	1000 mm
020	2000 mm
030	3000 mm
050	5000 mm
100	10000 mm

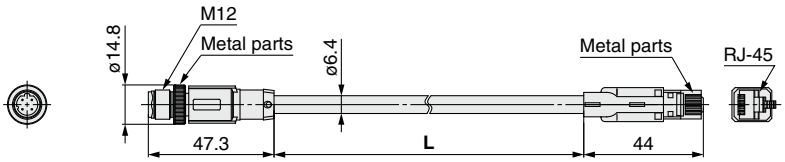

Plug connector pin arrangement D-coded

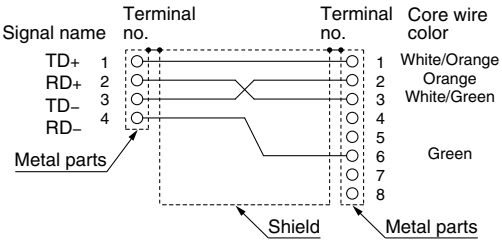

Connections (Straight cable)

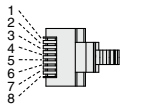

Plug connector pin arrangement

Item	Specifications
Cable O.D.	ø6.4 mm
Conductor nominal cross section	0.14 mm²/AWG26
Wire O.D. (Including insulator)	0.98 mm
Min. bending radius (Fixed)	26 mm

❻ Field-wireable Communication Connector

PCA-1446553

D-coded

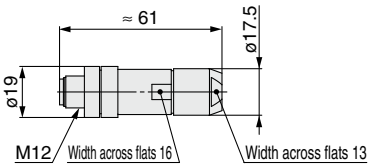

Applicable Cable

Item	Specifications
Cable O.D.	4.0 to 8.0 mm
Wire gauge (Stranded wire cross section)	0.14 to 0.34 mm²/AWG26 to 22

∗ The table above shows the specifications for the applicable cable. Adaptation for the connector may vary on account of the conductor construction of the electric wire.

❼ I/O Cable with Connector, I/O Connector

Name	Use	Part no.	Description
Cable with connector	For sensor 	**PCA-1557769**	Cable with M12 connector (4 pins/3 m)
		PCA-1557772	Cable with M8 connector (3 pins/3 m)
Field-wireable connector	For sensor 	**PCA-1557730**	Field-wireable connector (M8/3 pins/Plug/Piercecon® connection)
		PCA-1557743	Field-wireable connector (M12/4 pins/Plug/QUICKON-ONE connection/SPEEDCON)
		PCA-1557756	
Y connector	For sensor 	**PCA-1557785**	Y connector (2 x M12 (5 pins)-M12 (5 pins)/SPEEDCON)
		PCA-1557798	Y connector (2 x M8 (3 pins)-M12 (4 pins)/SPEEDCON)

∗ When using the Y connector, connect it to the connector on the I/O module through the sensor cable with the M12 connector (PCA-1557769).

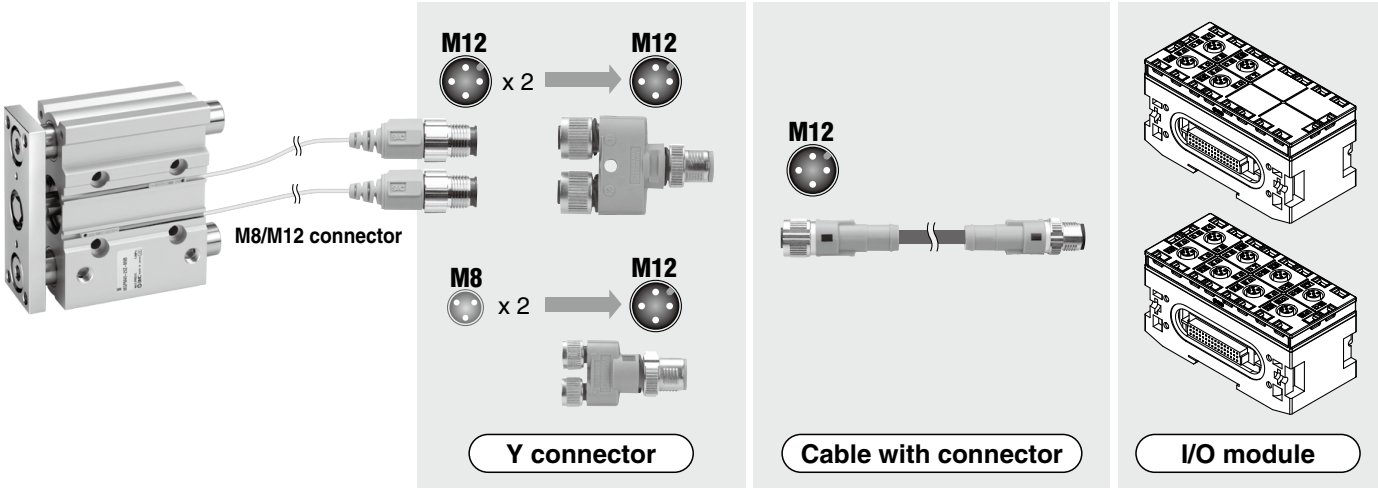

EX245 Series
Specific Product Precautions

Be sure to read this before handling the products. Refer to the back cover for safety instructions. For fieldbus system precautions, refer to the "Operation Manual" on the SMC website.

Operating Environment

⚠ Caution

1. Select the proper type of enclosure according to the operating environment.

IP65 is achieved when the following conditions are met.

1) Provide appropriate wiring of the electrical wiring cables, communication connectors, and cables with M12 connectors.
2) Appropriately mount the SI unit, each module, and the manifold valve.
3) Be sure to mount a seal cap on any unused connectors.

If using in an environment that is exposed to water splashes, please take measures such as using a cover.

⚠ Safety Instructions

These safety instructions are intended to prevent hazardous situations and/or equipment damage. These instructions indicate the level of potential hazard with the labels of **"Caution," "Warning"** or **"Danger."** They are all important notes for safety and must be followed in addition to International Standards (ISO/IEC)*1), and other safety regulations.

⚠ Caution: **Caution** indicates a hazard with a low level of risk which, if not avoided, could result in minor or moderate injury.

⚠ Warning: **Warning** indicates a hazard with a medium level of risk which, if not avoided, could result in death or serious injury.

⚠ Danger : **Danger** indicates a hazard with a high level of risk which, if not avoided, will result in death or serious injury.

*1) ISO 4414: Pneumatic fluid power – General rules relating to systems.
ISO 4413: Hydraulic fluid power – General rules relating to systems.
IEC 60204-1: Safety of machinery – Electrical equipment of machines. (Part 1: General requirements)
ISO 10218-1: Manipulating industrial robots – Safety.
etc.

⚠ Warning

1. The compatibility of the product is the responsibility of the person who designs the equipment or decides its specifications.

Since the product specified here is used under various operating conditions, its compatibility with specific equipment must be decided by the person who designs the equipment or decides its specifications based on necessary analysis and test results. The expected performance and safety assurance of the equipment will be the responsibility of the person who has determined its compatibility with the product. This person should also continuously review all specifications of the product referring to its latest catalog information, with a view to giving due consideration to any possibility of equipment failure when configuring the equipment.

2. Only personnel with appropriate training should operate machinery and equipment.

The product specified here may become unsafe if handled incorrectly. The assembly, operation and maintenance of machines or equipment including our products must be performed by an operator who is appropriately trained and experienced.

3. Do not service or attempt to remove product and machinery/equipment until safety is confirmed.

1. The inspection and maintenance of machinery/equipment should only be performed after measures to prevent falling or runaway of the driven objects have been confirmed.
2. When the product is to be removed, confirm that the safety measures as mentioned above are implemented and the power from any appropriate source is cut, and read and understand the specific product precautions of all relevant products carefully.
3. Before machinery/equipment is restarted, take measures to prevent unexpected operation and malfunction.

4. Contact SMC beforehand and take special consideration of safety measures if the product is to be used in any of the following conditions.

1. Conditions and environments outside of the given specifications, or use outdoors or in a place exposed to direct sunlight.
2. Installation on equipment in conjunction with atomic energy, railways, air navigation, space, shipping, vehicles, military, medical treatment, combustion and recreation, or equipment in contact with food and beverages, emergency stop circuits, clutch and brake circuits in press applications, safety equipment or other applications unsuitable for the standard specifications described in the product catalog.
3. An application which could have negative effects on people, property, or animals requiring special safety analysis.
4. Use in an interlock circuit, which requires the provision of double interlock for possible failure by using a mechanical protective function, and periodical checks to confirm proper operation.

⚠ Caution

1. The product is provided for use in manufacturing industries.

The product herein described is basically provided for peaceful use in manufacturing industries.
If considering using the product in other industries, consult SMC beforehand and exchange specifications or a contract if necessary.
If anything is unclear, contact your nearest sales branch.

Limited warranty and Disclaimer/ Compliance Requirements

The product used is subject to the following "Limited warranty and Disclaimer" and "Compliance Requirements".
Read and accept them before using the product.

Limited warranty and Disclaimer

1. The warranty period of the product is 1 year in service or 1.5 years after the product is delivered, whichever is first.*2)
   Also, the product may have specified durability, running distance or replacement parts. Please consult your nearest sales branch.
2. For any failure or damage reported within the warranty period which is clearly our responsibility, a replacement product or necessary parts will be provided.
   This limited warranty applies only to our product independently, and not to any other damage incurred due to the failure of the product.
3. Prior to using SMC products, please read and understand the warranty terms and disclaimers noted in the specified catalog for the particular products.

***2) Vacuum pads are excluded from this 1 year warranty.**
A vacuum pad is a consumable part, so it is warranted for a year after it is delivered.
Also, even within the warranty period, the wear of a product due to the use of the vacuum pad or failure due to the deterioration of rubber material are not covered by the limited warranty.

Compliance Requirements

1. The use of SMC products with production equipment for the manufacture of weapons of mass destruction (WMD) or any other weapon is strictly prohibited.
2. The exports of SMC products or technology from one country to another are governed by the relevant security laws and regulations of the countries involved in the transaction. Prior to the shipment of a SMC product to another country, assure that all local rules governing that export are known and followed.

⚠ Caution

SMC products are not intended for use as instruments for legal metrology.

Measurement instruments that SMC manufactures or sells have not been qualified by type approval tests relevant to the metrology (measurement) laws of each country. Therefore, SMC products cannot be used for business or certification ordained by the metrology (measurement) laws of each country.

Revision History

Edition B * A PROFIsafe compatible product has been added.
* Number of pages has been increased from 16 to 24.

ZR