e-Actuator

Easy to Operate Integrated Controller

Slider Type/Rod Type

Battery-less Absolute (Step Motor 24 VDC)

CE UKCA RoHS

Easy to set up,

just like air equipment!

2-position stop
- Single solenoid mode
- Double solenoid mode

Control mode switching

3-position stop
- Closed center mode

Cycle time setting available

Space saving
Built-in controller

Wiring saving

Labor saving
Programless
Reduced adjustment time

Annual CO_2 emissions: Max. 59% reduction
(SMC comparison) p. 4

5.8 kg-CO_2e/year **(14.1)**

* The numerical values vary depending on the operating conditions.

New● Size 16 has been added.

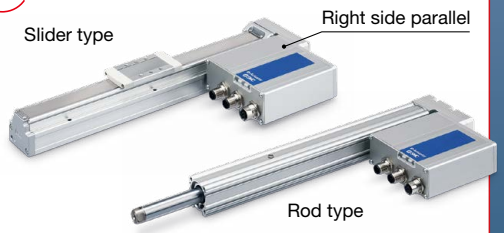

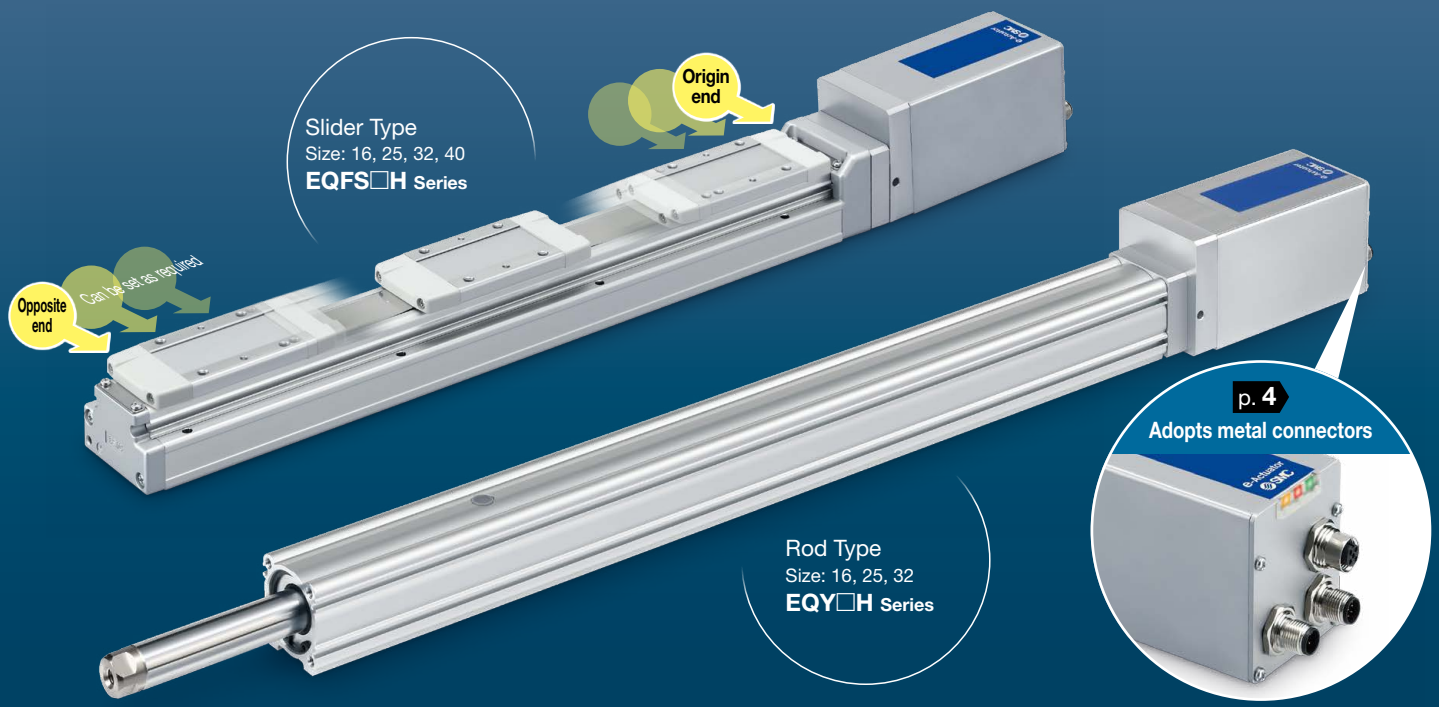

EQFS□H/EQY□H Series

SMC

CAT.ES100-154B

Simple setting allows for immediate use.

Two position stop with no programming required

For single solenoid mode (2-position)/ double solenoid mode (2-position)

All configurable on one screen.
Just **2 steps** to complete!

* When used in single solenoid mode, the control mode must be changed.

Step 1 Select the control mode.

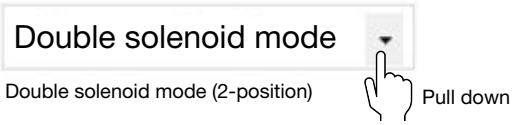

Step 2 Set the speed, acceleration, and deceleration.

Operating Conditions

* In these charts, settling time is not included.

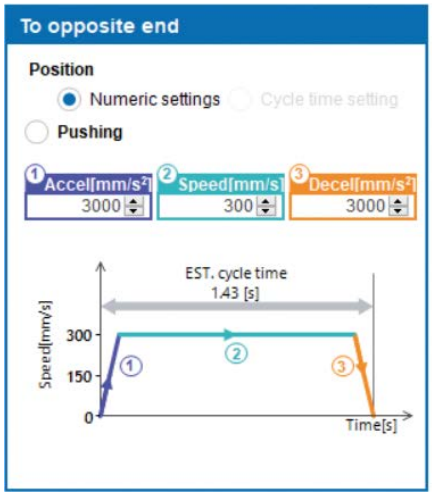

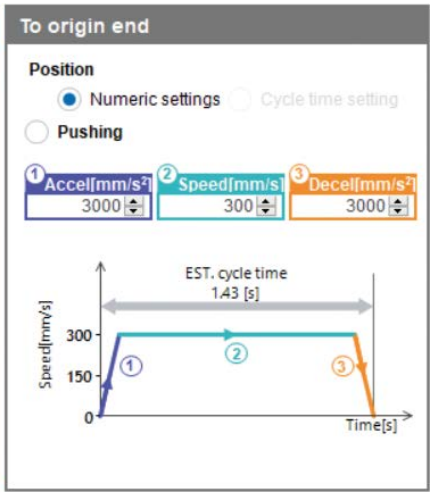

Setting complete Test operation is possible immediately after setting up.

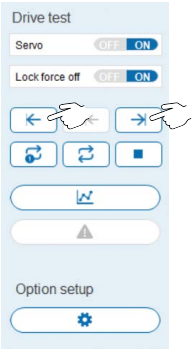

Just press the forward/backward button.

⚠ Caution

The stop position can be changed. For use in positions other than the default setting, refer to the operation manual.

Easy to set intermediate positions

Three position stop with no programming required

For closed center mode (3-position)

All configurable on one screen.
Just **3 steps** to complete!

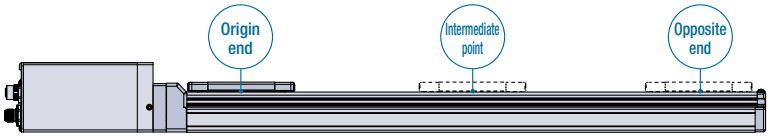

Step 1 Select the control mode.

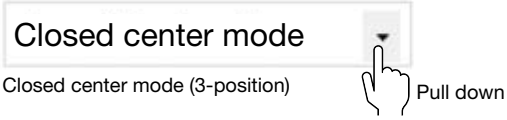

Step 2 Set the intermediate point position.

Position Setup

Step 3 Set the speed, acceleration, and deceleration.

Operating Conditions

＊ In these charts, settling time is not included.

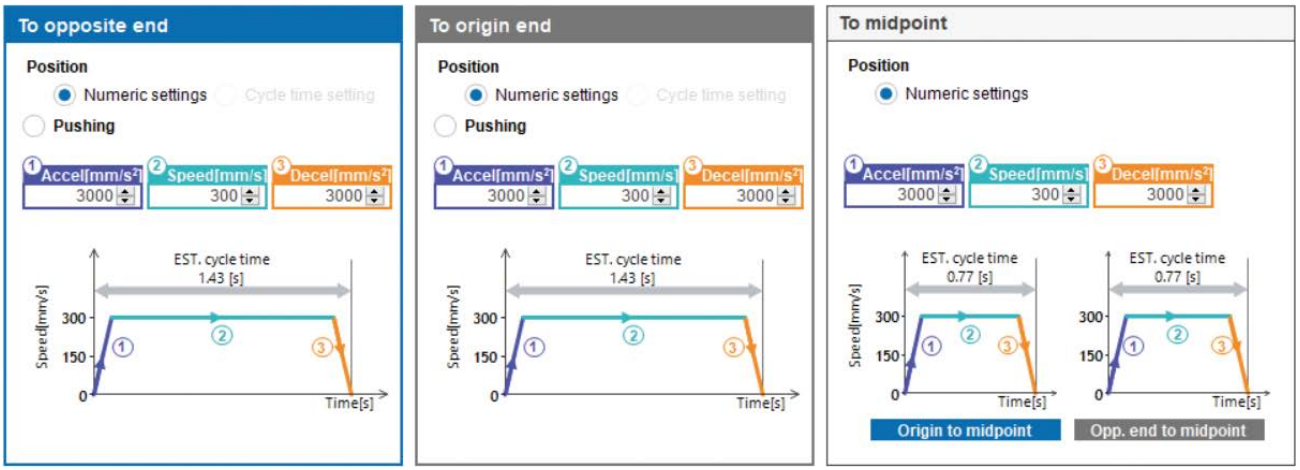

Setting complete Test operation is possible immediately after setting up.

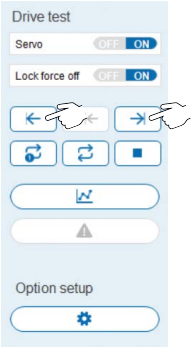

Just press the forward/backward button.

Cycle times are also *easily set.*

Cycle time can be set in all control modes.

For single solenoid mode (2-position)/ double solenoid mode (2-position)

Step 1 Temporary setting of forward and backward speeds, acceleration/deceleration

Operating Conditions

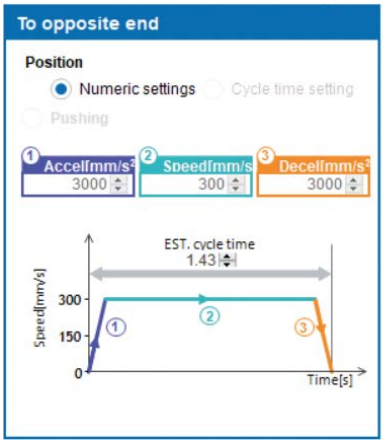

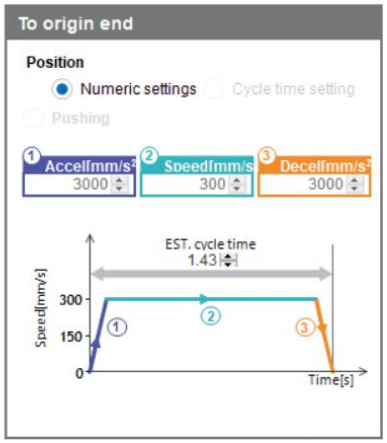

* In these charts, settling time is not included.
* The operating conditions to an intermediate point do not correspond to the cycle time setting.
* Cycle time cannot be set for pushing operation.

Step 2 Operate one cycle and check the graph.

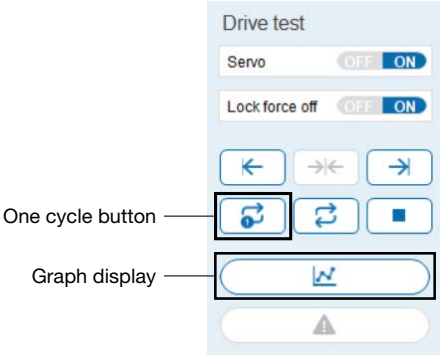

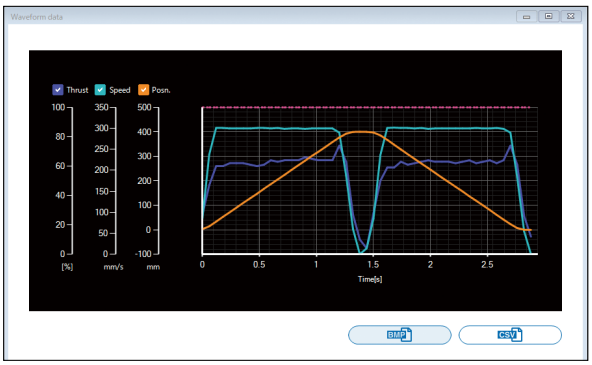

Green: Current speed
Blue: Current force
Orange: Current position

Setting complete Adjustable according to cycle time

Operating Conditions

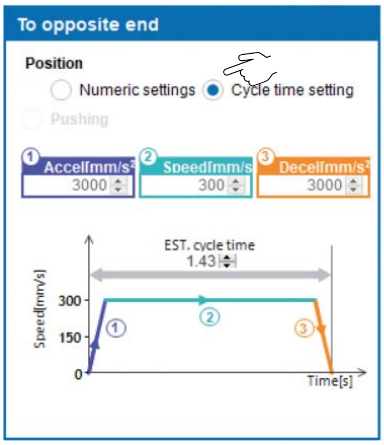

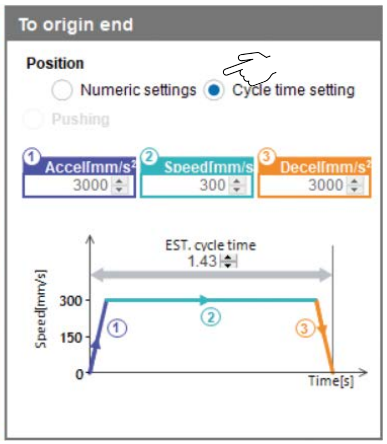

* In these charts, settling time is not included.

⚠ Caution

The stop position can be changed. For use in positions other than the default setting, refer to the operation manual.

Annual CO_2 emissions reduced by up to 59% through motor control optimization (SMC comparison)

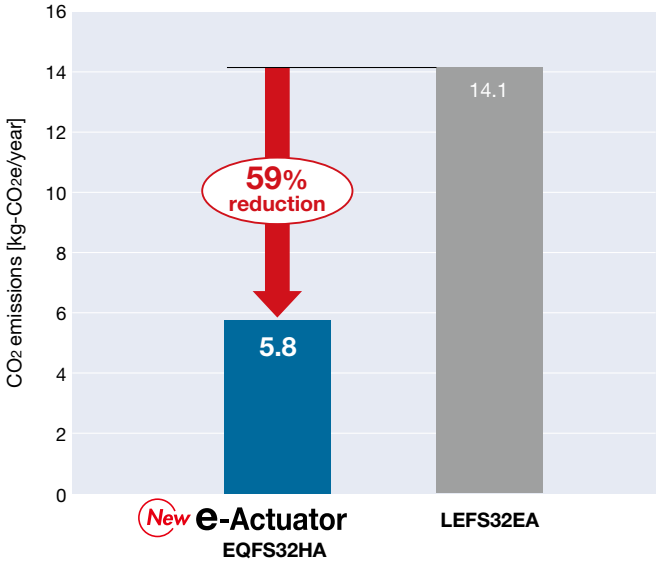

Operating conditions

- Slider type, Size 32
- Acceleration/Deceleration: 3000 mm/s²
- Speed: 50 mm/s
- Duty ratio: 20%

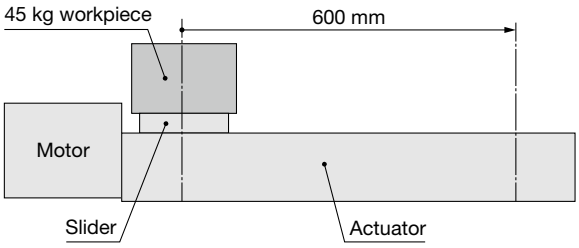

∗ The numerical values vary depending on the operating conditions.

LEDs indicate the load condition.

PWR Green :
Lights up during normal operation after power on

ALM Red :
Lights up when an alarm is generated

OVL Orange :
Lights up when an overload condition occurs

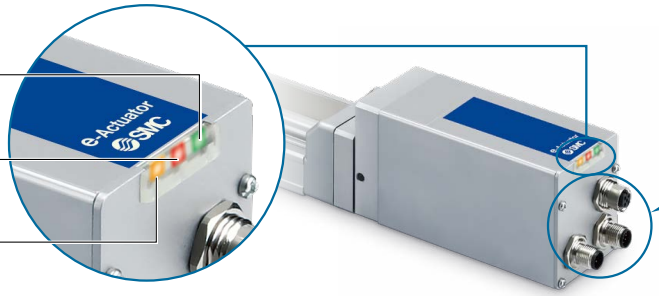

Increased metal connector strength

Communication cable connector

Parallel I/O connector

Power supply connector

Restart from the last stop position is possible.

Easy operation restart after recovery of the power supply

The position information is held by the encoder even when the power supply is turned off. A return to origin operation is not necessary when the power supply is recovered.

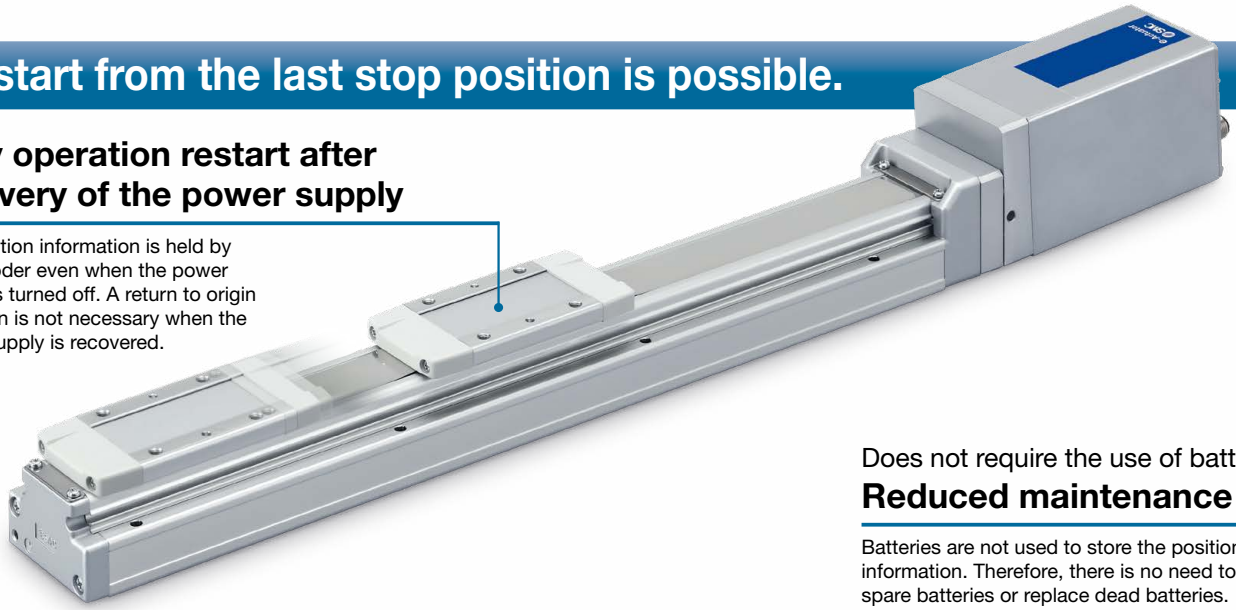

Does not require the use of batteries.

Reduced maintenance

Batteries are not used to store the position information. Therefore, there is no need to store spare batteries or replace dead batteries.

Can be selected from 4 directions (In-line motor type)

Top side

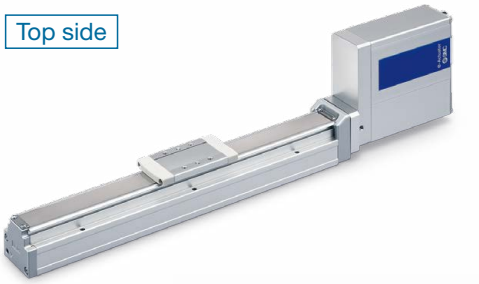

Bottom side

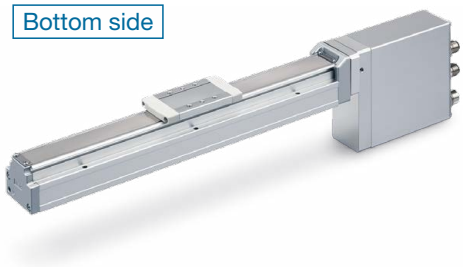

Left side

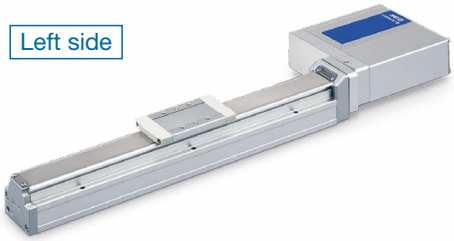

Right side

∗ Varies depending on the actuator size

Detection of table stop position by means of an auto switch is possible. p. 29

2-color indicator solid state auto switch (D-M9□ series)
Accurate setting of the mounting position can be performed without mistakes.

A green light lights up when within the optimum operating range.

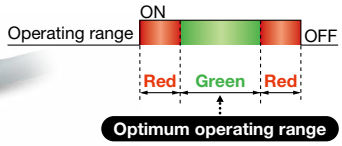

For the slider type

Allows for position detection of the table throughout the stroke

For the rod type

For checking the limit and the intermediate signal

System Construction/General Purpose I/O

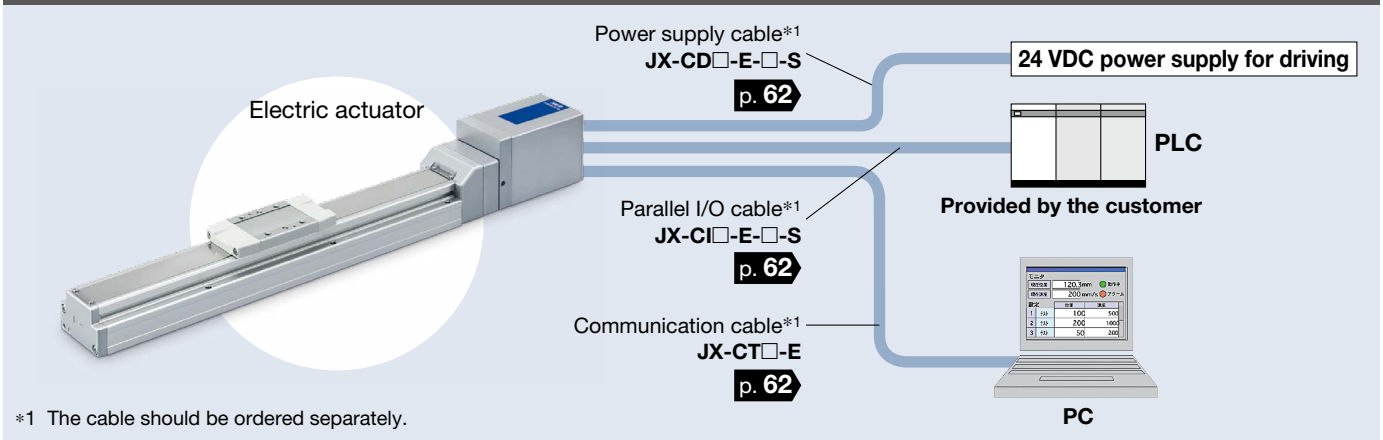

∗1 The cable should be ordered separately.

Variations

Type		Slider type	Rod type
Series		EQFS□H 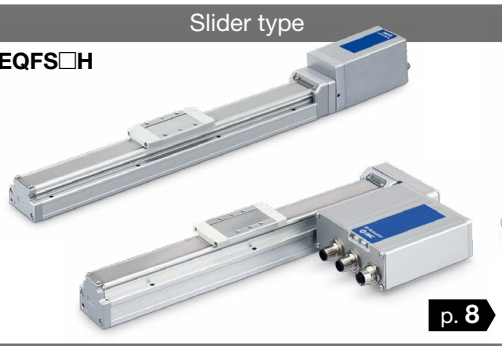 p. 8	EQY□H  p. 36
Actuation type		In-line: Ball screw Parallel: Ball screw + Belt	In-line: Ball screw Parallel: Ball screw + Belt
Max. speed*1 [mm/s]		1200	900
Positioning repeatability [mm]		±0.02	±0.02
Drive motor	Battery-less absolute (Step motor 24 VDC)	●	●
Power supply		24 VDC ±10%	
I/O signal		Parallel input: 3 inputs Parallel output: 4 outputs	
Operation mode		Positioning operation	Positioning operation Pushing operation (Excludes intermediate points)
Size	16	●	●
	25	●	●
	32	●	●
	40	●	—
Max. work load [kg] The values in parentheses are for when mounted vertically	Size 16	18 (12)	40 (10)
	Size 25	40 (15)	70 (30)
	Size 32	68 (20)	100 (46)
	Size 40	80 (40)	—
Max. pushing force [N]	Size 16	—	141
	Size 25	—	452
	Size 32	—	707
	Size 40	—	—
Max. stroke [mm]		1200	500
Auto switch mounting		●	●

*1 The numerical values vary depending on the actuator type, work load, speed, and specifications.
Please contact SMC for further details.

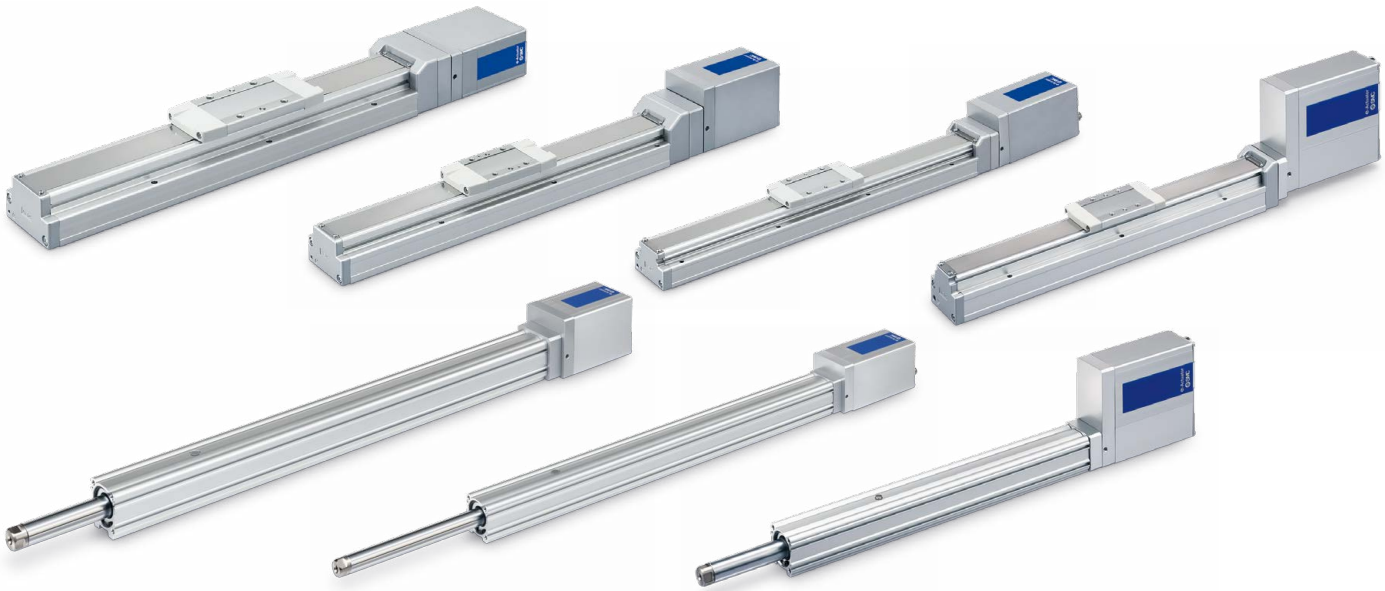

CONTENTS

e-Actuator

Easy to Operate Integrated Controller

Slider Type *EQFS□H Series* p. 8

Battery-less Absolute (Step Motor 24 VDC)

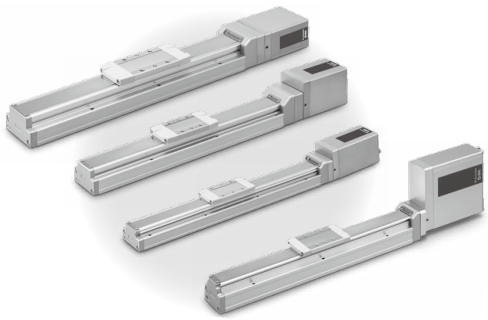

Rod Type *EQY□H Series* p. 36

Battery-less Absolute (Step Motor 24 VDC)

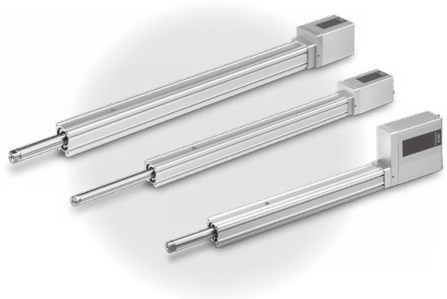

e-Actuator

Easy to Operate Integrated Controller / Slider Type

EQFS□H Series

p. 9

Battery-less Absolute (Step Motor 24 VDC)

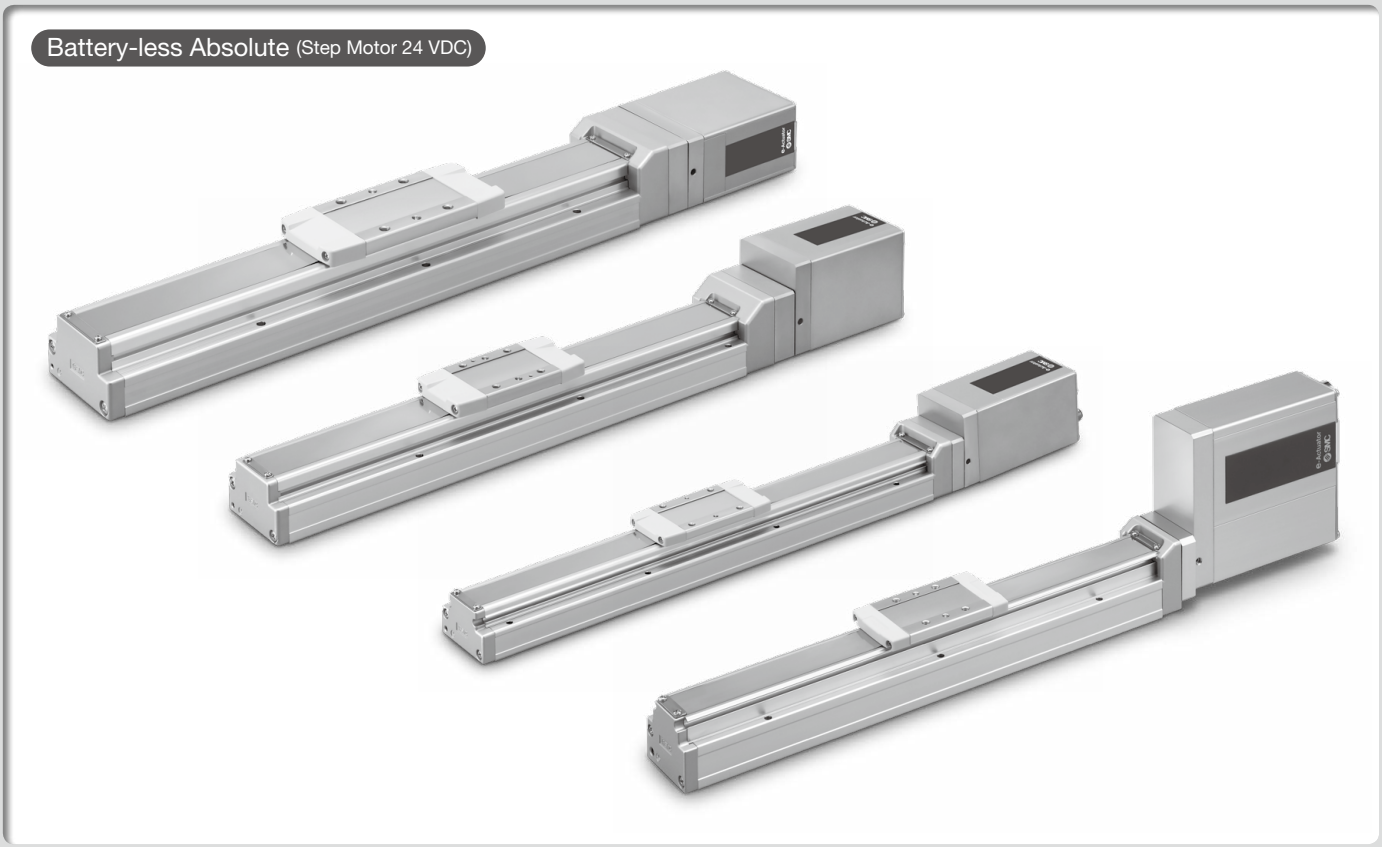

Model Selection

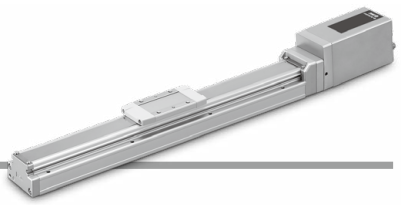

Selection Procedure

Step 1 Check the work load–speed. → **Step 2** Check the cycle time. → **Step 3** Check the allowable moment.

Selection Example

Operating conditions

- Workpiece mass: 10 [kg]
- Speed: 300 [mm/s]
- Acceleration/Deceleration: 10000 [mm/s²]
- Stroke: 200 [mm]
- Mounting orientation: Horizontal upward
- Workpiece mounting condition:

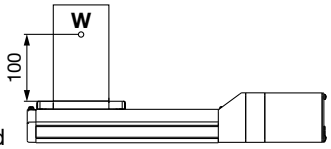

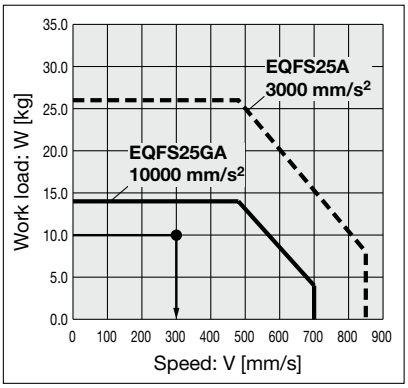

<Speed–Work load graph>
(EQFS25HA/Battery-less absolute)

Step 1 **Check the work load–speed. <Speed–Work load graph>** (pages 10 to 13)

Select a model based on the workpiece mass and speed while referencing the speed–work load graph.

Selection example) The **EQFS25HA-200** can be temporarily selected as a possible candidate based on the graph shown on the right side.

Step 2 **Check the cycle time.**

Calculate **the cycle time** using the following calculation method.

Cycle time:

T can be found from the following equation.

$$T = T1 + T2 + T3 + T4 \text{ [s]}$$

- T1: Acceleration time and T3: Deceleration time can be found by the following equation.

$$T1 = V/a1 \text{ [s]} \qquad T3 = V/a2 \text{ [s]}$$

- T2: Constant speed time can be found from the following equation.

$$T2 = \frac{L - 0.5 \cdot V \cdot (T1 + T3)}{V} \text{ [s]}$$

- T4: Settling time varies depending on the conditions such as actuator types, load, and in position of the step data. Reference value for settling time: 0.15 s or less
  The following value is used for this calculation.

$$T4 = 0.15 \text{ [s]}$$

Calculation example)
T1 to T4 can be calculated as follows.

$T1 = V/a1 = 300/10000 = 0.03$ [s],

$T3 = V/a2 = 300/10000 = 0.03$ [s]

$$T2 = \frac{L - 0.5 \cdot V \cdot (T1 + T3)}{V} = \frac{200 - 0.5 \cdot 300 \cdot (0.03 + 0.03)}{300} = 0.64 \text{ [s]}$$

$T4 = 0.15$ [s]

The cycle time can be found as follows.

$T = T1 + T2 + T3 + T4$
$= 0.03 + 0.64 + 0.03 + 0.15$
$=$ **0.85 [s]**

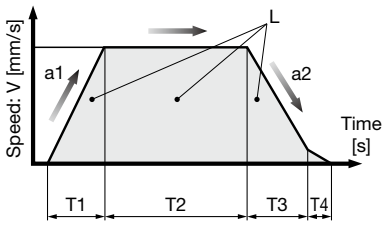

L : Stroke [mm] ··· (Operating condition)
V : Speed [mm/s] ··· (Operating condition)
a1: Acceleration [mm/s²] ··· (Operating condition)
a2: Deceleration [mm/s²] ··· (Operating condition)

T1: Acceleration time [s]
Time until reaching the set speed
T2: Constant speed time [s]
Time while the actuator is operating at a constant speed
T3: Deceleration time [s]
Time from the beginning of the constant speed operation to stop
T4: Settling time [s]
Time until positioning is completed

Step 3 **Check the allowable moment.** **<Static allowable moment>** (page 13)
<Dynamic allowable moment> (pages 14 and 15)

Confirm the moment that applies to the actuator is within the allowable range for both static and dynamic conditions.

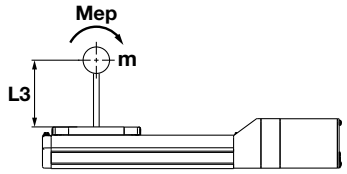

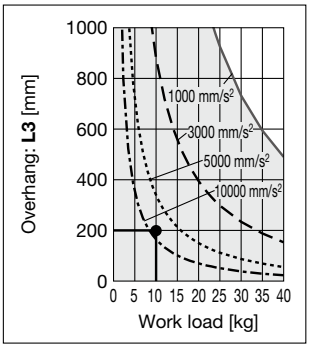

Based on the above calculation result, the EQFS25A-200 should be selected.

Speed–Work Load Graph (Guide)

EQFS16□HA/Ball Screw Drive

Horizontal/Lead 10

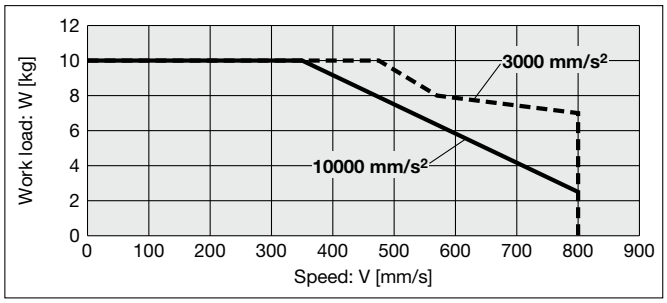

Vertical/Lead 10

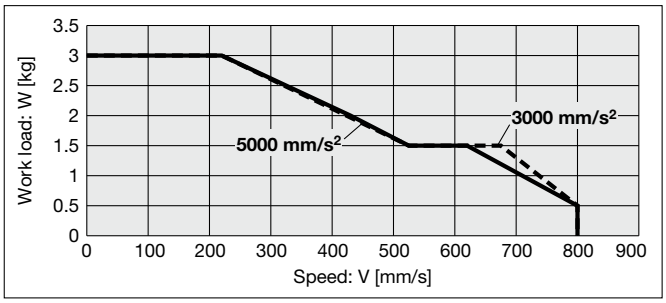

EQFS16□HB/Ball Screw Drive

Horizontal/Lead 5

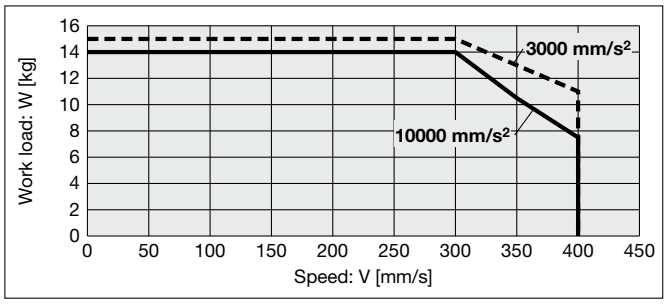

Vertical/Lead 5

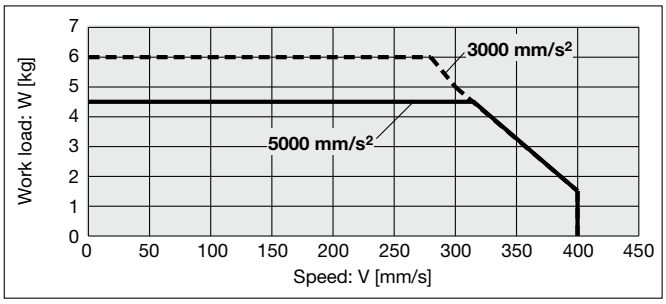

EQFS16□HC/Ball Screw Drive

Horizontal/Lead 2.5

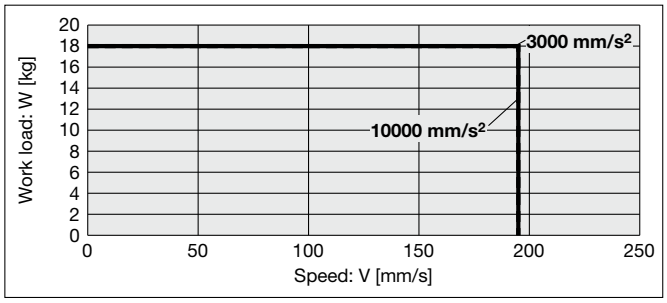

Vertical/Lead 2.5

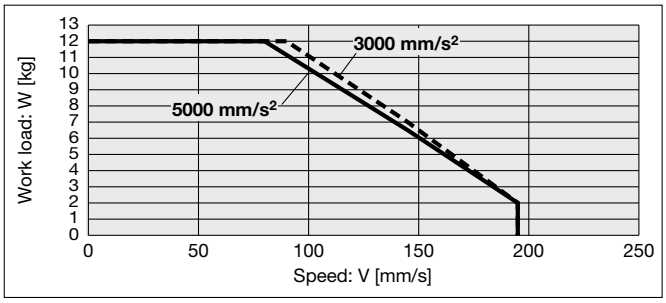

Speed–Work Load Graph (Guide)

EQFS25□HH/Ball Screw Drive

Horizontal/Lead 20

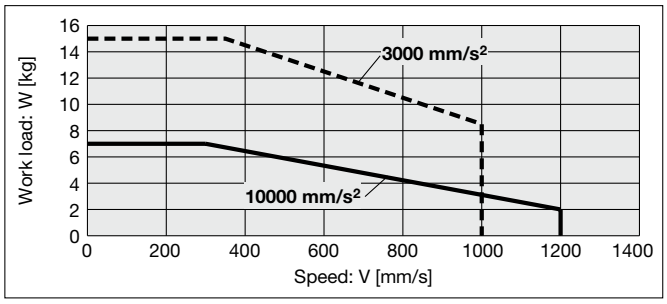

Vertical/Lead 20

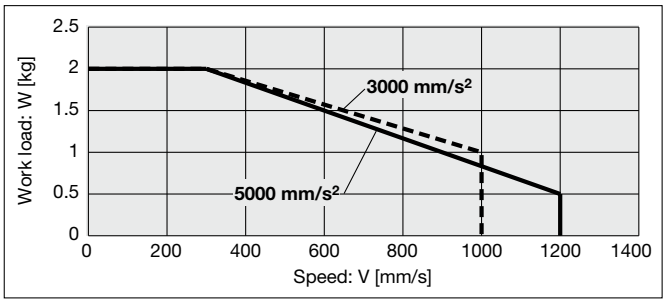

EQFS25□HA/Ball Screw Drive

Horizontal/Lead 12

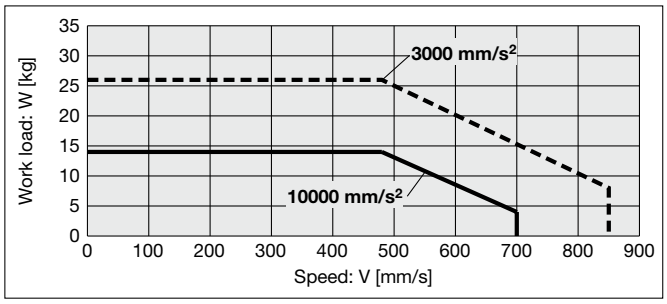

Vertical/Lead 12

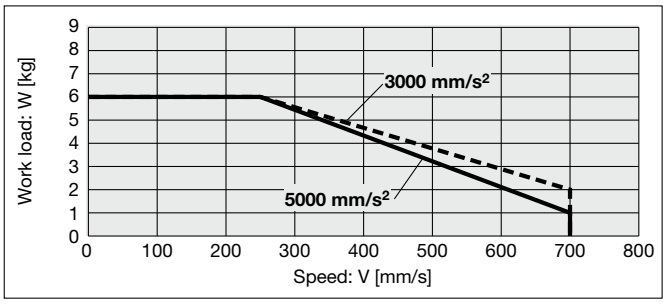

EQFS25□HB/Ball Screw Drive

Horizontal/Lead 6

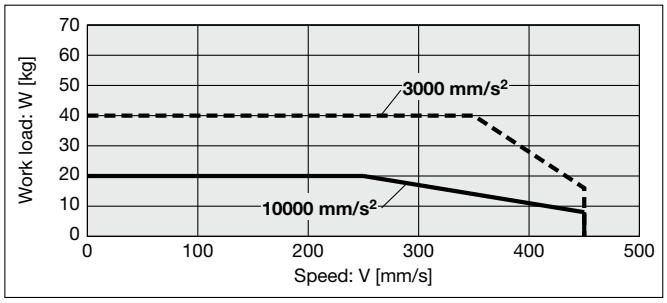

Vertical/Lead 6

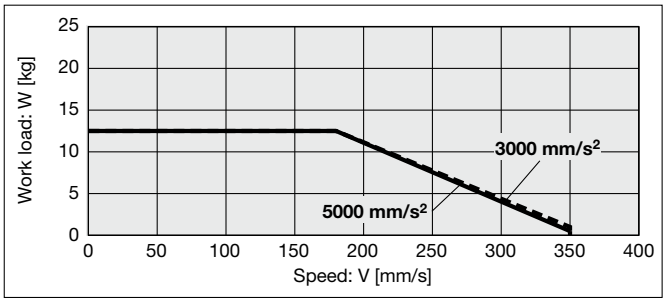

EQFS25□HC/Ball Screw Drive

Horizontal/Lead 3

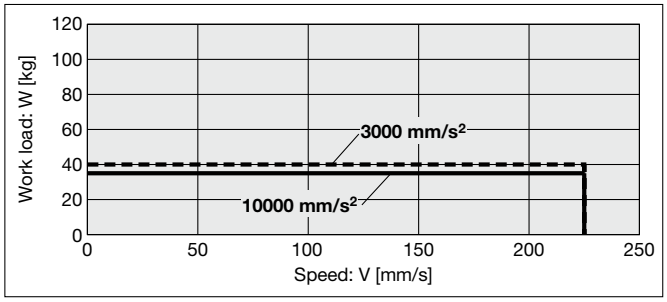

Vertical/Lead 3

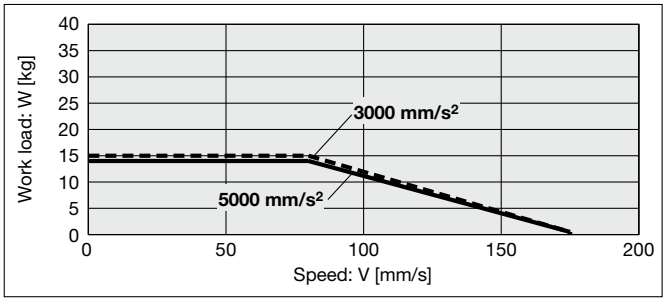

Speed–Work Load Graph (Guide)

EQFS32□HH/Ball Screw Drive

Horizontal/Lead 24

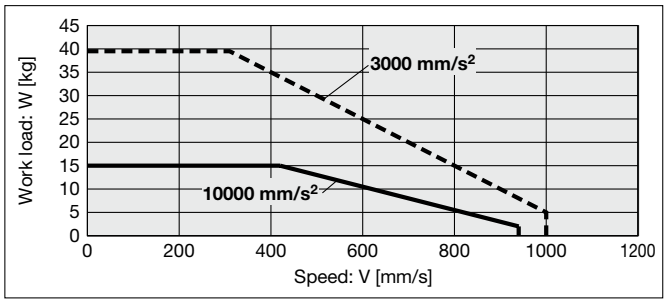

Vertical/Lead 24

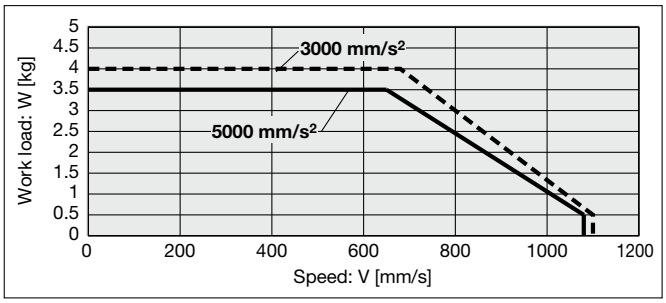

EQFS32□HA/Ball Screw Drive

Horizontal/Lead 16

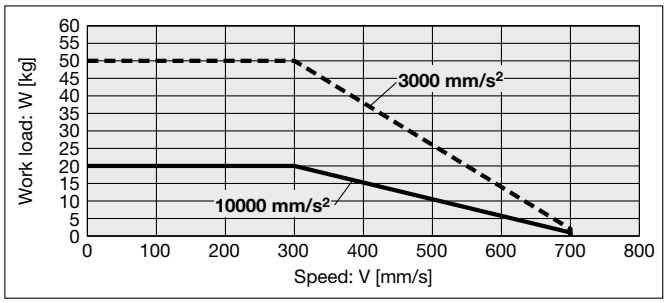

Vertical/Lead 16

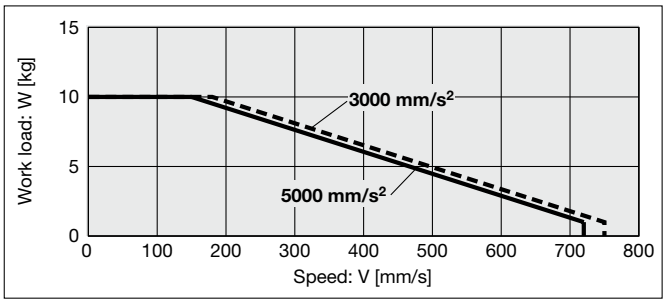

EQFS32□HB/Ball Screw Drive

Horizontal/Lead 8

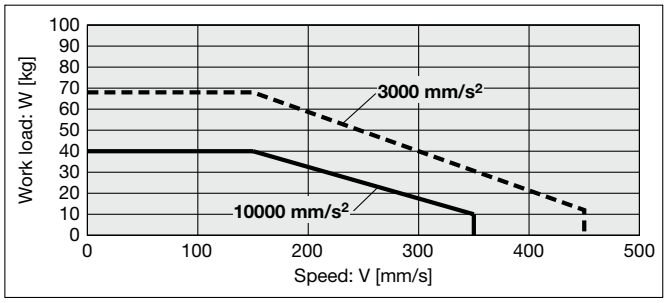

Vertical/Lead 8

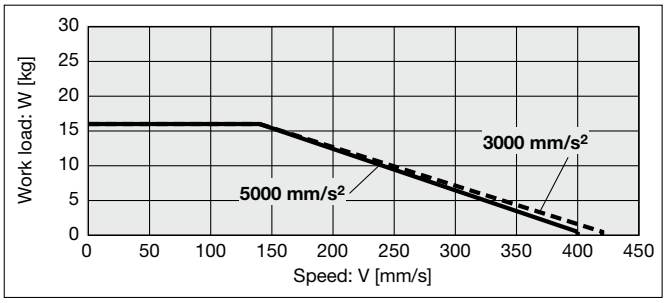

EQFS32□HC/Ball Screw Drive

Horizontal/Lead 4

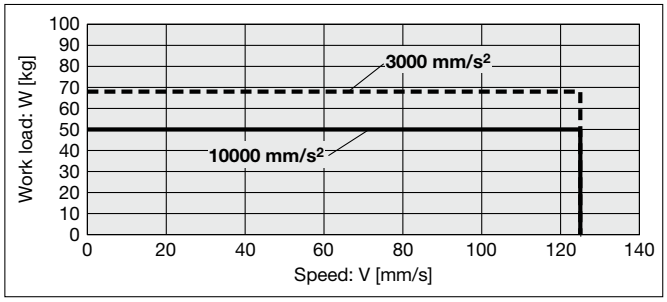

Vertical/Lead 4

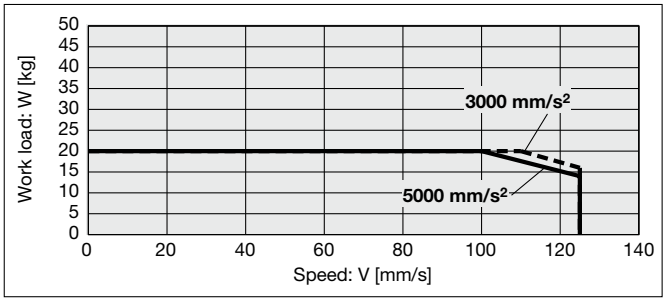

Speed–Work Load Graph (Guide)

EQFS40□HH/Ball Screw Drive

Horizontal/Lead 30

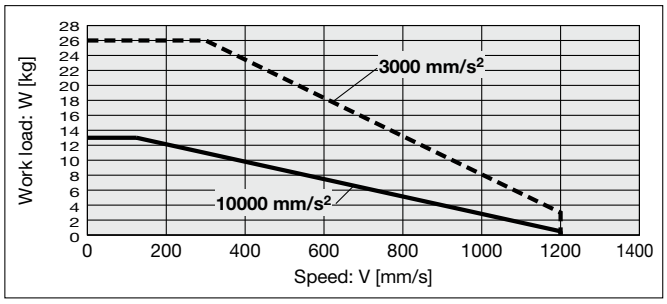

Vertical/Lead 30

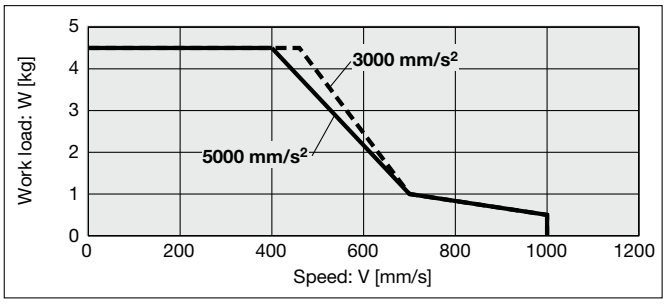

EQFS40□HA/Ball Screw Drive

Horizontal/Lead 20

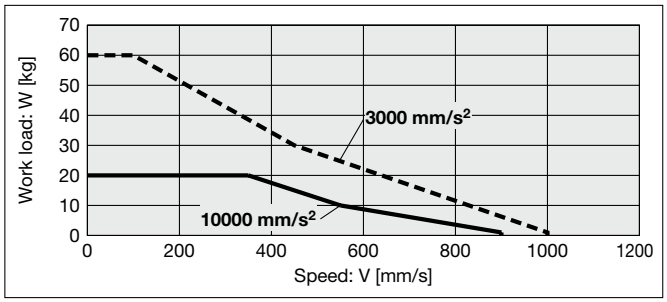

Vertical/Lead 20

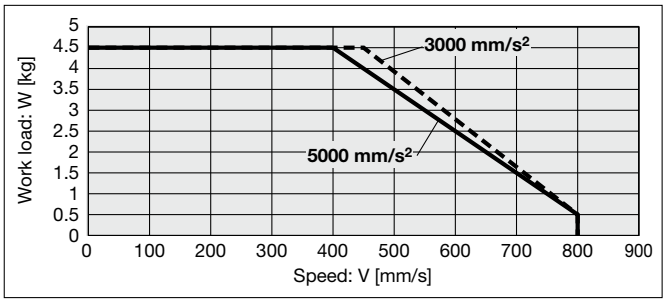

EQFS40□HB/Ball Screw Drive

Horizontal/Lead 10

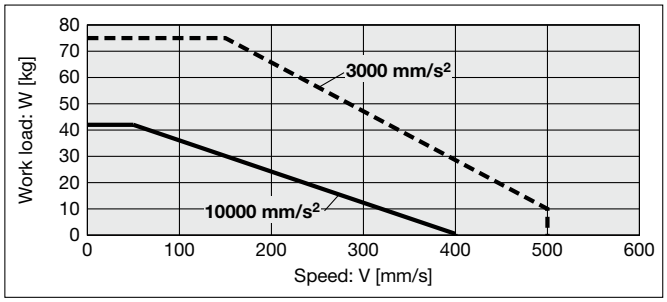

Vertical/Lead 10

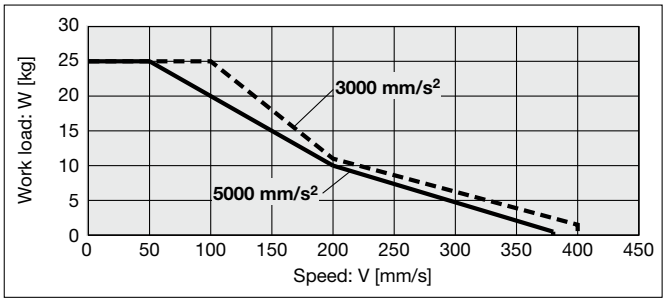

EQFS40□HC/Ball Screw Drive

Horizontal/Lead 5

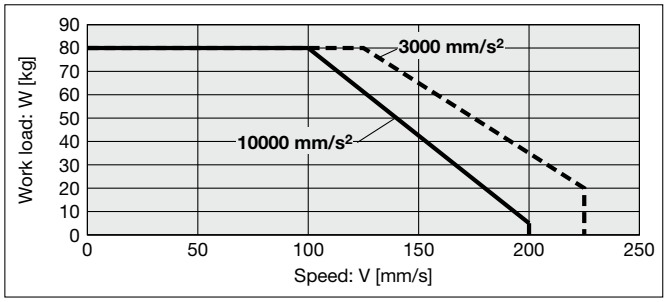

Vertical/Lead 5

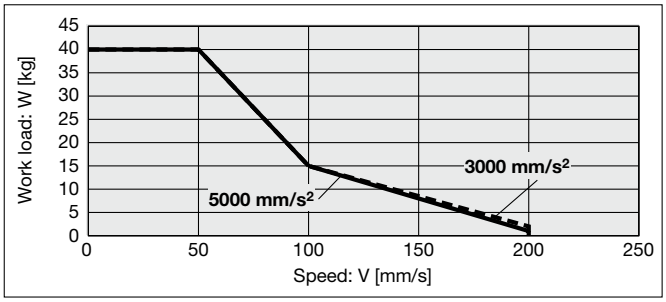

Static Allowable Moment*1

[N·m]

Model	Size	Pitching	Yawing	Rolling
EQFS□H	**16**	10.0	10.0	20.0
	25	27.0	27.0	52.0
	32	46.0	46.0	101.0
	40	110.0	110.0	207.0

*1 The static allowable moment is the amount of static moment which can be applied to the actuator when it is stopped.
If the product is exposed to impact or repeated load, be sure to take adequate safety measures when using the product.

Dynamic Allowable Moment

∗ These graphs show the amount of allowable overhang (guide unit) when the center of gravity of the workpiece overhangs in one direction.

Acceleration ——1000 mm/s² – – –3000 mm/s² ·····5000 mm/s² –·–·–10000 mm/s²

Orientation	Load overhanging direction **m** : Work load [kg] **Me**: Allowable moment [N·m] **L** : Overhang to the work load center of gravity [mm]		Model			
			EQFS16□H	**EQFS25□H**	**EQFS32□H**	**EQFS40□H**
Horizontal/Bottom	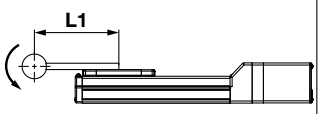	X	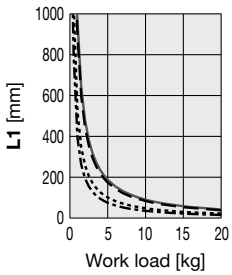	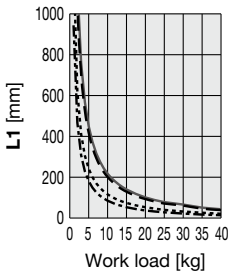	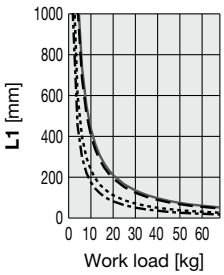	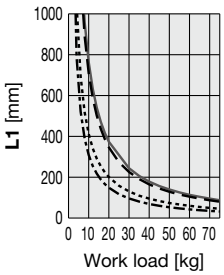
	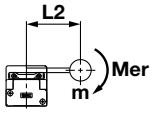	Y	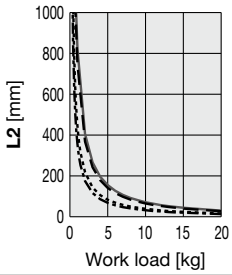	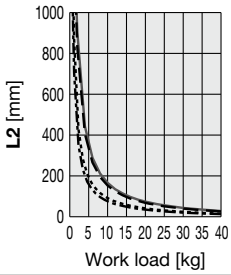	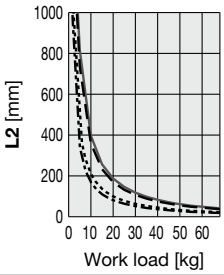	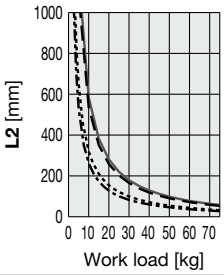
	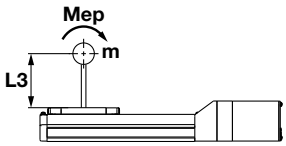	Z	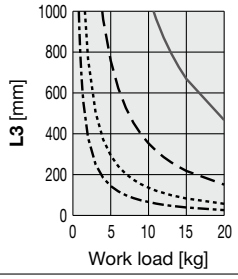	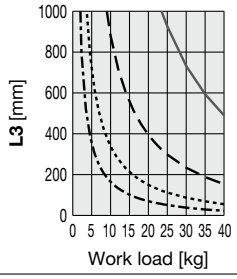	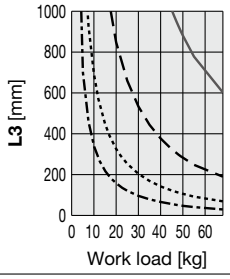	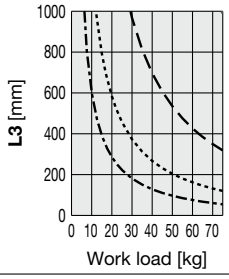
Wall	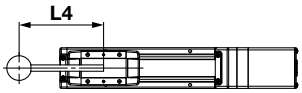	X	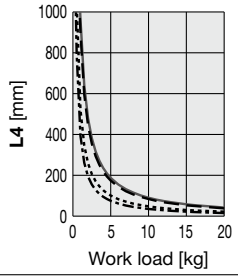	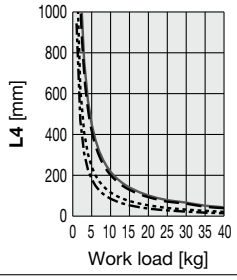	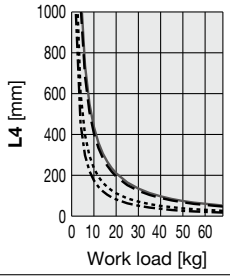	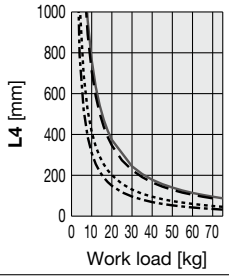
	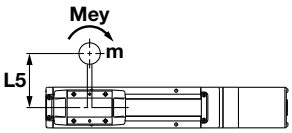	Y	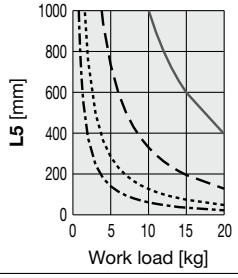	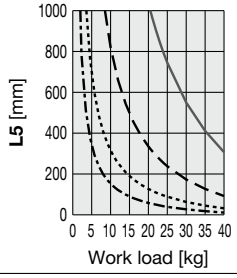	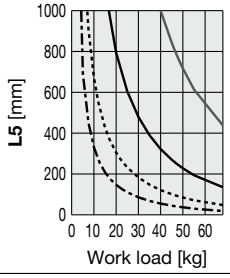	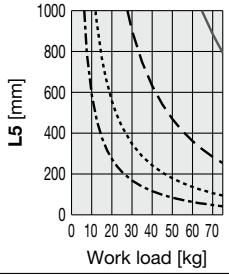
	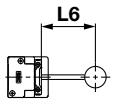	Z	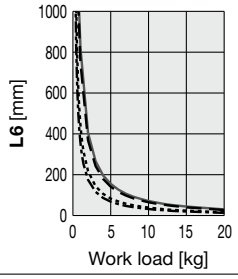	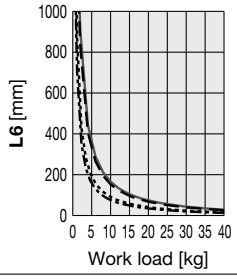	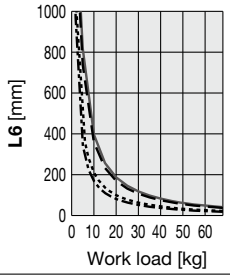	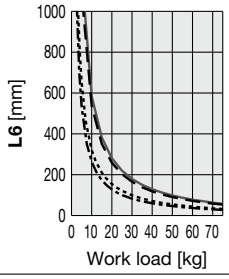

Dynamic Allowable Moment

∗ These graphs show the amount of allowable overhang (guide unit) when the center of gravity of the workpiece overhangs in one direction.

Acceleration ——1000 mm/s² — — —3000 mm/s² ·····5000 mm/s²

Orientation	Load overhanging direction **m** : Work load [kg] **Me**: Allowable moment [N·m] **L** : Overhang to the work load center of gravity [mm]		Model			
			EQFS16□H	**EQFS25□H**	**EQFS32□H**	**EQFS40□H**
Vertical	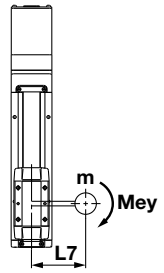	**Y**	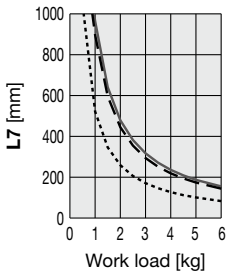	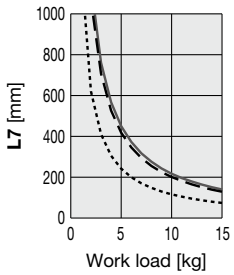	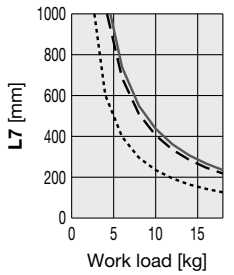	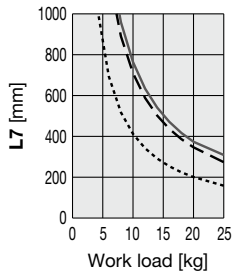
	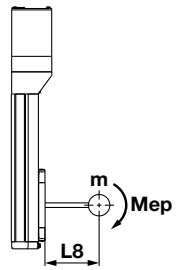	**Z**	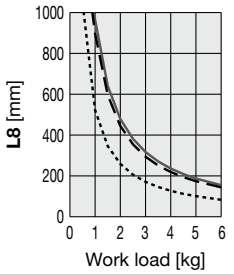	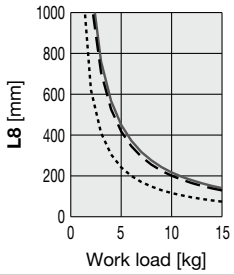	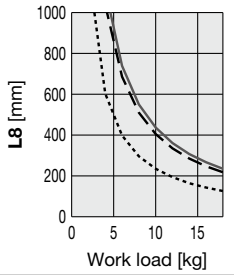	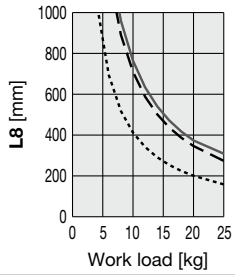

Calculation of Guide Load Factor

1. Decide operating conditions.
   Model: EQFS□H
   Size: 16/25/32/40
   Mounting orientation: Horizontal/Bottom/Wall/Vertical
   Acceleration [mm/s²]: **a**
   Work load [kg]: **m**
   Work load center position [mm]: **Xc/Yc/Zc**
2. Select the target graph while referencing the model, size, and mounting orientation.
3. Based on the acceleration and work load, find the overhang [mm]: **Lx/Ly/Lz** from the graph.
4. Calculate the load factor for each direction.
   $\alpha x = Xc/Lx$, $\alpha y = Yc/Ly$, $\alpha z = Zc/Lz$
5. Confirm the total of αx, αy, and αz is 1 or less.
   $\alpha x + \alpha y + \alpha z \leq 1$
   When 1 is exceeded, please consider a reduction of acceleration and work load, or a change of the work load center position and series.

Mounting orientation

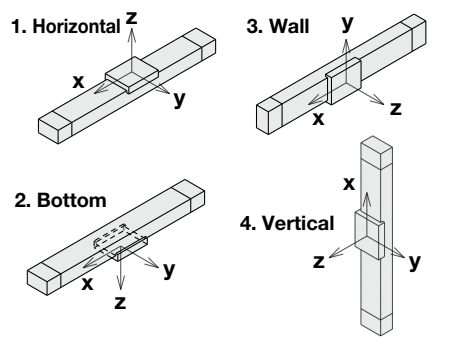

Example

1. Operating conditions
   Model: EQFS40□H
   Size: 40
   Mounting orientation: Horizontal
   Acceleration [mm/s²]: 3000
   Work load [kg]: 20
   Work load center position [mm]: **Xc = 0**, **Yc = 50**, **Zc = 200**
2. Select the graphs for horizontal of the EQFS40□H on page 14.
3. **Lx = 350 mm**, **Ly = 250 mm**, **Lz = 1000 mm**
4. The load factor for each direction can be found as follows.
   $\alpha x = 0/350 = 0$
   $\alpha y = 50/250 = 0.2$
   $\alpha z = 200/1000 = 0.2$
5. $\alpha x + \alpha y + \alpha z = 0.4 \leq 1$

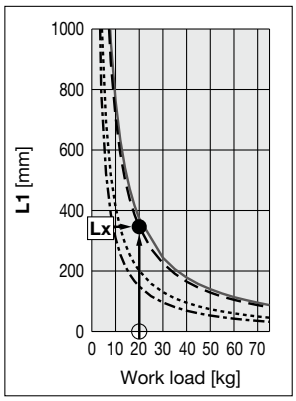

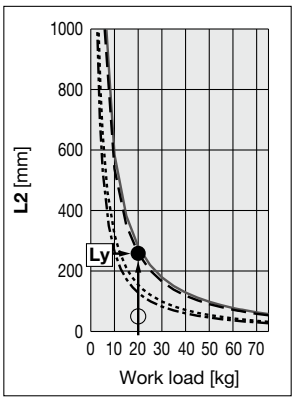

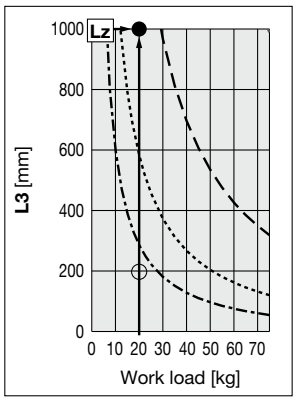

Table Accuracy (Reference Value)

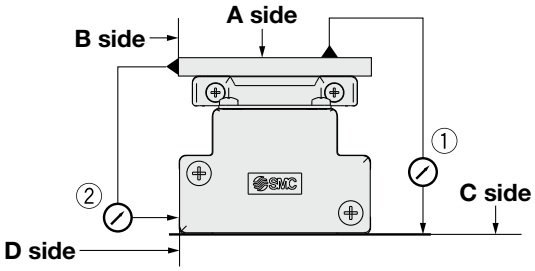

Model	Traveling parallelism [mm] (Every 300 mm)	
	① C side traveling parallelism to A side	② D side traveling parallelism to B side
EQFS16	0.05	0.03
EQFS25	0.05	0.03
EQFS32	0.05	0.03
EQFS40	0.05	0.03

∗ Traveling parallelism does not include the mounting surface accuracy. (Excludes when the stroke exceeds 2000 mm)

Table Displacement (Reference Value)

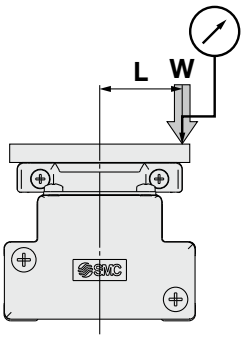

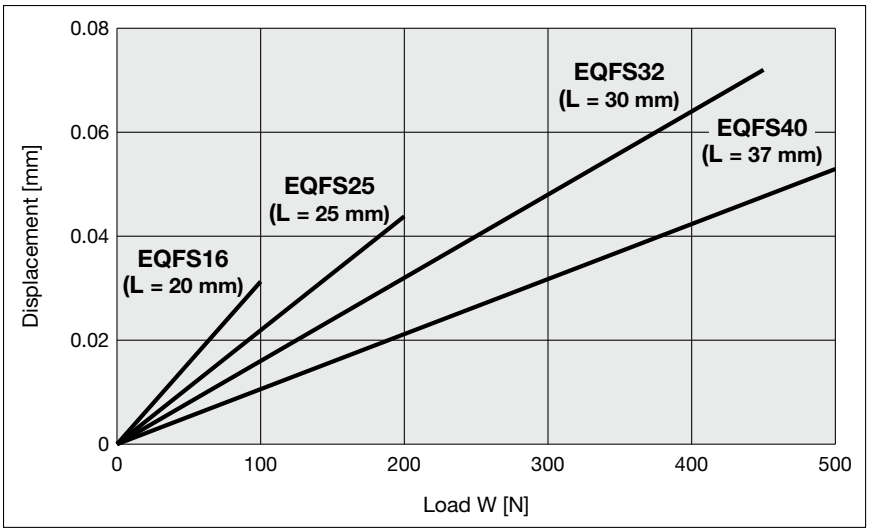

∗ This displacement is measured when a 15 mm aluminum plate is mounted and fixed on the table.
∗ Check the clearance and play of the guide separately.

Overhang Displacement Due to Table Clearance (Initial Reference Value)

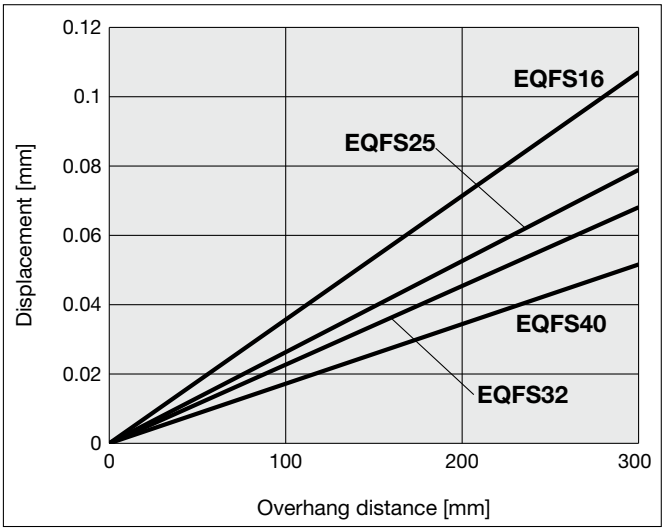

Battery-less Absolute (Step Motor 24 VDC)

e-Actuator Easy to Operate
Integrated Controller / Slider Type
EQFS□H Series EQFS16, 25, 32, 40

CE UKCA RoHS

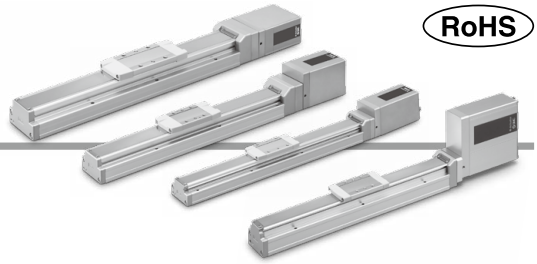

How to Order

EQFS 32 R H A – 300 □ □ – B 5

❶ ❷ ❸ ❹ ❺ ❻ ❼ ❽ ❾

❶ Size

16
25
32
40

❷ Motor mounting position/ Motor cover direction

Motor mounting position: In-line

Symbol	Motor cover direction*1	Size
Nil	–	25/32/40
D1	Left side	16
D2	Right side	
D3	Top side	
D4	Bottom side	

*1 This is the direction seen from the connector side.

Motor mounting position: Parallel

Symbol	Direction	Size
R	Right side	16/25/32/40
L	Left side	

❸ Motor type

H	Battery-less absolute (Step motor 24 VDC)

❹ Lead [mm]

Symbol	EQFS16	EQFS25	EQFS32	EQFS40
H	–	20	24	30
A	10	12	16	20
B	5	6	8	10
C	2.5	3	4	5

❺ Stroke

50	50
to	to
1200	1200

* For details, refer to the applicable stroke table below.

❻ Motor option

Nil	Without option
B	With lock

❼ Grease application (Seal band part)

Nil	With
N	Without (Roller specification)

❽ Controller position

B	Integrated controller

❾ Parallel input

5	NPN
6	PNP

The auto switches should be ordered separately. For details, refer to pages 29 to 32.

Applicable Stroke Table

Size	Stroke																					
	50	100	150	200	250	300	350	400	450	500	550	600	650	700	750	800	850	900	950	1000	1100	1200
16	●	●	●	●	●	●	●	●	●	●	–	–	–	–	–	–	–	–	–	–	–	–
25	●	●	●	●	●	●	●	●	●	●	●	●	●	●	●	●	–	–	–	–	–	–
32	●	●	●	●	●	●	●	●	●	●	●	●	●	●	●	●	●	●	●	●	–	–
40	–	–	●	●	●	●	●	●	●	●	●	●	●	●	●	●	●	●	●	●	●	●

Specifications

Model			EQFS16□H			EQFS25□H				EQFS32□H				EQFS40□H			
Actuator specifications	Stroke [mm]*1		50 to 500			50 to 800				50 to 1000				150 to 1200			
	Work load [kg]*2	Horizontal	10	15	18	15	26	40	40	39.5	50	68	68	26	60	75	80
		Vertical	3	6	12	2	6	12.5	15	4	10	16	20	4.5	4.5	25	40
	Speed [mm/s]	Stroke range: Up to 400	10 to 800	5 to 400	3 to 195	20 to 1200	12 to 850	6 to 450	3 to 225	24 to 1100	16 to 750	8 to 450	4 to 125	30 to 1200	20 to 1000	10 to 500	5 to 225
		401 to 450	10 to 700	5 to 360	3 to 170	20 to 1100	12 to 750	6 to 400	3 to 225	24 to 1100	16 to 750	8 to 450	4 to 125	30 to 1200	20 to 1000	10 to 500	5 to 225
		451 to 500	10 to 600	5 to 300	3 to 140	20 to 1100	12 to 750	6 to 400	3 to 225	24 to 1100	16 to 750	8 to 450	4 to 125	30 to 1200	20 to 1000	10 to 500	5 to 225
		501 to 600	—	—	—	20 to 900	12 to 540	6 to 270	3 to 135	24 to 1100	16 to 750	8 to 400	4 to 125	30 to 1200	20 to 1000	10 to 500	5 to 225
		601 to 700	—	—	—	20 to 630	12 to 420	6 to 230	3 to 115	24 to 930	16 to 620	8 to 310	4 to 125	30 to 1200	20 to 900	10 to 440	5 to 220
		701 to 800	—	—	—	20 to 550	12 to 330	6 to 180	3 to 90	24 to 750	16 to 500	8 to 250	4 to 125	30 to 1140	20 to 760	10 to 350	5 to 175
		801 to 900	—	—	—	—	—	—	—	24 to 610	16 to 410	8 to 200	4 to 100	30 to 930	20 to 620	10 to 280	5 to 140
		901 to 1000	—	—	—	—	—	—	—	24 to 500	16 to 340	8 to 170	4 to 85	30 to 780	20 to 520	10 to 250	5 to 125
		1001 to 1100	—	—	—	—	—	—	—	—	—	—	—	30 to 660	20 to 440	10 to 220	5 to 110
		1101 to 1200	—	—	—	—	—	—	—	—	—	—	—	30 to 570	20 to 380	10 to 190	5 to 95
	Max. acceleration/deceleration [mm/s²]	Horizontal	10000														
		Vertical	5000														
	Positioning repeatability [mm]		±0.02														
	Lost motion [mm]*3		0.1 or less														
	Lead [mm]		10	5	2.5	20	12	6	3	24	16	8	4	30	20	10	5
	Impact/Vibration resistance [m/s²]*4		50/20														
	Actuation type		Ball screw (EQFS□H), Ball screw + Belt (EQFS□$^{R}_{L}$H)														
	Guide type		Linear guide														
	Operating temperature range [°C]		5 to 40														
	Operating humidity range [%RH]		90 or less (No condensation)														
Electric specifications	Motor size		□28			□42				□56.4							
	Motor type		Battery-less absolute (Step motor 24 VDC)														
	Encoder		Battery-less absolute														
	Power supply voltage [V]		24 VDC ±10%														
	Power [W]*5 *7		Max. power 61			Max. power 89				Max. power 116				Max. power 116			
Lock unit specifications	Type*6		Non-magnetizing lock														
	Holding force [N]		29	59	118	47	78	157	294	72	108	216	421	75	113	225	421
	Power [W]*7		5			5				5				5			
	Rated voltage [V]		24 VDC ±10%														

*1 Please contact SMC for non-standard strokes as they are produced as special orders.
*2 The max. work load at 3000 mm/s² acceleration and deceleration speed
Work load varies depending on the speed and acceleration. Check the "Speed–Work Load Graph."
Furthermore, if the cable length exceeds 5 m, the speed and work load specified in the "Speed–Work Load Graph" may decrease by up to 10% for each 5 m increase.
*3 A reference value for correcting errors in reciprocal operation
*4 Impact resistance: No malfunction occurred when the actuator was tested with a drop tester in both an axial direction and a perpendicular direction to the lead screw. (The test was performed with the actuator in the initial state.)
Vibration resistance: No malfunction occurred in a test ranging between 45 to 2000 Hz. The test was performed in both an axial direction and a perpendicular direction to the lead screw. (The test was performed with the actuator in the initial state.)
*5 Indicates the max. power during operation (including the controller). This value can be used for the selection of the power supply.
*6 With lock only
*7 For an actuator with lock, add the power for the lock.

Weight

In-line Motor

Series	EQFS16									
Stroke [mm]	50	100	150	200	250	300	350	400	450	500
Product weight [kg]	0.85	0.92	1.00	1.07	1.15	1.22	1.30	1.37	1.45	1.52
Additional weight with lock [kg]	0.16									

Series	EQFS25															
Stroke [mm]	50	100	150	200	250	300	350	400	450	500	550	600	650	700	750	800
Product weight [kg]	1.77	1.91	2.05	2.19	2.33	2.47	2.61	2.75	2.89	3.03	3.17	3.31	3.45	3.59	3.73	3.87
Additional weight with lock [kg]	0.31															

Series	EQFS32																			
Stroke [mm]	50	100	150	200	250	300	350	400	450	500	550	600	650	700	750	800	850	900	950	1000
Product weight [kg]	3.12	3.32	3.52	3.72	3.92	4.12	4.32	4.52	4.72	4.92	5.12	5.32	5.52	5.72	5.92	6.12	6.32	6.52	6.72	6.92
Additional weight with lock [kg]	0.58																			

Series	EQFS40																			
Stroke [mm]	150	200	250	300	350	400	450	500	550	600	650	700	750	800	850	900	950	1000	1100	1200
Product weight [kg]	4.99	5.27	5.55	5.83	6.11	6.39	6.77	6.95	7.23	7.51	7.79	8.07	8.35	8.63	8.91	9.19	9.47	9.75	10.31	10.87
Additional weight with lock [kg]	0.60																			

Right/Left Side Parallel Motor*1

Series	EQFS16$^{R}_{L}$									
Stroke [mm]	50	100	150	200	250	300	350	400	450	500
Product weight [kg]	0.85	0.92	1.00	1.07	1.15	1.22	1.30	1.37	1.45	1.52
Additional weight with lock [kg]	0.16									

Series	EQFS25$^{R}_{L}$															
Stroke [mm]	50	100	150	200	250	300	350	400	450	500	550	600	650	700	750	800
Product weight [kg]	1.75	1.89	2.03	2.17	2.31	2.45	2.59	2.73	2.87	3.01	3.15	3.29	3.43	3.57	3.71	3.85
Additional weight with lock [kg]	0.31															

Series	EQFS32$^{R}_{L}$																			
Stroke [mm]	50	100	150	200	250	300	350	400	450	500	550	600	650	700	750	800	850	900	950	1000
Product weight [kg]	3.09	3.29	3.49	3.69	3.89	4.09	4.29	4.49	4.69	4.89	5.09	5.29	5.49	5.69	5.89	6.09	6.29	6.49	6.69	6.89
Additional weight with lock [kg]	0.58																			

Series	EQFS40$^{R}_{L}$																			
Stroke [mm]	150	200	250	300	350	400	450	500	550	600	650	700	750	800	850	900	950	1000	1100	1200
Product weight [kg]	5.15	5.43	5.71	5.99	6.27	6.55	6.93	7.11	7.39	7.67	7.95	8.23	8.51	8.79	9.07	9.35	9.63	9.91	10.47	11.03
Additional weight with lock [kg]	0.60																			

*1 The product weight in the table includes the weight of the table spacer.

Table Spacer Weight [g]

EQFS16$^{R}_{L}$	5
EQFS25$^{R}_{L}$	95
EQFS32$^{R}_{L}$	125
EQFS40$^{R}_{L}$	30

Construction

In-line motor

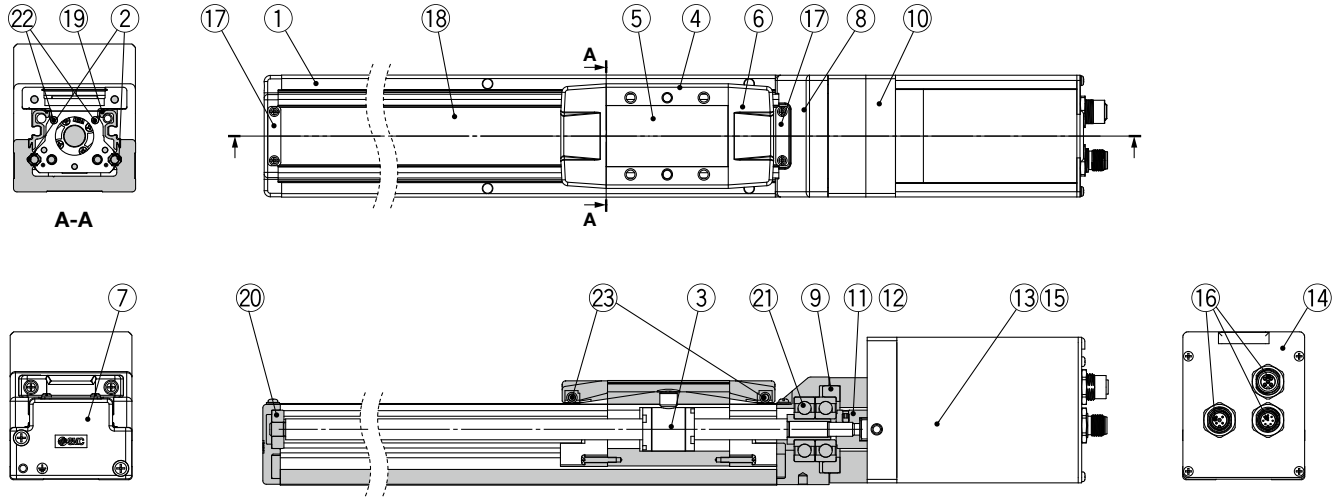

Right/Left side parallel motor

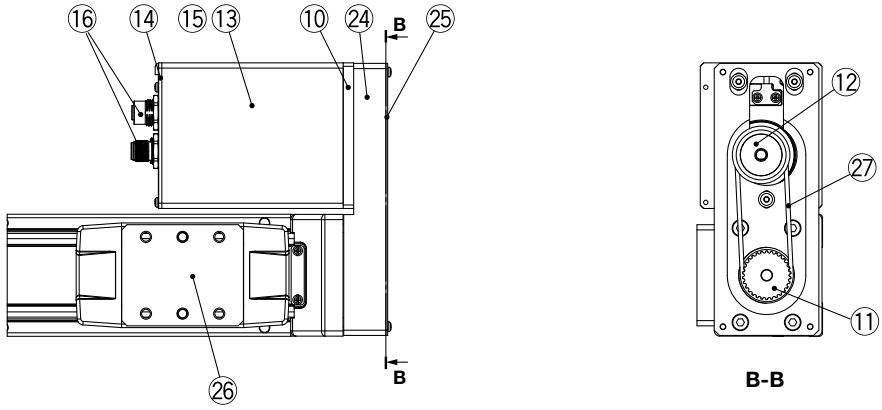

Component Parts

No.	Description	Material	Note
1	**Body**	Aluminum alloy	Anodized
2	**Rail guide**	—	
3	**Ball screw assembly**	—	
4	**Table**	Aluminum alloy	Anodized
5	**Blanking plate**	Aluminum alloy	Anodized
6	**Seal band holder**	Synthetic resin	
7	**Housing A**	Aluminum die-casted	Coating
8	**Housing B**	Aluminum die-casted	Coating
9	**Bearing stopper**	Aluminum alloy	
10	**Motor adapter**	Aluminum alloy	Coating
11	**Screw hub/pulley**	Aluminum alloy	
12	**Motor hub/pulley**	Aluminum alloy	
13	**Motor cover**	Aluminum alloy	Anodized
14	**End cover**	Aluminum alloy	Anodized
15	**Motor**	—	
16	**Connector**	—	
17	**Band stopper**	Stainless steel	
18	**Dust seal band**	Stainless steel	
19	**Seal magnet**	—	
20	**Bearing**	—	201 mm stroke or more
21	**Bearing**	—	
22	**Magnet**	—	
23	**Roller shaft**	Stainless steel	Without grease application

Component Parts (Right/Left side parallel only)

No.	Description	Material	Note
24	**Return plate**	Aluminum alloy	Coating
25	**Cover plate**	Aluminum alloy	Anodized
26	**Table spacer**	Aluminum alloy	Anodized
27	**Belt**	—	

Replacement Parts (Right/Left side parallel only)/Belt

No.	Size	Order no.
27	**16**	LE-D-6-5
	25	LE-D-15-1
	32	LE-D-19-1
	40	LE-D-19-2

Replacement Parts/Grease Pack

Applied portion	Order no.
Ball screw	GR-S-010 (10 G) GR-S-020 (20 G)
Rail guide	
Dust seal band (When “Without” is selected for the grease application, grease is applied only on the back side.)	

Dimensions: In-line Motor

EQFS16H

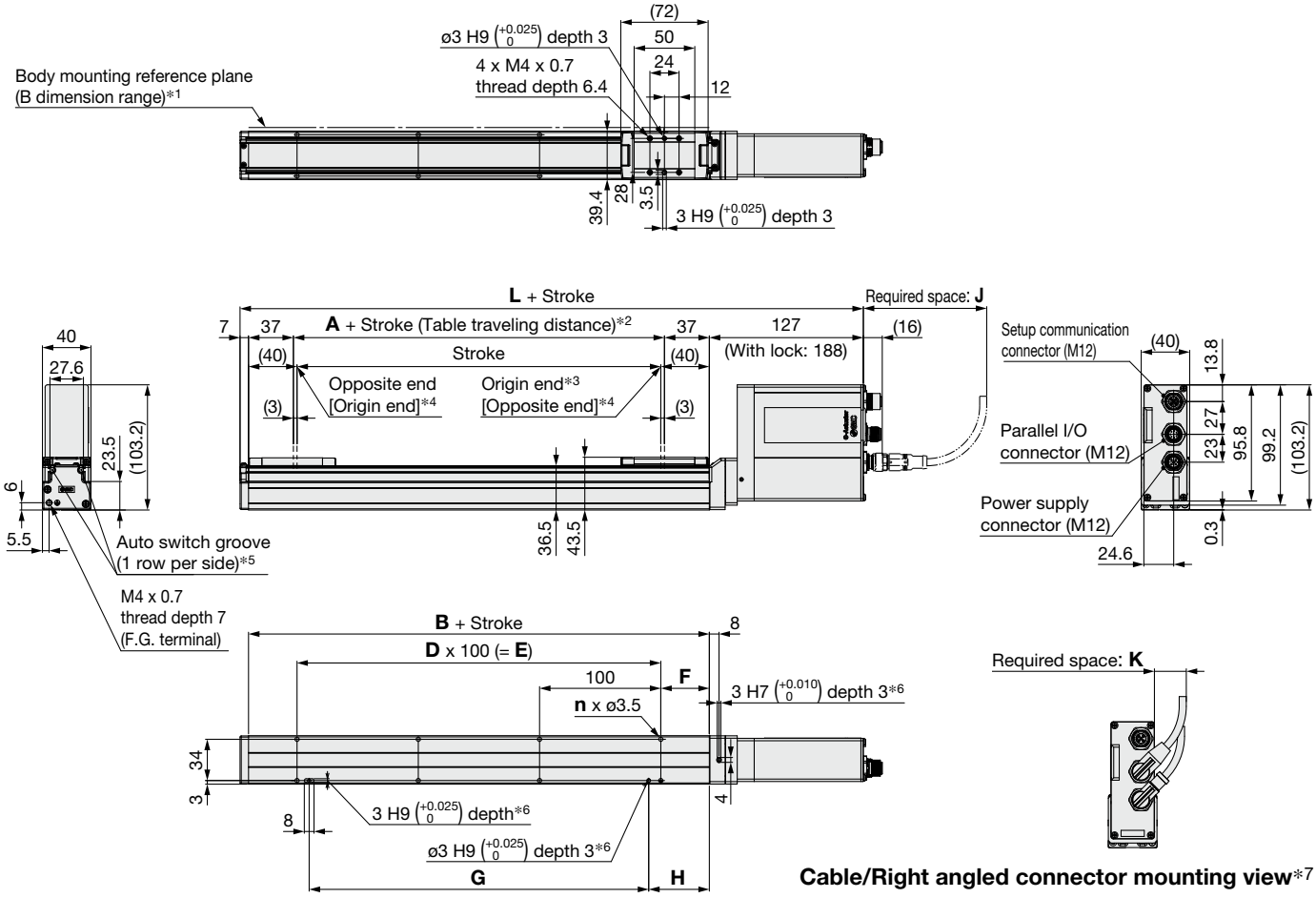

Cable/Right angled connector mounting view*7

Required Space*7 [mm]

Cable connector type	J
Straight	115

*1 When mounting the actuator using the body mounting reference plane, set the height of the opposite surface or pin to be 3 mm or more. (Recommended height: 5 mm)
In addition, be aware that surfaces other than the body mounting reference plane (B dimension range) may slightly protrude from the body mounting reference plane. Be sure to provide a clearance of 1 mm or more to avoid interference with workpieces, facilities, etc.
*2 The distance the table moves according to movement instructions
Make sure that workpieces mounted on the table do not interfere with other workpieces or the facilities around the table.
*3 Indicates the factory default origin position (0 mm)
*4 [ ] refers to when the rotation direction reference is changed.
*5 The applicable auto switch (D-M9□) should be ordered separately.
*6 When using the positioning pin holes on the bottom, use either the one on the body side or the one on the housing side.
*7 The amount of space required to connect the various cables and mount the product
Provide this amount of space for cable handling.

Dimensions [mm]

Stroke [mm]	L		A	B	n	D	E	F	G	H
	Without lock	With lock								
50	214	275	6	80	4	–	–	15	80	25
100, 150								40		50
200, 250					6	2	200		180	
300, 350					8	3	300		280	
400, 450					10	4	400		380	
500					12	5	500		480	

Dimensions: In-line Motor

EQFS25H

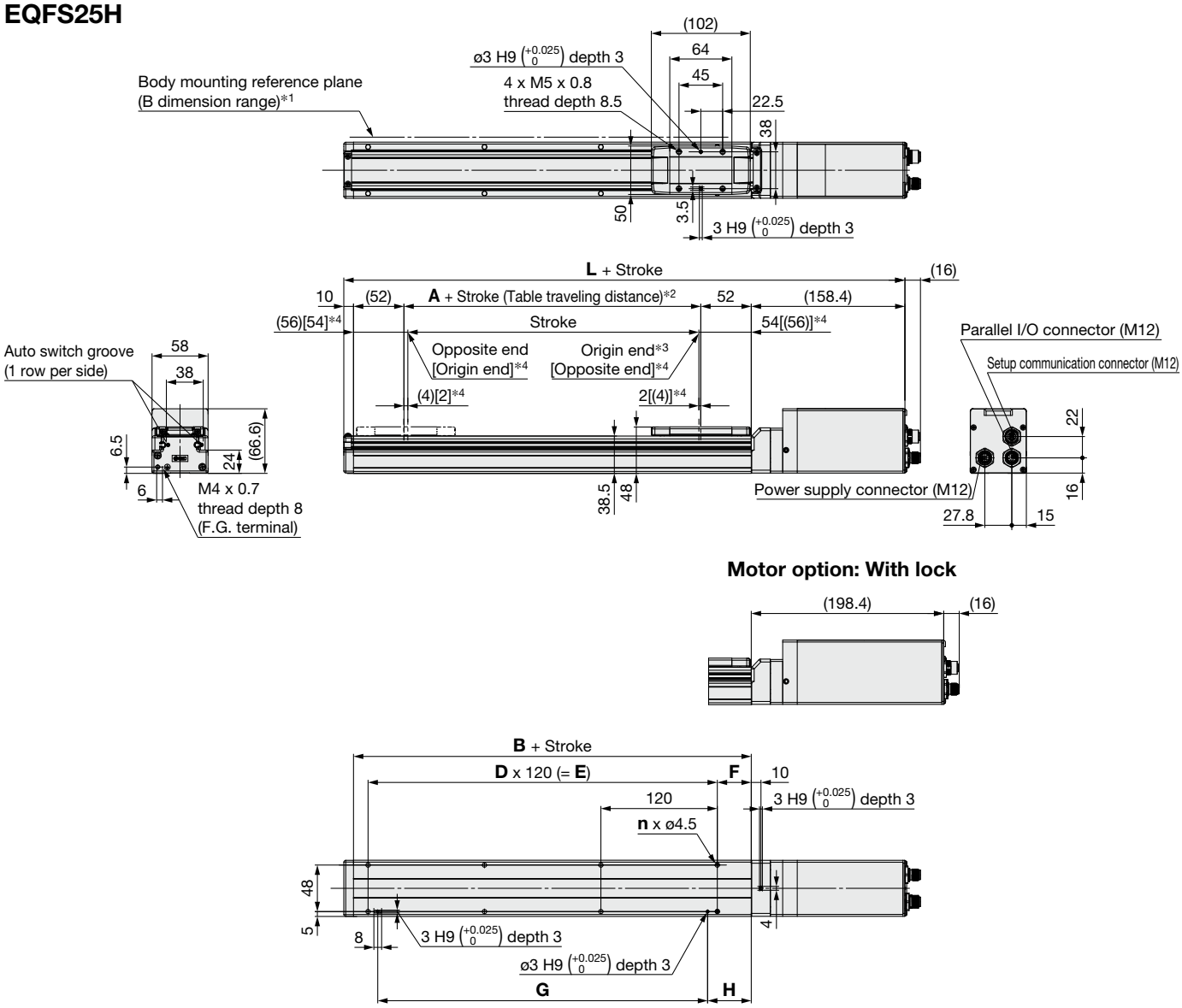

*1 When mounting the actuator using the body mounting reference plane, set the height of the opposite surface or pin to be 3 mm or more. (Recommended height: 5 mm)
In addition, be aware that surfaces other than the body mounting reference plane (B dimension range) may slightly protrude from the body mounting reference plane. Be sure to provide a clearance of 1 mm or more to avoid interference with workpieces, facilities, etc.
*2 The distance the table moves according to movement instructions
Make sure that workpieces mounted on the table do not interfere with other workpieces or the facilities around the table.
*3 Indicates the factory default origin position (0 mm)
*4 [ ] refers to when the rotation direction reference is changed.

Dimensions

[mm]

Stroke [mm]	L Without lock	L With lock	A	B	n	D	E	F	G	H
50	278.4	318.4	6	110	4	—	—	20	100	30
100, 150								35		45
200, 250					6	2	240		220	
300, 350, 400					8	3	360		340	
450, 500					10	4	480		460	
550, 600, 650					12	5	600		580	
700, 750					14	6	720		700	
800					16	7	840		820	

Dimensions: In-line Motor

EQFS32H

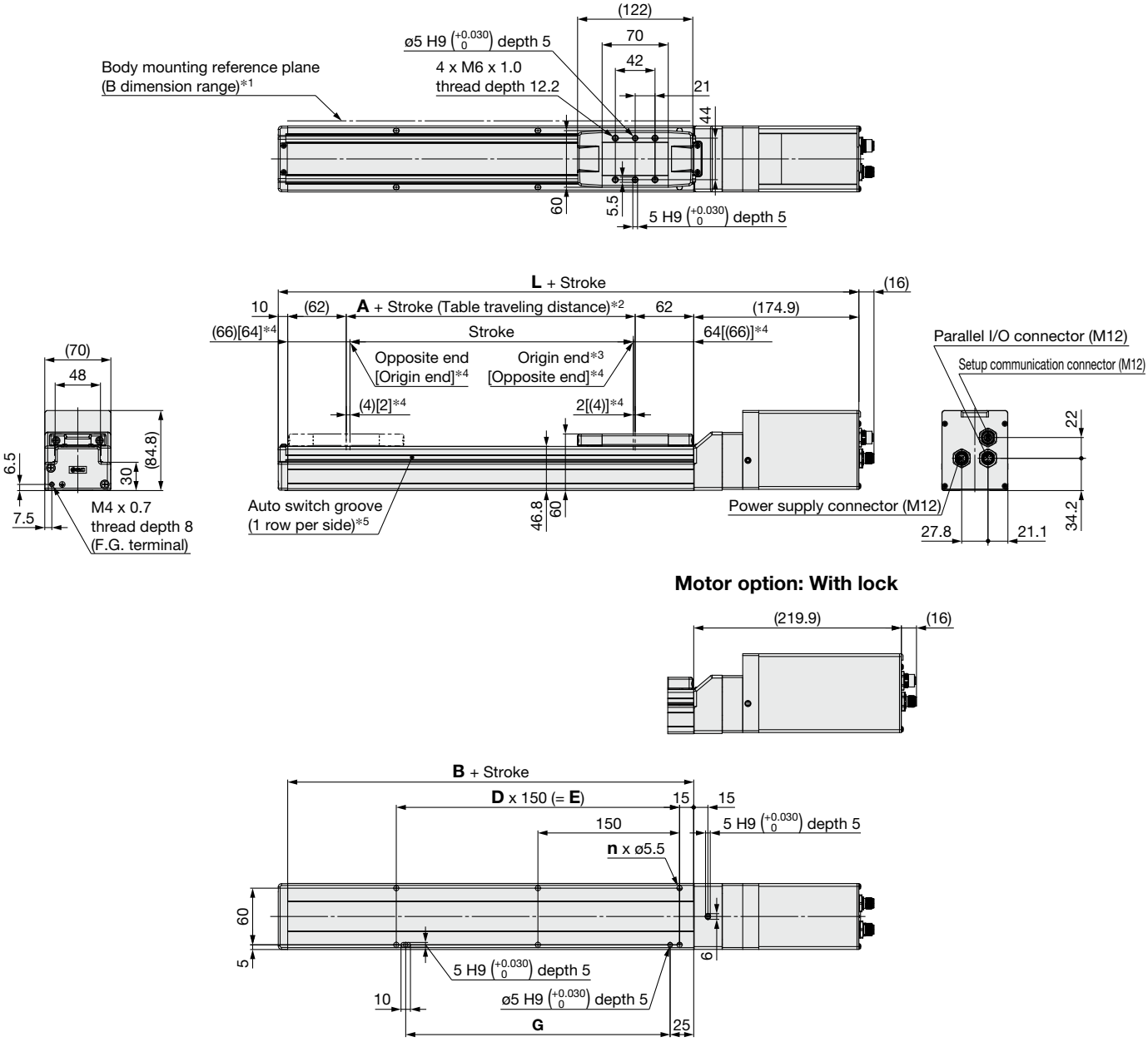

*1 When mounting the actuator using the body mounting reference plane, set the height of the opposite surface or pin to be 3 mm or more. (Recommended height: 5 mm)
In addition, be aware that surfaces other than the body mounting reference plane (B dimension range) may slightly protrude from the body mounting reference plane. Be sure to provide a clearance of 1 mm or more to avoid interference with workpieces, facilities, etc.
*2 The distance the table moves according to movement instructions
Make sure that workpieces mounted on the table do not interfere with other workpieces or the facilities around the table.
*3 Indicates the factory default origin position (0 mm)
*4 [ ] refers to when the rotation direction reference is changed.
*5 A switch spacer (BMY3-016) is required to secure auto switches. Please order it separately.

Dimensions

[mm]

Stroke [mm]	L		A	B	n	D	E	G
	Without lock	With lock						
50, 100, 150	314.9	359.9	6	130	4	—	—	130
200, 250, 300					6	2	300	280
350, 400, 450					8	3	450	430
500, 550, 600					10	4	600	580
650, 700, 750					12	5	750	730
800, 850, 900					14	6	900	880
950, 1000					16	7	1050	1030

Dimensions: In-line Motor

EQFS40H

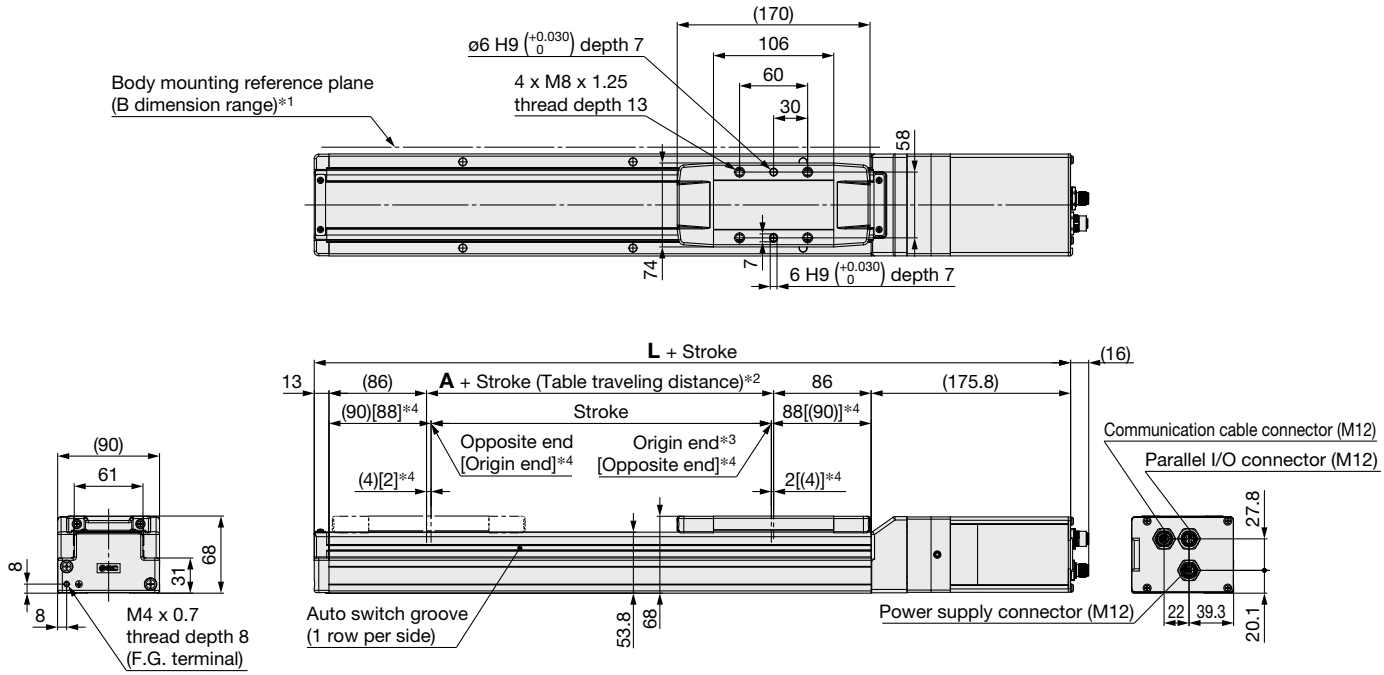

Motor option: With lock

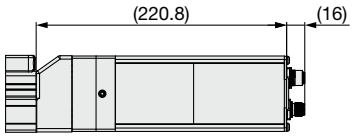

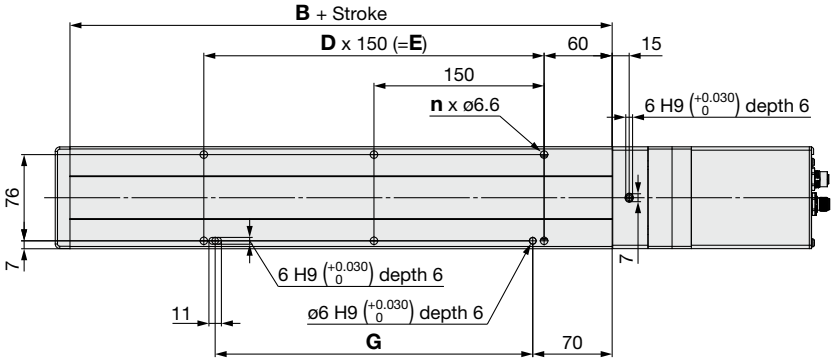

*1 When mounting the actuator using the body mounting reference plane, set the height of the opposite surface or pin to be 3 mm or more. (Recommended height: 5 mm)
In addition, be aware that surfaces other than the body mounting reference plane (B dimension range) may slightly protrude from the body mounting reference plane. Be sure to provide a clearance of 1 mm or more to avoid interference with workpieces, facilities, etc.
*2 The distance the table moves according to movement instructions
Make sure that workpieces mounted on the table do not interfere with other workpieces or the facilities around the table.
*3 Indicates the factory default origin position (0 mm)
*4 [ ] refers to when the rotation direction reference is changed.
* A switch spacer (BMY3-016) is required to secure auto switches. Please order it separately.

Dimensions

[mm]

Stroke [mm]	L		A	B	n	D	E	G
	Without lock	With lock						
150	366.8	411.8	6	178	4	—	—	130
200, 250, 300					6	2	300	280
350, 400, 450					8	3	450	430
500, 550, 600					10	4	600	580
650, 700, 750					12	5	750	730
800, 850, 900					14	6	900	880
950, 1000					16	7	1050	1030
1100, 1200					18	8	1200	1180

Dimensions: Right/Left Side Parallel Motor

EQFS16RH

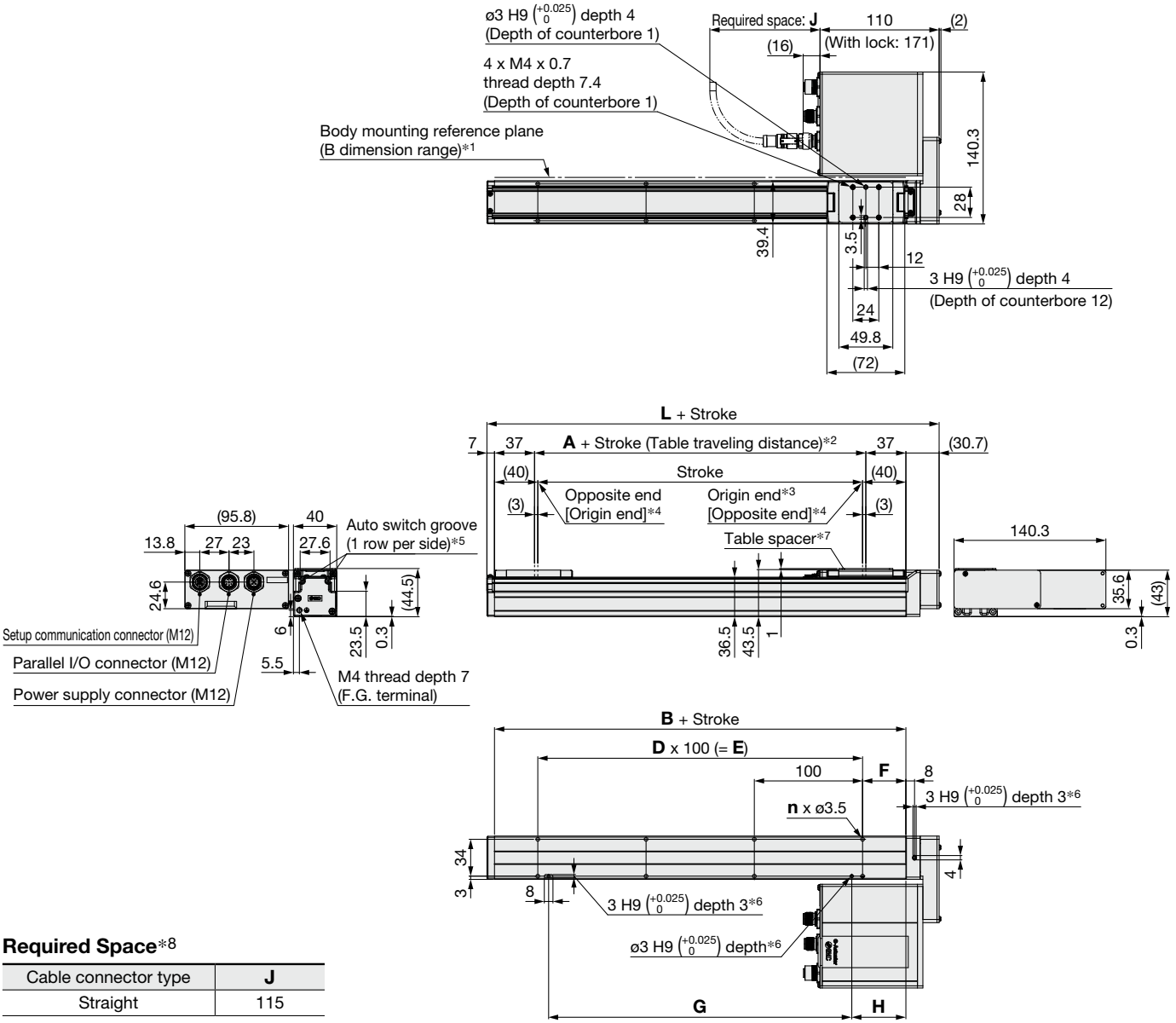

Required Space*8

Cable connector type	J
Straight	115

*1 When mounting the actuator using the body mounting reference plane, set the height of the opposite surface or pin to be 3 mm or more. (Recommended height: 5 mm)
In addition, be aware that surfaces other than the body mounting reference plane (B dimension range) may slightly protrude from the body mounting reference plane. Be sure to provide a clearance of 1 mm or more to avoid interference with workpieces, facilities, etc.
*2 The distance the table moves according to movement instructions
Make sure that workpieces mounted on the table do not interfere with other workpieces or the facilities around the table.
*3 Indicates the factory default origin position (0 mm)
*4 [ ] refers to when the rotation direction reference is changed.
*5 The applicable auto switch (D-M9□) should be ordered separately.
*6 When using the positioning pin holes on the bottom, use either the one on the body side or the one on the housing side.
*7 The table spacer is shipped together with the product but does not come assembled.
*8 The amount of space required to connect the various cables and mount the product
Provide this amount of space for cable handling.

Dimensions

[mm]

Stroke [mm]	L	A	B	n	D	E	F	G	H
50	117.7	6	90	4	—	—	15	80	25
100, 150							40		50
200, 250				6	2	200		180	
300, 350				8	3	300		280	
400, 450				10	4	400		380	
500				12	5	500		480	

Dimensions: Right/Left Side Parallel Motor

EQFS25RH

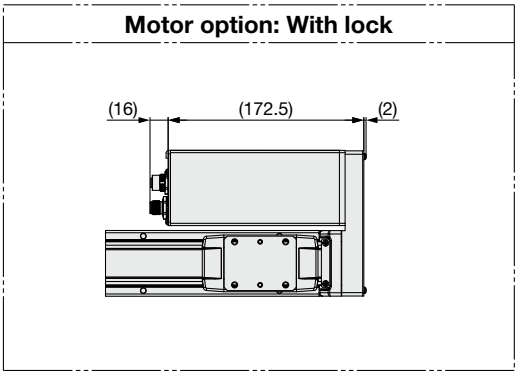

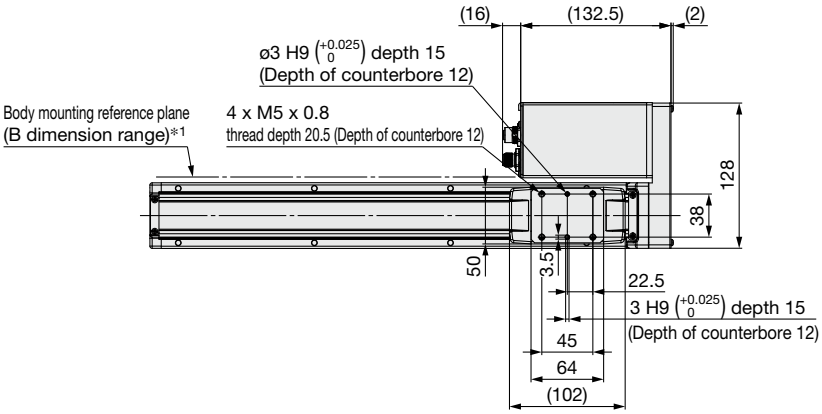

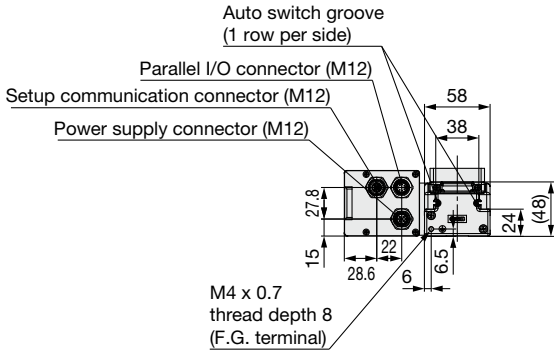

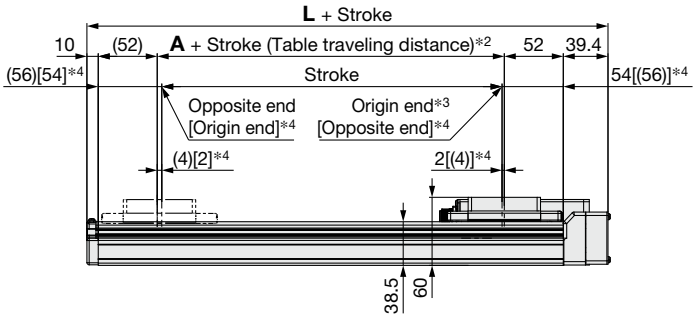

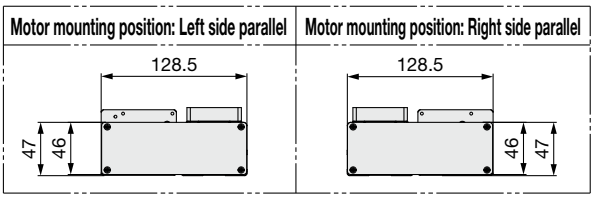

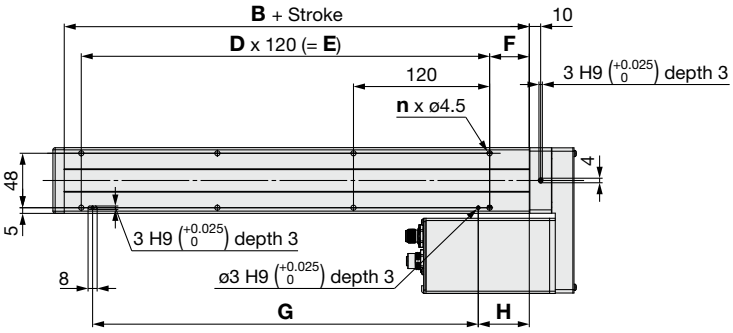

*1 When mounting the actuator using the body mounting reference plane, set the height of the opposite surface or pin to be 3 mm or more. (Recommended height: 5 mm)
In addition, be aware that surfaces other than the body mounting reference plane (B dimension range) may slightly protrude from the body mounting reference plane. Be sure to provide a clearance of 1 mm or more to avoid interference with workpieces, facilities, etc.
*2 The distance the table moves according to movement instructions
Make sure that workpieces mounted on the table do not interfere with other workpieces or the facilities around the table.
*3 Indicates the factory default origin position (0 mm)
*4 [ ] refers to when the rotation direction reference is changed.

Dimensions

[mm]

Stroke [mm]	L	A	B	n	D	E	F	G	H
50	159.4	6	110	4	—	—	20	100	30
100, 150							35		45
200, 250				6	2	240		220	
300, 350, 400				8	3	360		340	
450, 500				10	4	480		460	
550, 600, 650				12	5	600		580	
700, 750				14	6	720		700	
800				16	7	840		820	

Dimensions: Right/Left Side Parallel Motor

EQFS32RH

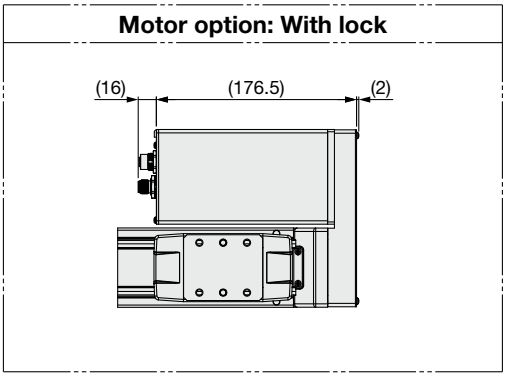

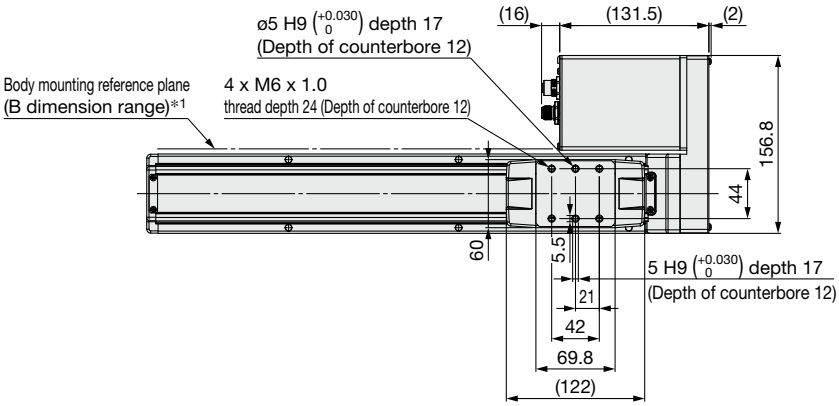

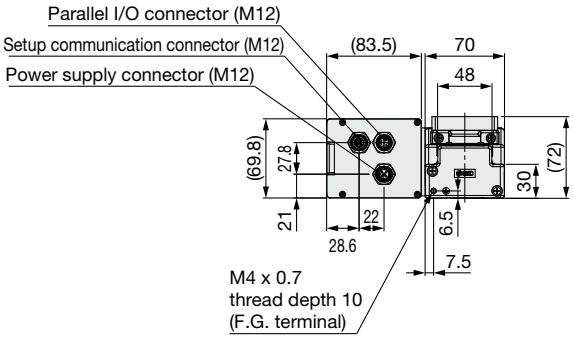

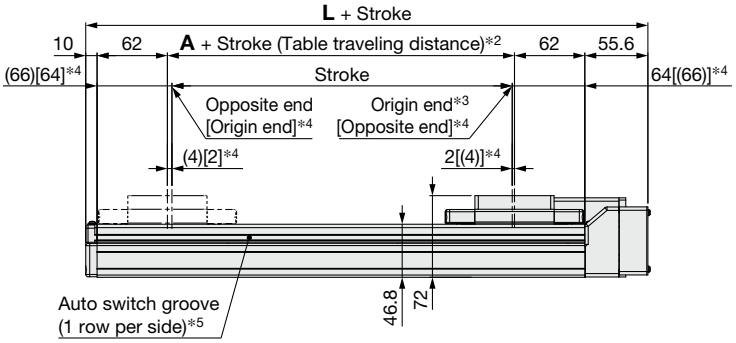

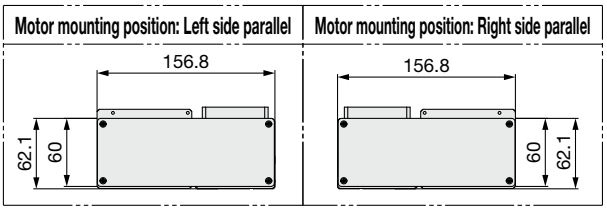

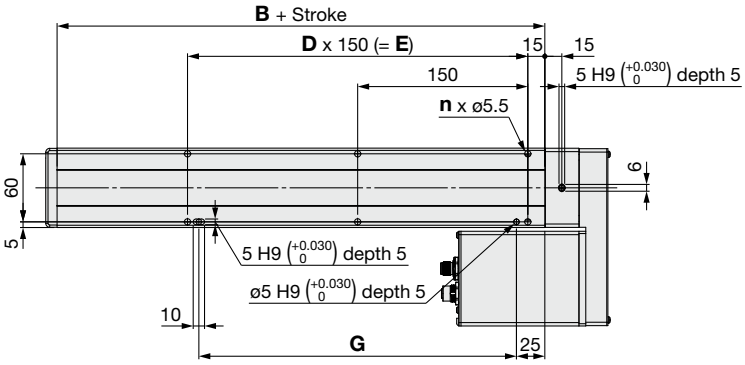

*1 When mounting the actuator using the body mounting reference plane, set the height of the opposite surface or pin to be 3 mm or more. (Recommended height: 5 mm)
In addition, be aware that surfaces other than the body mounting reference plane (B dimension range) may slightly protrude from the body mounting reference plane. Be sure to provide a clearance of 1 mm or more to avoid interference with workpieces, facilities, etc.
*2 The distance the table moves according to movement instructions
Make sure that workpieces mounted on the table do not interfere with other workpieces or the facilities around the table.
*3 Indicates the factory default origin position (0 mm)
*4 [ ] refers to when the rotation direction reference is changed.
*5 A switch spacer (BMY3-016) is required to secure auto switches. Please order it separately.

Dimensions

[mm]

Stroke [mm]	L	A	B	n	D	E	G
50, 100, 150	195.6	6	130	4	—	—	130
200, 250, 300				6	2	300	280
350, 400, 450				8	3	450	430
500, 550, 600				10	4	600	580
650, 700, 750				12	5	750	730
800, 850, 900				14	6	900	880
950, 1000				16	7	1050	1030

Dimensions: Right/Left Side Parallel Motor

EQFS40RH

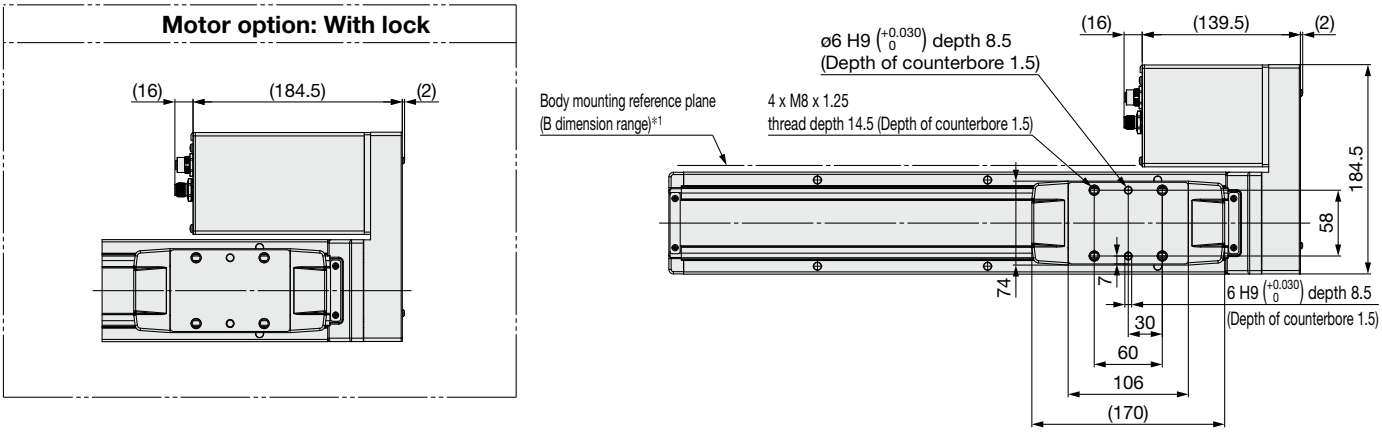

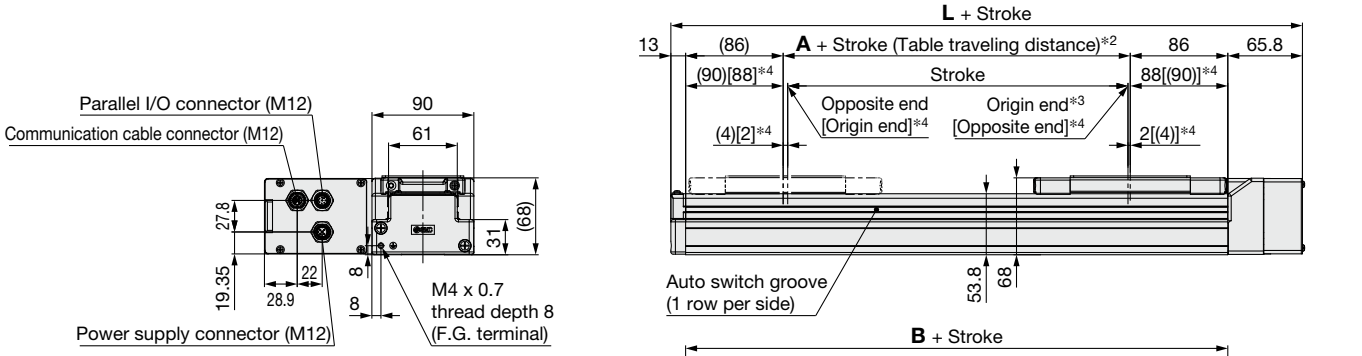

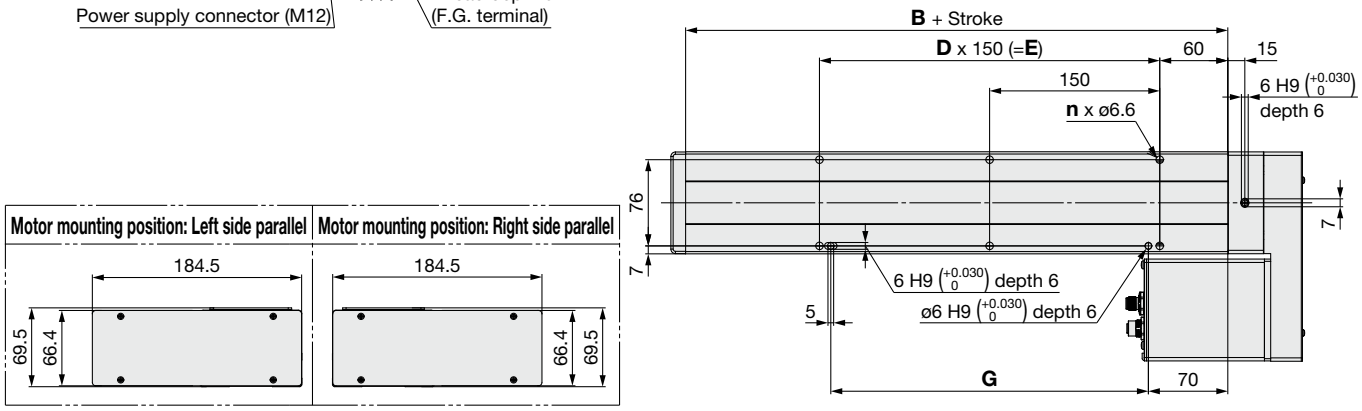

*1 When mounting the actuator using the body mounting reference plane, set the height of the opposite surface or pin to be 3 mm or more. (Recommended height: 5 mm)
In addition, be aware that surfaces other than the body mounting reference plane (B dimension range) may slightly protrude from the body mounting reference plane. Be sure to provide a clearance of 1 mm or more to avoid interference with workpieces, facilities, etc.
*2 The distance the table moves according to movement instructions
Make sure that workpieces mounted on the table do not interfere with other workpieces or the facilities around the table.
*3 Indicates the factory default origin position (0 mm)
*4 [ ] refers to when the rotation direction reference is changed.
* A switch spacer (BMY3-016) is required to secure auto switches. Please order it separately.

Dimensions

[mm]

Stroke [mm]	L	A	B	n	D	E	G
150	256.8	6	178	4	—	—	130
200, 250, 300				6	2	300	280
350, 400, 450				8	3	450	430
500, 550, 600				10	4	600	580
650, 700, 750				12	5	750	730
800, 850, 900				14	6	900	880
950, 1000				16	7	1050	1030
1100, 1200				18	8	1200	1180

Auto Switch Mounting

Auto Switch Proper Mounting Position

Applicable auto switch: D-M9□, D-M9□E(V), D-M9□W

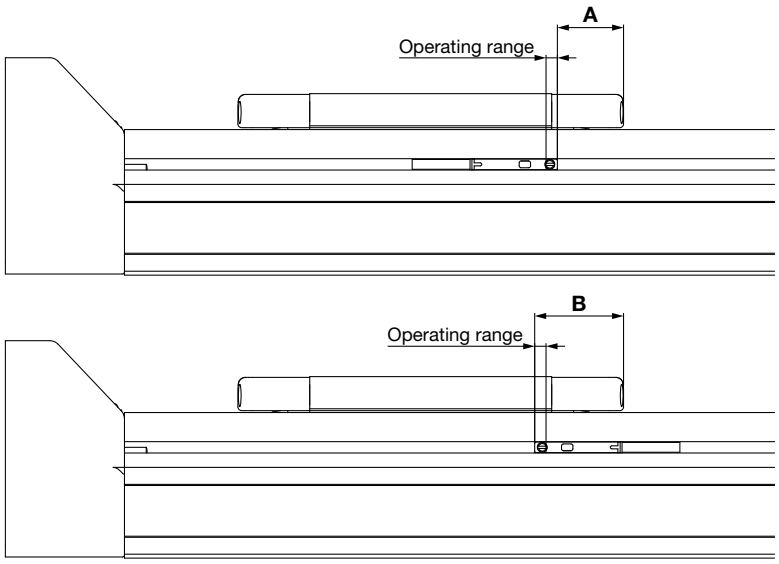

[mm]

Size	A	B	Operating range
16	12.5	24.5	3.0
25	17.5	23.5	3.0
32	26.3	32.3	3.4
40	32.2	38.2	3.6

∗ The operating range is a guideline including hysteresis, not meant to be guaranteed. There may be large variations depending on the ambient environment.
∗ Adjust the auto switch after confirming the operating conditions in the actual setting.

Auto Switch Mounting

EQFS16/25H

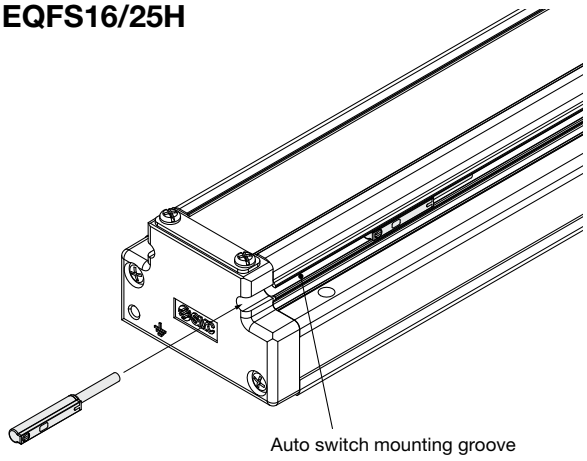

EQFS32/40H

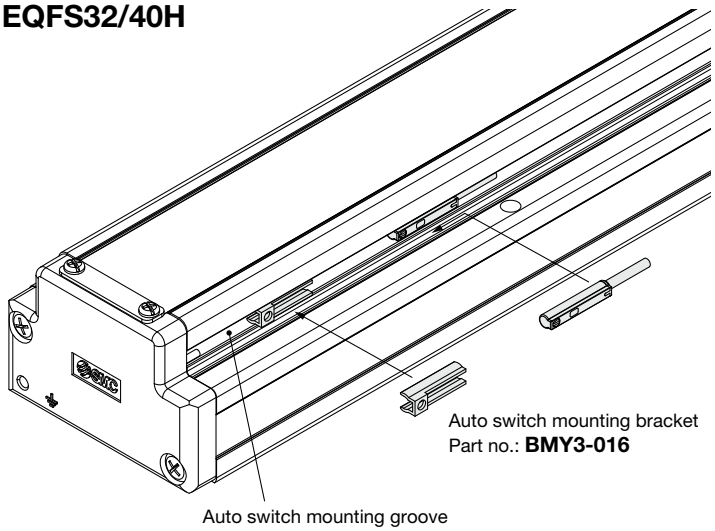

Tightening Torque for Auto Switch Mounting Screw [N·m]

Auto switch model	Tightening torque
D-M9□ **D-M9□E(V)** **D-M9□W**	0.1 to 0.15

∗ When tightening the auto switch mounting screw (included with the auto switch), use a watchmaker's screwdriver with a handle diameter of 5 to 6 mm.
∗ Prepare an auto switch mounting bracket (BMY3-016) when mounting the auto switch on to the EQFS32/40H.

Solid State Auto Switch Direct Mounting Type
D-M9N/D-M9P/D-M9B

Refer to the SMC website for details on products that are compliant with international standards.

Grommet

- **2-wire load current is reduced (2.5 to 40 mA).**
- **Using flexible cable as standard spec.**

Auto Switch Specifications

PLC: Programmable Logic Controller

D-M9□ (With indicator light)			
Auto switch model	**D-M9N**	**D-M9P**	**D-M9B**
Electrical entry direction	In-line		
Wiring type	3-wire		2-wire
Output type	NPN	PNP	—
Applicable load	IC circuit, Relay, PLC		24 VDC relay, PLC
Power supply voltage	5, 12, 24 VDC (4.5 to 28 V)		—
Current consumption	10 mA or less		—
Load voltage	28 VDC or less	—	24 VDC (10 to 28 VDC)
Load current	40 mA or less		2.5 to 40 mA
Internal voltage drop	0.8 V or less at 10 mA (2 V or less at 40 mA)		4 V or less
Leakage current	100 μA or less at 24 VDC		0.8 mA or less
Indicator light	Red LED illuminates when turned ON.		
Standard	CE/UKCA marking		

⚠Caution

Precautions

Fix the auto switch with the existing screw installed on the auto switch body. The auto switch may be damaged if a screw other than the one supplied is used.

Oilproof Flexible Heavy-duty Lead Wire Specifications

Auto switch model		**D-M9N**	**D-M9P**	**D-M9B**
Sheath	Outside diameter [mm]	ø2.6		
Insulator	Number of cores	3 cores (Brown/Blue/Black)		2 cores (Brown/Blue)
	Outside diameter [mm]	ø0.88		
Conductor	Effective area [mm²]	0.15		
	Strand diameter [mm]	ø0.05		
Min. bending radius [mm] (Reference values)		17		

∗ Refer to the **Web Catalog** for solid state auto switch common specifications.
∗ Refer to the **Web Catalog** for lead wire lengths.

Weight

[g]

Auto switch model		**D-M9N**	**D-M9P**	**D-M9B**
Lead wire length	0.5 m (**Nil**)	8		7
	1 m (**M**)	14		13
	3 m (**L**)	41		38
	5 m (**Z**)	68		63

Dimensions

[mm]

D-M9□

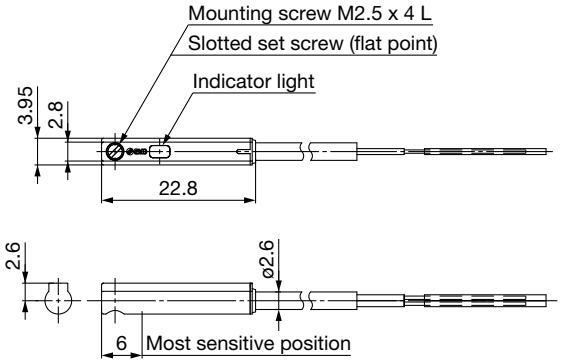

Normally Closed Solid State Auto Switch Direct Mounting Type
D-M9NE(V)/D-M9PE(V)/D-M9BE(V)

Refer to the SMC website for details on products that are compliant with international standards.

Grommet

- **Output signal turns on when no magnetic force is detected.**
- **Can be used for the actuator adopted by the solid state auto switch D-M9 series (excluding special order products)**

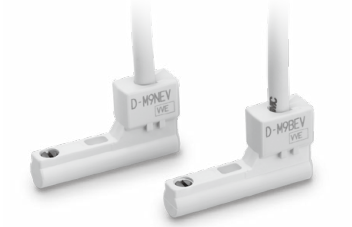

⚠Caution

Precautions

Fix the auto switch with the existing screw installed on the auto switch body. The auto switch may be damaged if a screw other than the one supplied is used.

Auto Switch Specifications

PLC: Programmable Logic Controller

D-M9□E, D-M9□EV (With indicator light)						
Auto switch model	D-M9NE	D-M9NEV	D-M9PE	D-M9PEV	D-M9BE	D-M9BEV
Electrical entry direction	In-line	Perpendicular	In-line	Perpendicular	In-line	Perpendicular
Wiring type	3-wire				2-wire	
Output type	NPN		PNP		—	
Applicable load	IC circuit, Relay, PLC				24 VDC relay, PLC	
Power supply voltage	5, 12, 24 VDC (4.5 to 28 V)				—	
Current consumption	10 mA or less				—	
Load voltage	28 VDC or less		—		24 VDC (10 to 28 VDC)	
Load current	40 mA or less				2.5 to 40 mA	
Internal voltage drop	0.8 V or less at 10 mA (2 V or less at 40 mA)				4 V or less	
Leakage current	100 μA or less at 24 VDC				0.8 mA or less	
Indicator light	Red LED illuminates when turned ON.					
Standard	CE/UKCA marking					

Oilproof Flexible Heavy-duty Lead Wire Specifications

Auto switch model		D-M9NE(V)	D-M9PE(V)	D-M9BE(V)
Sheath	Outside diameter [mm]	ø2.6		
Insulator	Number of cores	3 cores (Brown/Blue/Black)		2 cores (Brown/Blue)
	Outside diameter [mm]	ø0.88		
Conductor	Effective area [mm²]	0.15		
	Strand diameter [mm]	ø0.05		
Min. bending radius [mm] (Reference values)		17		

∗ Refer to the **Web Catalog** for solid state auto switch common specifications.
∗ Refer to the **Web Catalog** for lead wire lengths.

Weight

[g]

Auto switch model		D-M9NE(V)	D-M9PE(V)	D-M9BE(V)
Lead wire length	0.5 m (**Nil**)	8		7
	1 m (**M**)∗1	14		13
	3 m (**L**)	41		38
	5 m (**Z**)∗1	68		63

∗1 The 1 m and 5 m options are produced upon receipt of order.

Dimensions

[mm]

D-M9□E

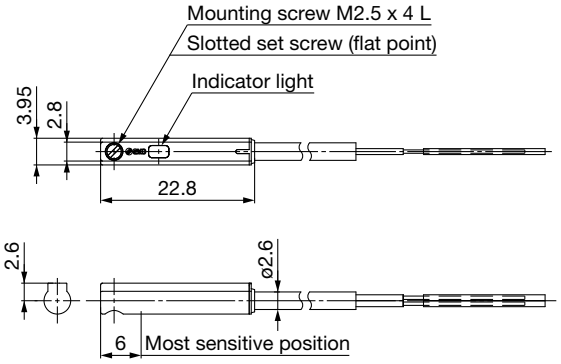

D-M9□EV

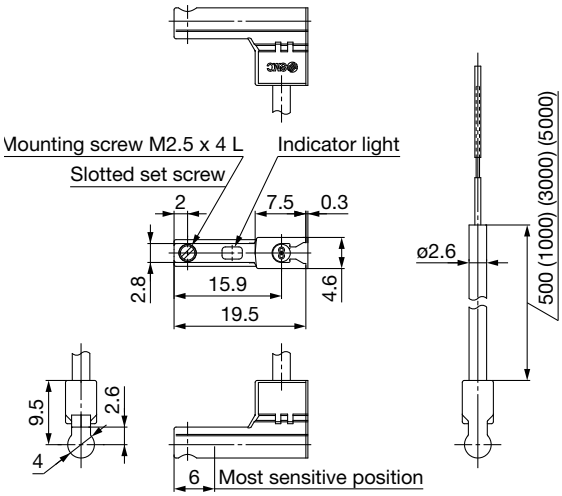

2-Color Indicator Solid State Auto Switch Direct Mounting Type
D-M9NW/D-M9PW/D-M9BW

Refer to the SMC website for details on products that are compliant with international standards.

Grommet

- **2-wire load current is reduced (2.5 to 40 mA).**
- **Using flexible cable as standard spec.**
- **The proper operating range can be determined by the color of the light. (Red → Green ← Red)**

⚠Caution

Precautions

Fix the auto switch with the existing screw installed on the auto switch body. The auto switch may be damaged if a screw other than the one supplied is used.

Auto Switch Specifications

PLC: Programmable Logic Controller

D-M9□W (With indicator light)			
Auto switch model	**D-M9NW**	**D-M9PW**	**D-M9BW**
Electrical entry direction	In-line		
Wiring type	3-wire		2-wire
Output type	NPN	PNP	—
Applicable load	IC circuit, Relay, PLC		24 VDC relay, PLC
Power supply voltage	5, 12, 24 VDC (4.5 to 28 V)		—
Current consumption	10 mA or less		—
Load voltage	28 VDC or less	—	24 VDC (10 to 28 VDC)
Load current	40 mA or less		2.5 to 40 mA
Internal voltage drop	0.8 V or less at 10 mA (2 V or less at 40 mA)		4 V or less
Leakage current	100 μA or less at 24 VDC		0.8 mA or less
Indicator light	Operating range ····· Red LED illuminates. Proper operating range ····· Green LED illuminates.		
Standard	CE/UKCA marking		

Oilproof Flexible Heavy-duty Lead Wire Specifications

Auto switch model		**D-M9NW**	**D-M9PW**	**D-M9BW**
Sheath	Outside diameter [mm]	ø2.6		
Insulator	Number of cores	3 cores (Brown/Blue/Black)		2 cores (Brown/Blue)
	Outside diameter [mm]	ø0.88		
Conductor	Effective area [mm²]	0.15		
	Strand diameter [mm]	ø0.05		
Min. bending radius [mm] (Reference values)		17		

∗ Refer to the **Web Catalog** for solid state auto switch common specifications.
∗ Refer to the **Web Catalog** for lead wire lengths.

Weight

[g]

Auto switch model		**D-M9NW**	**D-M9PW**	**D-M9BW**
Lead wire length	0.5 m (**Nil**)	8		7
	1 m (**M**)	14		13
	3 m (**L**)	41		38
	5 m (**Z**)	68		63

Dimensions

[mm]

D-M9□W

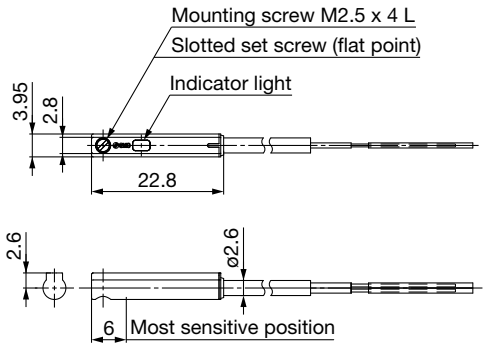

Slider Type/*EQFS□H Series*
Integrated Controller Electric Actuator Specific Product Precautions 1

Be sure to read this before handling the products. Refer to the back cover for safety instructions. For electric actuator and auto switch precautions, refer to the "Handling Precautions for SMC Products" and the "Operation Manual" on the SMC website: https://www.smcworld.com

Design

⚠Caution

1. Do not apply a load in excess of the specification limits.

Select a suitable actuator by work load and allowable moment. If a load in excess of the specification limits is applied to the guide, adverse effects such as the generation of play in the guide, reduced accuracy, or reduced service life of the product may occur.

2. Do not use the product in applications where excessive external force or impact force is applied to it.

This can cause a malfunction.

Selection

⚠Warning

1. Do not increase the speed in excess of the specification limits.

Select a suitable actuator by the relationship between the allowable work load and speed, and the allowable speed of each stroke. If the product is used outside of the specification limits, adverse effects such as the generation of noise, reduced accuracy, or reduced service life of the product may occur.

2. Do not use the product in applications where excessive external force or impact force is applied to it.

This can cause a malfunction.

3. When the product repeatedly cycles with partial strokes (see the table below), operate it at a full stroke at least once every few dozen cycles.

Failure to do so may result in the product running out of lubrication.

Model	Partial stroke
EQFS16	50 mm or less
EQFS25	65 mm or less
EQFS32	70 mm or less
EQFS40	105 mm or less

4. When external force is to be applied to the table, it is necessary to add the external force to the work load as the total carried load when selecting a size.

When a cable duct or flexible moving tube is attached to the actuator, the sliding resistance of the table will increase, which may lead to the malfunction of the product.

Handling

⚠Caution

1. Set the [OUT signal output width] in the parameters to at least 0.5.

If it is set any lower, the completion signal of the [In position] may not be properly output.

2. OUT signal

1) Positioning operation

When the product comes within the set range of the parameter [OUT signal output width], the OUT signal will turn ON.

Initial value: Set to [0.50] or higher.

Handling

⚠Caution

3. Never allow the table to collide with the stroke end except during return to origin.

When incorrect instructions are inputted, such as those which cause the product to operate outside of the specification limits or outside of the actual stroke through changes in the controller/driver settings and/or origin position, the table may collide with the stroke end of the actuator. Be sure to check these points before use.

If the table collides with the stroke end of the actuator, the guide, belt, or internal stopper may break. This can result in abnormal operation.

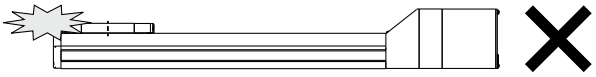

Handle the actuator with care when it is used in the vertical direction as the workpiece will fall freely from its own weight.

4. The actual speed of this actuator is affected by the work load and stroke.

Check the model selection section of the catalog.

5. Do not apply a load, impact, or resistance in addition to the transferred load during return to origin.

Additional force will cause the displacement of the origin position since it is based on the detected motor torque.

6. Do not dent, scratch, or cause other damage to the body or table mounting surfaces.

Doing so may cause unevenness in the mounting surface, play in the guide, or an increase in the sliding resistance.

7. Do not apply strong impact or an excessive moment while mounting a workpiece.

If an external force over the allowable moment is applied, it may cause play in the guide or an increase in the sliding resistance.

8. Keep the flatness of the mounting surface within 0.1 mm/500 mm.

If a workpiece or base does not sit evenly on the body of the product, play in the guide or an increase in the sliding resistance may occur.

9. When mounting the product, secure a bending diameter of 40 mm or longer for the cable.

10. Do not allow a workpiece to collide with the table during the positioning operation or within the positioning range.

11. For the model where grease is applied to the dust seal band for sliding, when wiping off the grease to remove foreign matter, etc., be sure to reapply grease afterward.

12. When bottom mounted, the dust seal band may become warped.

Slider Type/*EQFS□H Series*
Integrated Controller Electric Actuator Specific Product Precautions 2

Be sure to read this before handling the products. Refer to the back cover for safety instructions. For electric actuator and auto switch precautions, refer to the "Handling Precautions for SMC Products" and the "Operation Manual" on the SMC website: https://www.smcworld.com

Handling

⚠Caution

13. When mounting the product, use screws of adequate length and tighten them with adequate torque.

Tightening the screws with a higher torque than recommended may result in a malfunction and/or decrease in guide accuracy, while tightening with a lower torque can result in the displacement of the mounting position or, in extreme conditions, the actuator could become detached from its mounting position.

Body fixed

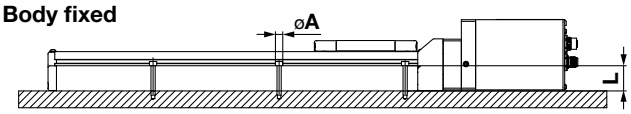

Model	Screw size	Max. tightening torque [N·m]	øA [mm]	L [mm]
EQFS16	M3	0.6	3.5	23.5
EQFS25	M4	1.5	4.5	24
EQFS32	M5	3.0	5.5	30
EQFS40	M6	5.2	6.6	31

Body mounting

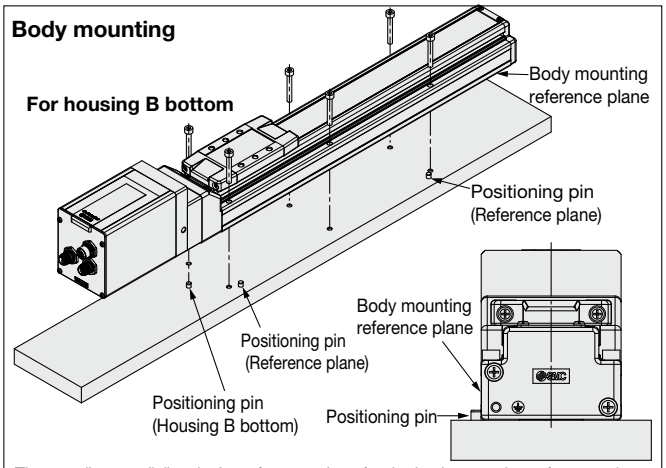

The traveling parallelism is the reference plane for the body mounting reference plane. If the traveling parallelism for a table is required, set the reference plane against parallel pins, etc.

For body bottom

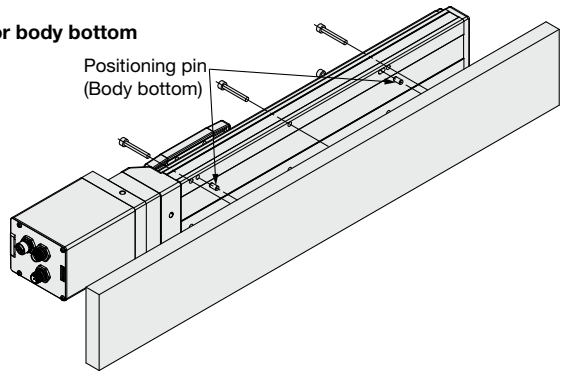

Workpiece fixed

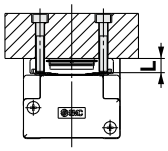

Model	Screw size	Max. tightening torque [N·m]	L (Max. screw-in depth) [mm]
EQFS16	M4 x 0.7	1.5	6
EQFS25	M5 x 0.8	3.0	8
EQFS32	M6 x 1	5.2	9
EQFS40	M8 x 1.25	12.5	13

To prevent the workpiece retaining screws from touching the body, use screws that are 0.5 mm or shorter than the maximum screw-in depth. If long screws are used, they may touch the body and cause a malfunction.

14. Do not operate by fixing the table and moving the actuator body.

15. Check the specifications for the minimum speed of each actuator.

Failure to do so may result in unexpected malfunctions such as knocking.

Maintenance

⚠Warning

Maintenance frequency

Perform maintenance according to the table below.

Frequency	Appearance check	Internal check	Belt check
Inspection before daily operation	○	–	–
Inspection every 6 months/1000 km/ 5 million cycles*1	○	○	○

*1 Select whichever comes first.

- **Items for visual appearance check**
  1. Loose set screws, Abnormal amount of dirt, etc.
  2. Check for visible damage, Check of cable joint
  3. Vibration, Noise
- **Items for internal check**
  1. Lubricant condition on moving parts
  2. Loose or mechanical play in fixed parts or fixing screws
- **Items for belt check**

  Stop operation immediately and replace the belt when any of the following occur. In addition, ensure your operating environment and conditions satisfy the requirements specified for the product.

  a. Tooth shape canvas is worn out
  Canvas fiber becomes fuzzy, Rubber is coming off and the fiber has become whitish, Lines of fibers have become unclear

  b. Peeling off or wearing of the side of the belt
  Belt corner has become rounded and frayed threads stick out

  c. Belt is partially cut
  Belt is partially cut, Foreign matter caught in the teeth of other parts is causing damage

  d. A vertical line on belt teeth is visible
  Damage which is made when the belt runs on the flange

  e. Rubber back of the belt is softened and sticky

  f . Cracks on the back of the belt are visible

e-Actuator

Easy to Operate Integrated Controller / Rod Type

EQY□H Series

p. 37

Battery-less Absolute (Step Motor 24 VDC)

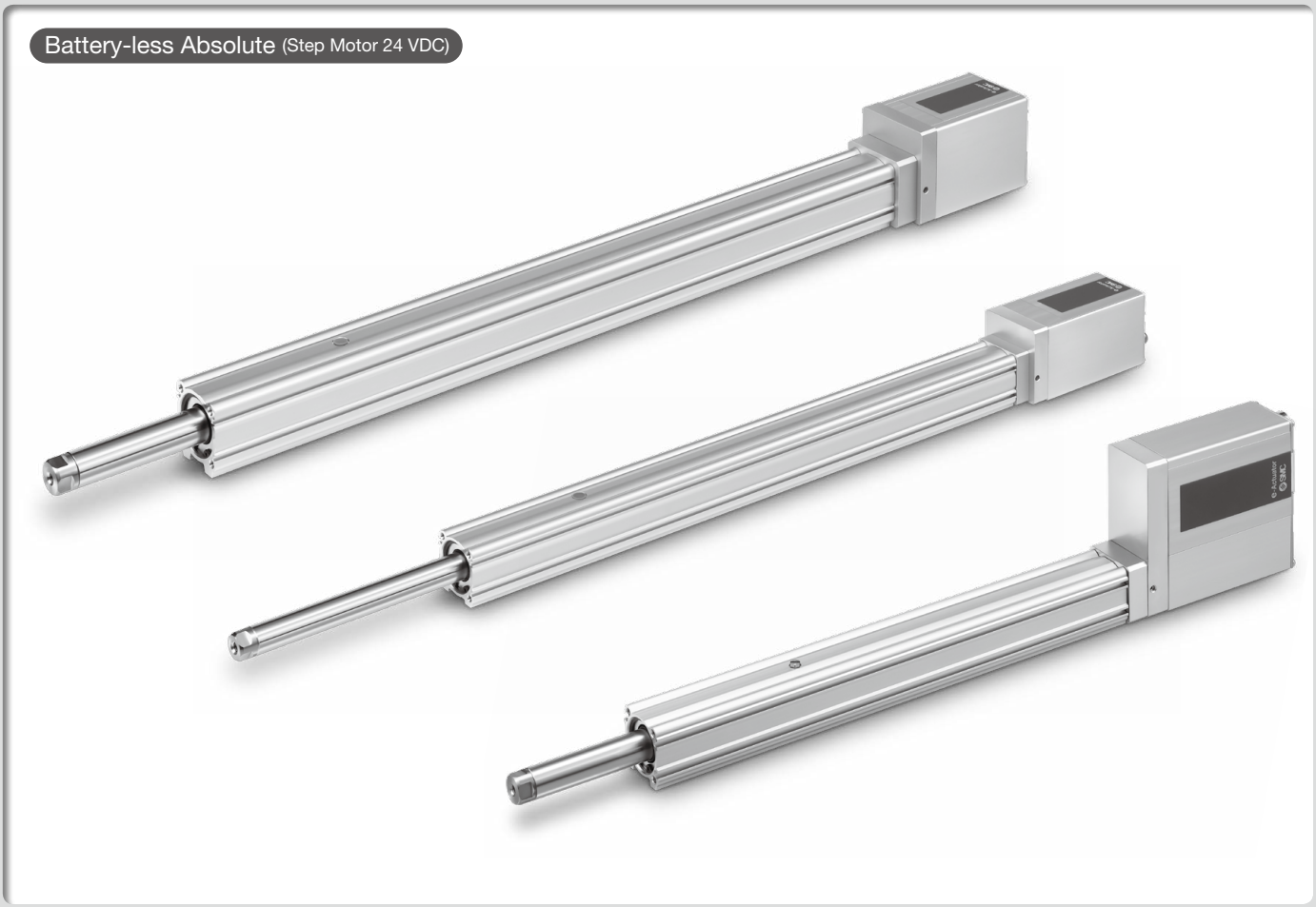

Model Selection

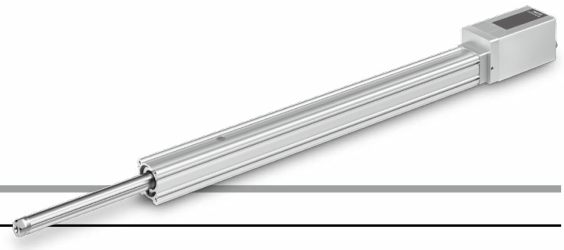

Selection Procedure

Positioning Control Selection Procedure

Step 1 Check the work load–speed. (Vertical transfer) → **Step 2** Check the cycle time.

Selection Example

Operating conditions

- Workpiece mass: 10 [kg]
- Speed: 100 [mm/s]
- Acceleration/Deceleration: 5000 [mm/s^2]
- Stroke: 200 [mm]
- Workpiece mounting condition: Vertical upward downward transfer

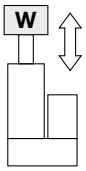

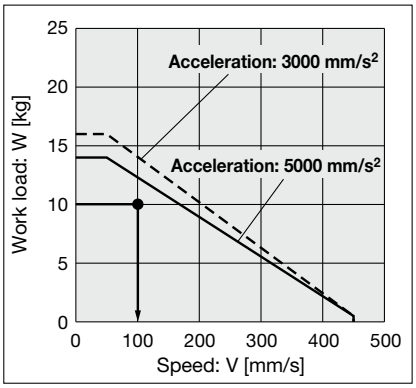

<Speed–Vertical work load graph> (EQY25HB/Step motor)

Step 1 **Check the work load–speed. <Speed–Vertical work load graph>**

Select a model based on the workpiece mass and speed while referencing the speed–vertical work load graph.

Selection example) The **EQY25DHB-200** can be temporarily selected as a possible candidate based on the graph shown on the right side.

* It is necessary to mount a guide outside the actuator when used for horizontal transfer. When selecting the target model, refer to the horizontal work load in the specifications on page 44 and the precautions.

Step 2 **Check the cycle time.**

Calculate **the cycle time** using the following calculation method.

Cycle time:

T can be found from the following equation.

$$T = T1 + T2 + T3 + T4 \text{ [s]}$$

- T1: Acceleration time and T3: Deceleration time can be found by the following equation.

$$T1 = V/a1 \text{ [s]} \qquad T3 = V/a2 \text{ [s]}$$

- T2: Constant speed time can be found from the following equation.

$$T2 = \frac{L - 0.5 \cdot V \cdot (T1 + T3)}{V} \text{ [s]}$$

- T4: Settling time varies depending on the conditions such as actuator types, load, and in position of the step data.
  Reference value for settling time: 0.15 s or less
  The following value is used for this calculation.

$$T4 = 0.15 \text{ [s]}$$

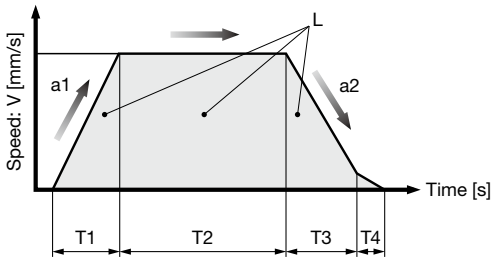

L : Stroke [mm] ··· (Operating condition)
V : Speed [mm/s] ··· (Operating condition)
a1: Acceleration [mm/s^2] ··· (Operating condition)
a2: Deceleration [mm/s^2] ··· (Operating condition)

T1: Acceleration time [s] ··· Time until reaching the set speed
T2: Constant speed time [s] ··· Time while the actuator is operating at a constant speed
T3: Deceleration time [s] ··· Time from the beginning of the constant speed operation to stop
T4: Settling time [s] ··· Time until positioning is completed

Calculation example)
T1 to T4 can be calculated as follows.

$$T1 = V/a1 = 100/5000 = 0.02 \text{ [s]}, \quad T3 = V/a2 = 100/5000 = 0.02 \text{ [s]}$$

$$T2 = \frac{L - 0.5 \cdot V \cdot (T1 + T3)}{V} = \frac{200 - 0.5 \cdot 100 \cdot (0.02 + 0.02)}{100} = 1.98 \text{ [s]}$$

$$T4 = 0.15 \text{ [s]}$$

The cycle time can be found as follows.

$T = T1 + T2 + T3 + T4 = 0.02 + 1.98 + 0.02 + 0.15 =$ **2.17 [s]**

Based on the above calculation result, the EQY25HB-200 should be selected.

Selection Procedure

Pushing Control Selection Procedure

Step 1 Check the duty ratio. → **Step 2** Check the pushing force. → **Step 3** Check the lateral load on the rod end.

∗ The duty ratio is a ratio of the operation time in one cycle.

Selection Example

Operating conditions

- Mounting condition: Horizontal (pushing)
- Duty ratio: 15 [%]
- Attachment weight: 0.2 [kg]
- Speed: 100 [mm/s]
- Pushing force: 100 [N]
- Stroke: 200 [mm]

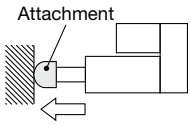

Step 1 **Check the duty ratio.**
<Conversion table of pushing force–duty ratio>

Select the [Pushing force] from the duty ratio while referencing the conversion table of pushing force–duty ratio.

Selection example)
Based on the table below,
- Duty ratio: 15 [%]

The pushing force set value will be 50 [%].

<Conversion table of pushing force–duty ratio>
(EQY25/Battery-less absolute)

Ambient temperature	Pushing force set value [%]	Duty ratio [%]	Continuous pushing time [min]
40°C or less	50 or less	100	—

∗ [Pushing force set value] is one of the step data input to the controller.
∗ [Continuous pushing time] is the time that the actuator can continuously keep pushing.

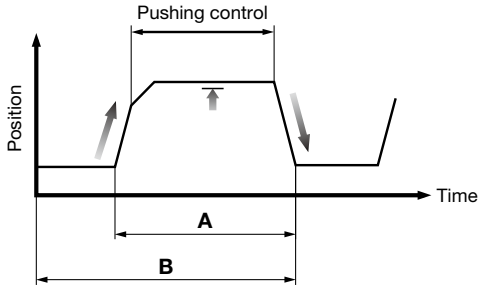

Duty ratio = A/B x 100 [%]

Step 2 **Check the pushing force.**
<Force conversion graph>

Select a model based on the pushing force set value and force while referencing the force conversion graph.

Selection example)
Based on the graph shown on the right side,
- Pushing force: 100 [N]
- Pushing force set value: 40 [%]

The **EQY25DHB** can be temporarily selected as a possible candidate.

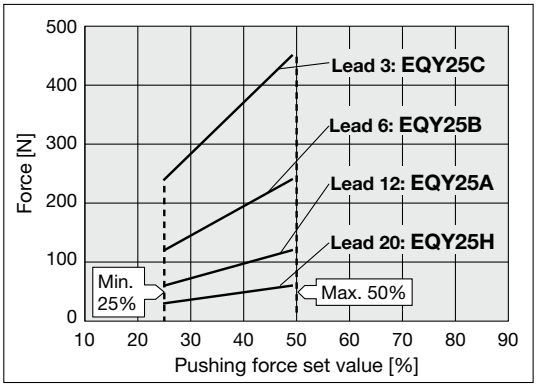

<Force conversion graph>
(EQY25□H/Step motor)

Step 3 **Check the lateral load on the rod end.**
<Graph of allowable lateral load on the rod end>

Confirm the allowable lateral load on the rod end of the actuator: EQY25, which has been selected temporarily while referencing the graph of allowable lateral load on the rod end.

Selection example)
Based on the graph shown on the right side,
- Attachment weight: 0.2 [kg] ≈ 2 [N]
- Product stroke: 200 [mm]

The lateral load on the rod end is in the allowable range.

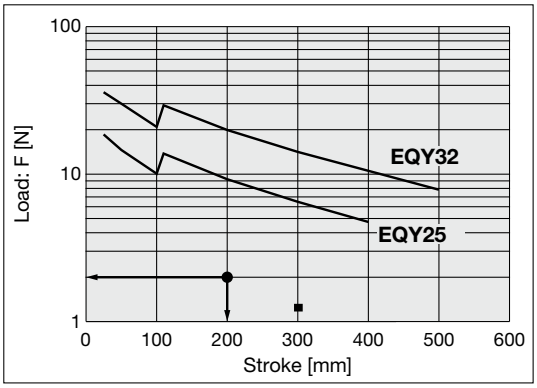

<Graph of allowable lateral load on the rod end>

Based on the above calculation result, the EQY25DHB-200 should be selected.

Speed–Work Load Graph (Guide)

∗ The following graphs show the values when the external guide is used together.

EQY16□HA

Horizontal/Lead 10

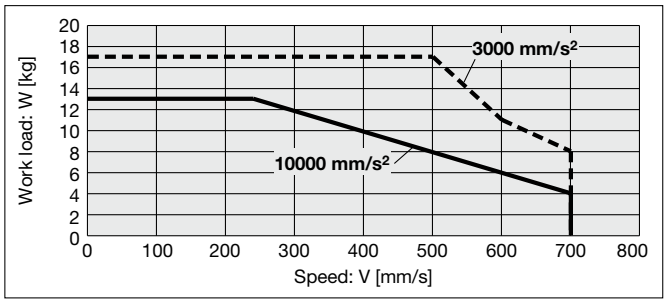

Vertical/Lead 10

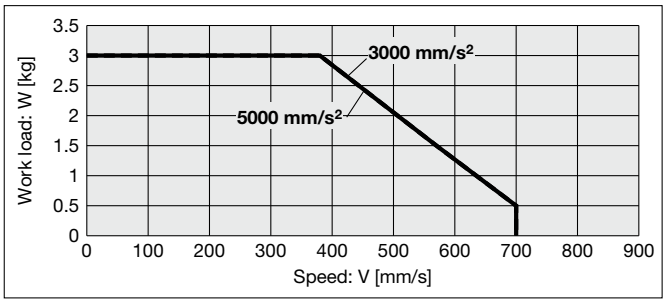

EQY16□HB

Horizontal/Lead 5

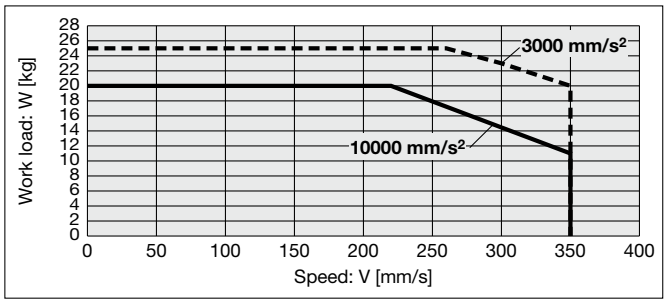

Vertical/Lead 5

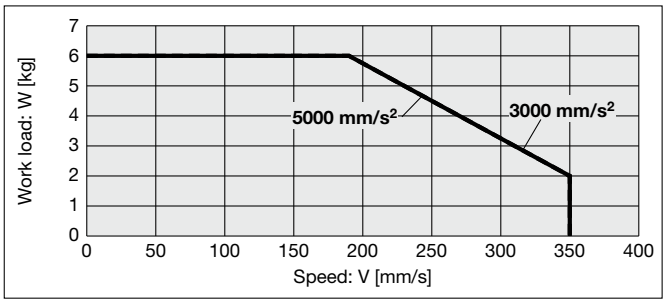

EQY16□HC

Horizontal/Lead 2.5

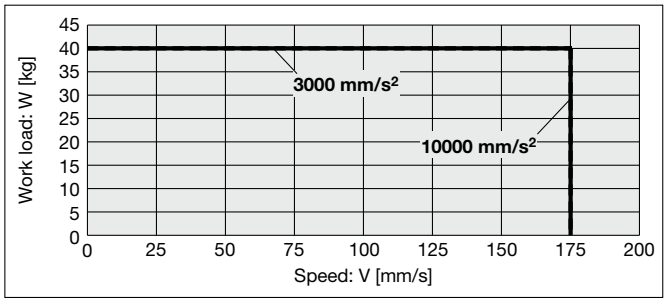

Vertical/Lead 2.5

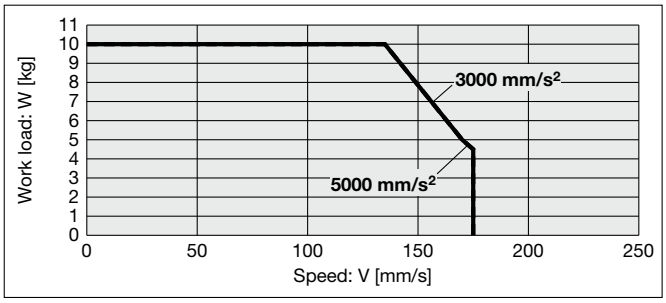

Speed–Work Load Graph (Guide)

∗ The following graphs show the values when the external guide is used together.

EQY25□HH

Horizontal/Lead 20

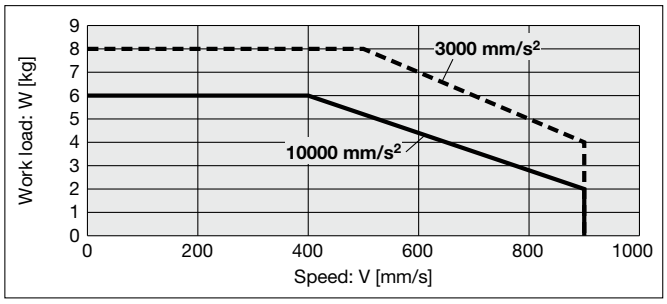

Vertical/Lead 20

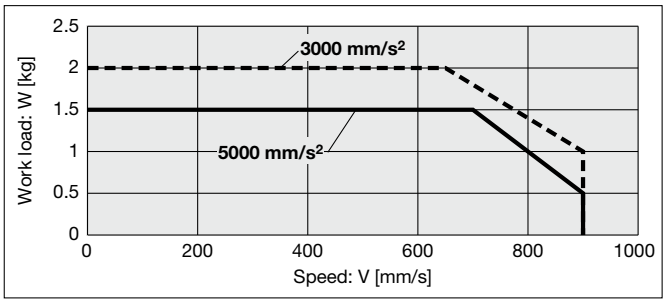

EQY25□HA

Horizontal/Lead 12

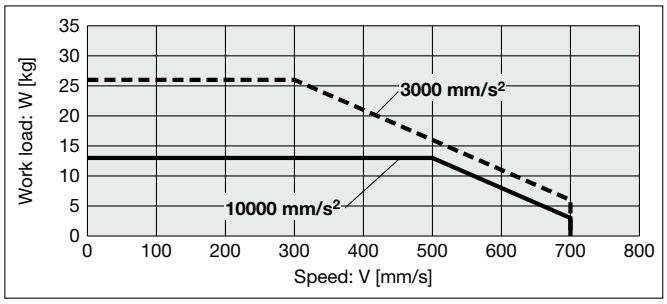

Vertical/Lead 12

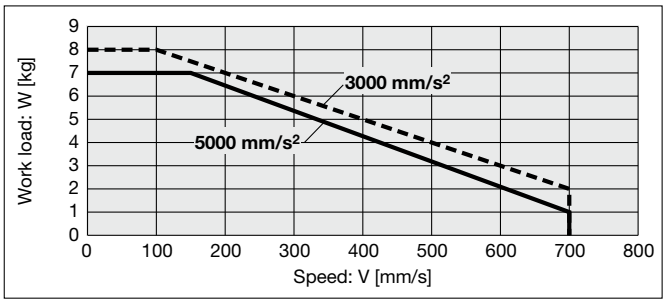

EQY25□HB

Horizontal/Lead 6

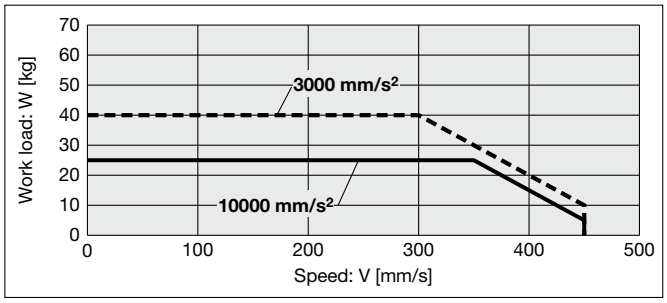

Vertical/Lead 6

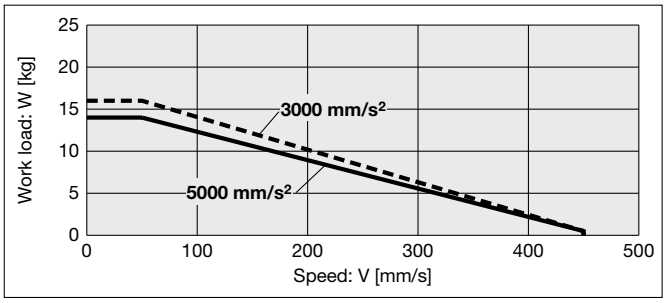

EQY25□HC

Horizontal/Lead 3

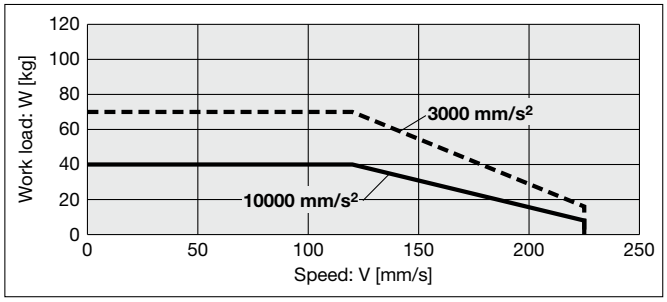

Vertical/Lead 3

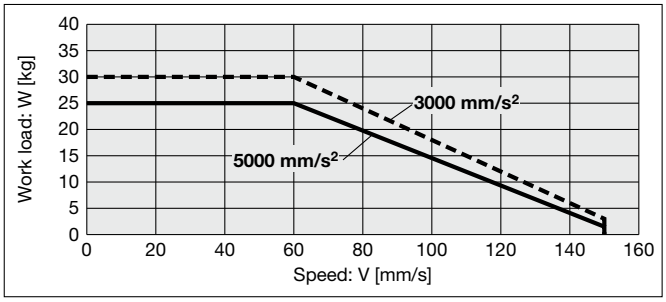

Speed–Work Load Graph (Guide)

∗ The following graphs show the values when the external guide is used together.

EQY32□HH

Horizontal/Lead 24

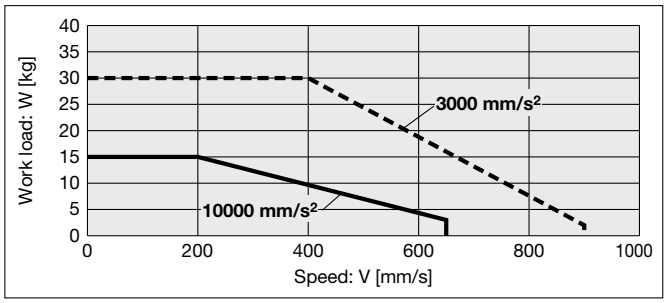

Vertical/Lead 24

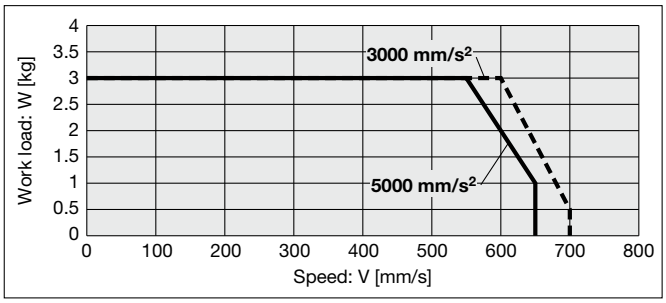

EQY32□HA

Horizontal/Lead 16

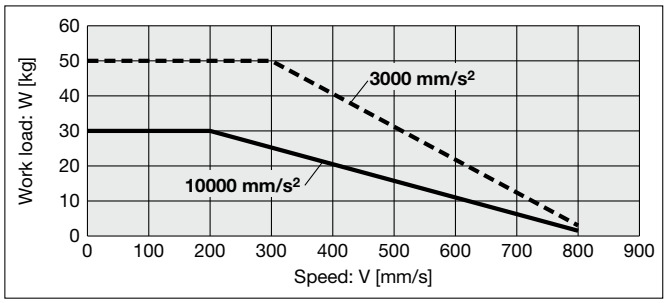

Vertical/Lead 16

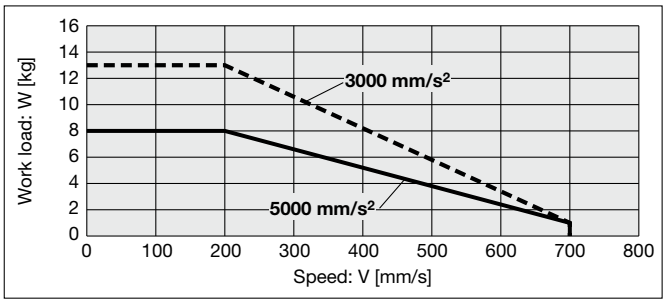

EQY32□HB

Horizontal/Lead 8

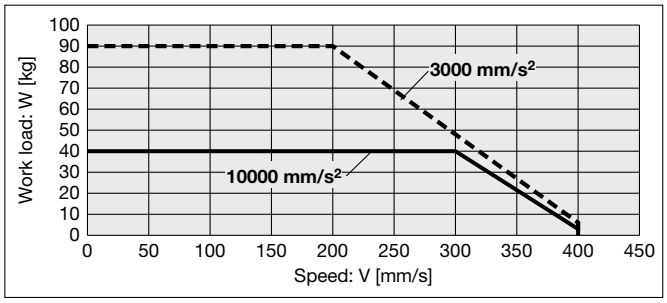

Vertical/Lead 8

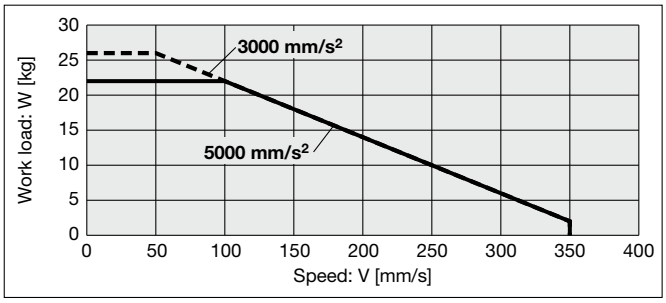

EQY32□HC

Horizontal/Lead 4

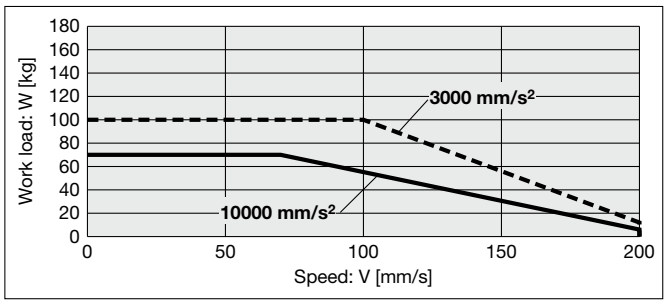

Vertical/Lead 4

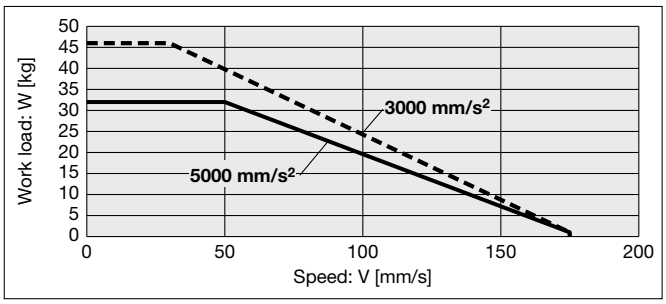

Graph of Allowable Lateral Load on the Rod End (Guide)

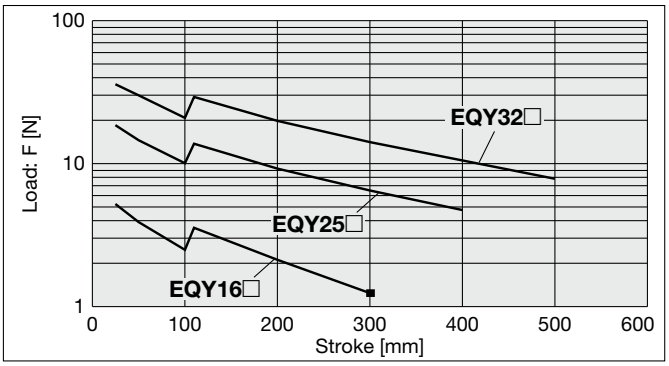

[Stroke] = [Product stroke] + [Distance from the rod end to the center of gravity of the workpiece]

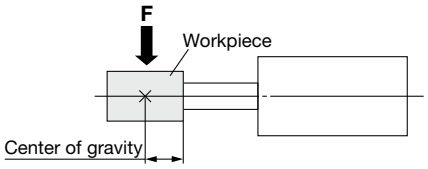

Rod Displacement: δ [mm]

Size \ Stroke	30	50	100	150	200	250	300	350	400	450	500
16	±0.4	±0.5	±0.9	±0.8	±1.1	±1.3	±1.5	—	—	—	—
25	±0.3	±0.4	±0.7	±0.7	±0.9	±1.1	±1.3	±1.5	±1.7	—	—
32	±0.3	±0.4	±0.7	±0.6	±0.8	±1.0	±1.1	±1.3	±1.5	±1.7	±1.8

∗ The values without a load are shown.

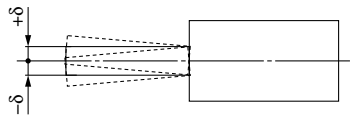

Non-rotating Accuracy of Rod

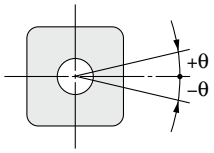

Size	Non-rotating accuracy θ
16	±1.1°
25	±0.8°
32	±0.7°

∗ Avoid using the electric actuator in such a way that rotational torque would be applied to the piston rod.
Failure to do so may result in the deformation of the non-rotating guide, abnormal auto switch responses, play in the internal guide, or an increase in the sliding resistance.

Force Conversion Graph (Guide)

EQY16□

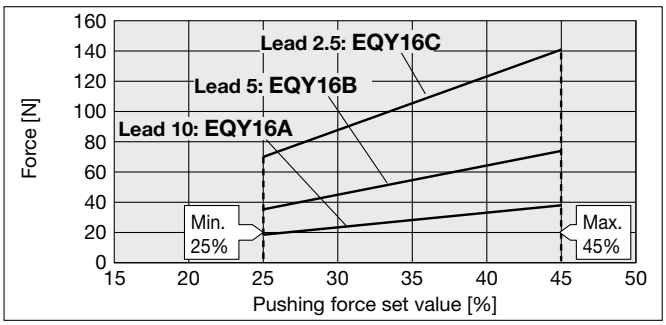

Ambient temperature	Pushing force set value [%]	Duty ratio [%]	Continuous pushing time [min]
40°C or less	45 or less	100	—

EQY32□

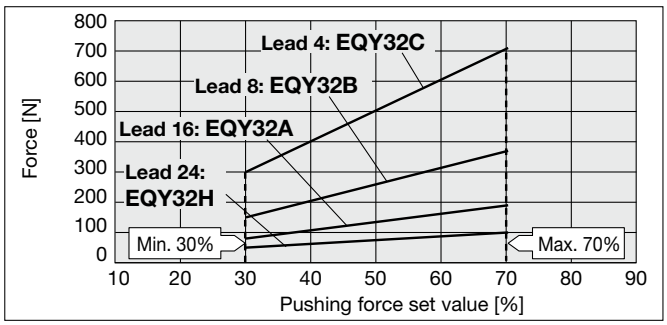

Ambient temperature	Pushing force set value [%]	Duty ratio [%]	Continuous pushing time [min]
40°C or less	70 or less	100	—

EQY25□

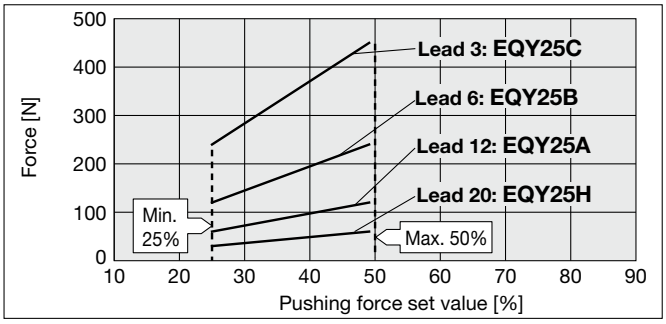

Ambient temperature	Pushing force set value [%]	Duty ratio [%]	Continuous pushing time [min]
40°C or less	50 or less	100	—

<Set Values for Vertical Upward Transfer Pushing Operations>

For vertical loads (upward), set the pushing force to the max. value shown below and operate at the work load or less.

Model	EQY16			EQY25				EQY32			
Lead	A	B	C	H	A	B	C	H	A	B	C
Work load [kg]	1	1.5	3	1	2.5	5	10	2	4.5	9	18
Pushing force	45%			50%				70%			

Battery-less Absolute (Step Motor 24 VDC)

e-Actuator Easy to Operate
Integrated Controller / Rod Type
EQY□H Series EQY16, 25, 32

CE UK CA

RoHS

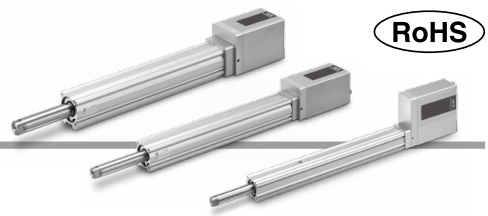

How to Order

EQY 25 D H B – 50 □ □ □ – B 5

❶ ❷ ❸ ❹ ❺ ❻ ❼ ❽ ❾ ❿

❶ Size

16
25
32

❷ Motor mounting position/Motor cover direction

Motor mounting position: In-line

Symbol	Motor cover direction*1	Size
D	—	25/32/40
D1	Left side	16
D2	Right side	
D3	Top side	
D4	Bottom side	

*1 This is the direction seen from the connector side.

Motor mounting position: Parallel

Symbol	Direction	Size
Nil	Top side	16/25/32/40
R	Right side	
L	Left side	

❸ Motor type

H	Battery-less absolute (Step motor 24 VDC)

❹ Lead [mm]

Symbol	EQY16	EQY25	EQY32
H	—	20	24
A	10	12	16
B	5	6	8
C	2.5	3	4

❺ Stroke [mm]

30	30
to	to
500	500

* For details, refer to the applicable stroke table below.

❻ Motor option

Nil	Without option
B	With lock

❼ Rod end thread

Nil	Rod end female thread
M	Rod end male thread (1 rod end nut is included.)

❾ Controller position

B	Integrated controller

❿ Parallel input

5	NPN
6	PNP

❽ Mounting*2

Symbol	Type	Motor mounting position					
		Parallel			In-line		
		16	25	32	16	25	32
Nil	Ends tapped*3 Body bottom tapped	●	●	●	●	●	●
L	Foot bracket	●	●	●	—	—	—
F	Rod flange*3 *6	●	●	●	●	●	●
G	Head flange*5	●	●	—	—	—	—
D	Double clevis*4	●	●	●	—	—	—

*1 Motor mounting position: For the parallel mounting type, the motor units with the following sizes and strokes protrude from the body end. Check for interference with workpieces before selecting a model.
- EQY16 Without lock: 30 mm stroke, With lock: 30, 50 mm strokes
- EQY25 Without lock: 30 mm stroke, With lock: 30, 50 mm strokes
- EQY32 Without lock: 30 mm stroke, With lock: 30, 50 mm strokes

*2 The mounting bracket is shipped together with the product but does not come assembled.

*3 For the horizontal cantilever mounting of the rod flange or ends tapped types, use the actuator within the following stroke range.
- EQY25: 200 or less - EQY32: 100 or less

*4 For the mounting of the double clevis type, use the actuator within the following stroke range.
- EQY16: 100 or less - EQY25: 200 or less - EQY32: 200 or less

*5 The head flange type is not available for the EQY32.

*6 The rod flange type cannot accommodate the following sizes and strokes.
- EQY16 Without lock: 30 mm stroke, With lock: 30, 50, 100 mm strokes
- EQY25 Without lock: 30 mm stroke, With lock: 30, 50 mm strokes
- EQY32 Without lock: 30 mm stroke, With lock: 30, 50 mm strokes

Applicable Stroke Table

Size	Stroke [mm]											
	30	50	100	150	200	250	300	350	400	450	500	Manufacturable stroke range
16	●	●	●	●	●	●	●	—	—	—	—	10 to 300
25	●	●	●	●	●	●	●	●	●	—	—	15 to 400
32	●	●	●	●	●	●	●	●	●	●	●	20 to 500

The auto switches should be ordered separately. For details, refer to pages 53 to 56.

Specifications

	Model			EQY16□H			EQY25□H				EQY32□H			
Actuator specifications	Stroke [mm]			30 to 300			30 to 400				30 to 500			
	Work load [kg]*1		Horizontal	17	25	40	8	26	40	70	30	50	90	100
			Vertical	3	6	10	2	8	16	30	3	13	26	46
	Pushing force [N]*2 *3 *4			19 to 38	36 to 74	69 to 141	36 to 76	63 to 122	126 to 238	232 to 452	50 to 118	80 to 189	156 to 370	296 to 707
	Speed [mm/s]	Stroke range	Up to 300	15 to 700	8 to 350	4 to 175	30 to 900	18 to 700	9 to 450	5 to 225	30 to 900	24 to 800	12 to 400	6 to 200
			350 to 400	—	—	—	30 to 900	18 to 600	9 to 300	5 to 150	30 to 900	24 to 640	12 to 320	6 to 160
			450 to 500	—	—	—	—	—	—	—	30 to 900	24 to 640	12 to 320	6 to 160
	Max. acceleration/deceleration [mm/s²]		Horizontal	10000*1										
			Vertical	5000*1										
	Pushing speed [mm/s²]*5			25			35				30			
	Positioning repeatability [mm]			±0.02										
	Lost motion [mm]*6			0.1 or less										
	Lead [mm]			10	5	2.5	20	12	6	3	24	16	8	4
	Impact/Vibration resistance [m/s²]*7			50/20										
	Actuation type			Ball screw + Belt (EQY□H), Ball screw (EQY□DH)										
	Guide type			Sliding bushing (Piston rod)										
	Operating temperature range [°C]			5 to 40										
	Operating humidity range [%RH]			90 or less (No condensation)										
Electric specifications	Motor size			□28			□42				□56.4			
	Motor type			Battery-less absolute (Step motor 24 VDC)										
	Encoder			Battery-less absolute										
	Power supply voltage [V]			24 VDC ±10%										
	Power [W]*8 *9			Max. power 82			Max. power 86				Max. power 109			
Lock unit specifications	Type*10			Non-magnetizing lock										
	Holding force [N]			29	59	118	47	78	157	294	75	108	216	421
	Power [W]*9			5			5				5			
	Power supply voltage [V]			24 VDC ±10%										

*1 Horizontal: Please use an external guide (friction coefficient: 0.1 or less). The work load shows the maximum value. The actual work load and transfer speed change according to the condition of the external guide.
For the speed, acceleration, and duty ratio according to the work load, check the "Speed–Work Load Graph" in the catalog.
Vertical: If the rod orientation is vertical or radial load is applied to the rod, please use an external guide (friction coefficient: 0.1 or less). The work load represents the maximum value. The actual work load and transfer speed change according to the condition of the external guide.
For the speed, acceleration, and duty ratio according to the work load, check the "Speed–Work Load Graph" in the catalog.
The values shown in ( ) are the max. acceleration/deceleration.
Set the acceleration/deceleration speed to 10000 [mm/s²] or less for the horizontal direction and 5000 [mm/s²] or less for the vertical direction.
*2 Pushing force accuracy is ±20% (F.S.).
*3 The pushing force set values for EQY16□H are 25% to 45%, for EQY25□H are 25% to 50%, and for EQY32□H are 30% to 70%.
The pushing force values change according to the duty ratio and pushing speed. Check the "Force Conversion Graph" in the catalog.
*4 The speed and force may change depending on the cable length, load, and mounting conditions. Furthermore, if the cable length exceeds 5 m, then it will decrease by up to 10% for each 5 m. (At 15 m: Reduced by up to 20%)
*5 The allowable speed for pushing operation. When push conveying a workpiece, operate at the vertical work load or less.
*6 A reference value for correcting errors in reciprocal operation
*7 Impact resistance: No malfunction occurred when the actuator was tested with a drop tester in both an axial direction and a perpendicular direction to the lead screw. (The test was performed with the actuator in the initial state.)
Vibration resistance: No malfunction occurred in a test ranging between 45 to 2000 Hz. The test was performed in both an axial direction and a perpendicular direction to the lead screw. (The test was performed with the actuator in the initial state.)
*8 Indicates the max. power during operation (including the controller). This value can be used for the selection of the power supply.
*9 For an actuator with lock, add the power for the lock.
*10 With lock only

Weight

Top/Right/Left Side Parallel Motor

Series	EQY16						
Stroke [mm]	30	50	100	150	200	250	300
Product weight [kg]	0.75	0.79	0.90	1.04	1.15	1.26	1.37

Series	EQY25									EQY32										
Stroke [mm]	30	50	100	150	200	250	300	350	400	30	50	100	150	200	250	300	350	400	450	500
Product weight [kg]	1.74	1.81	1.98	2.24	2.42	2.59	2.77	2.94	3.12	2.74	2.85	3.14	3.42	3.82	4.11	4.39	4.68	4.97	5.25	5.54

In-line Motor

Series	EQY16D						
Stroke [mm]	30	50	100	150	200	250	300
Product weight [kg]	0.72	0.76	0.87	1.01	1.12	1.23	1.34

Series	EQY25D									EQY32D										
Stroke [mm]	30	50	100	150	200	250	300	350	400	30	50	100	150	200	250	300	350	400	450	500
Product weight [kg]	1.60	1.67	1.84	2.10	2.28	2.45	2.63	2.80	2.98	2.55	2.66	2.95	3.23	3.63	3.92	4.20	4.49	4.78	5.06	5.35

Additional Weight

[kg]

Size		16	25	32
Lock/Motor cover		0.19	0.33	0.65
Rod end male thread	**Male thread**	0.01	0.03	0.03
	Nut	0.01	0.02	0.02
Foot bracket (2 sets including mounting bolt)		0.06	0.08	0.14
Rod flange (including mounting bolt)		0.13	0.17	0.20
Head flange (including mounting bolt)				
Double clevis (including pin, retaining ring, and mounting bolt)		0.08	0.16	0.22

Construction

Top/Right/Left side parallel motor

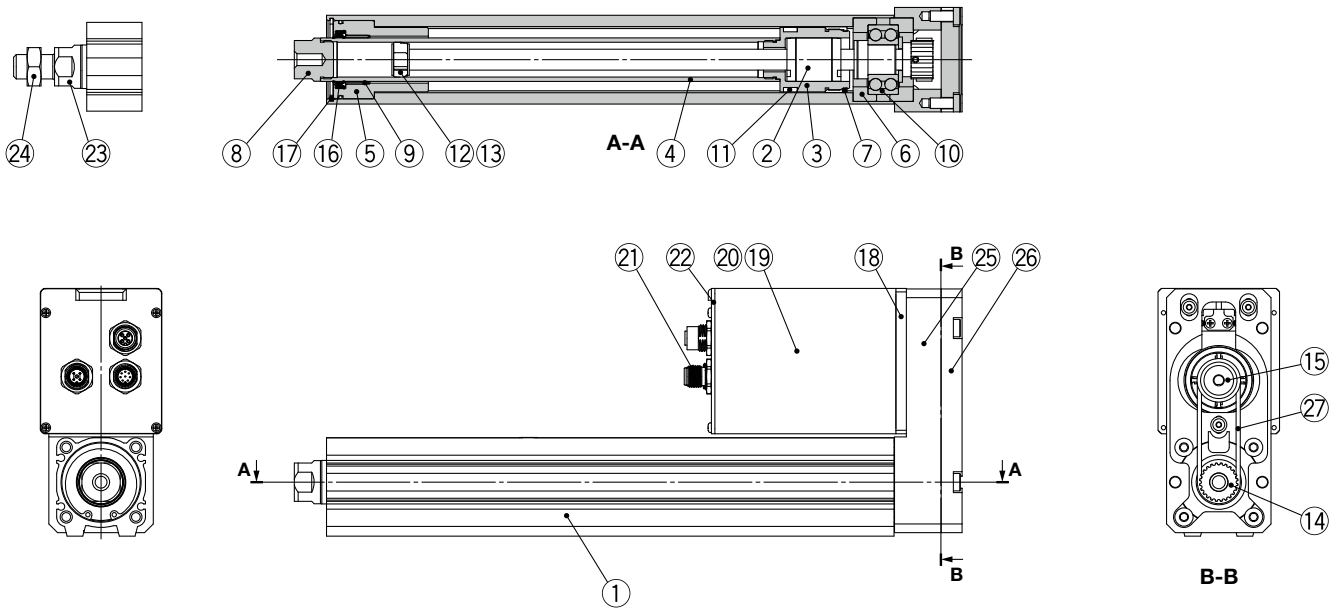

In-line motor

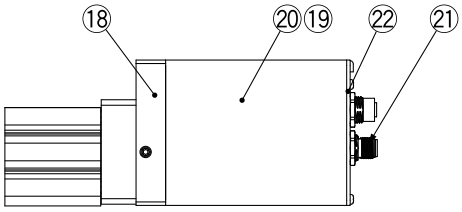

Component Parts

No.	Description	Material	Note
1	**Body**	Aluminum alloy	Anodized
2	**Ball screw assembly**	—	
3	**Piston**	Aluminum alloy	
4	**Piston rod**	Stainless steel	Hard chrome plating
5	**Rod cover**	Aluminum alloy	
6	**Bearing holder**	Aluminum alloy	
7	**Rotation stopper**	Synthetic resin	
8	**Socket (Female thread)**	Free cutting carbon steel	Nickel plating
9	**Bushing**	Bearing alloy	
10	**Bearing**	—	
11	**Magnet**	—	
12	**Wear ring holder**	Stainless steel	101 mm stroke or more
13	**Wear ring**	Synthetic resin	101 mm stroke or more
14	**Screw pulley/hub**	Aluminum alloy	
15	**Motor pulley/hub**	Aluminum alloy	
16	**Seal**	NBR	
17	**Retaining ring**	Steel for spring	
18	**Motor adapter**	Aluminum alloy	Anodized
19	**Motor**	—	
20	**Motor cover**	Aluminum alloy	Anodized
21	**Connector**	—	
22	**End cover**	Aluminum alloy	Anodized
23	**Socket (Male thread)**	Free cutting carbon steel	Nickel plating/ Rod end male thread
24	**Hexagon nut**	—	Rod end male thread

Component Parts (Top/Right/Left side parallel only)

No.	Description	Material	Note
25	**Return box**	Aluminum die-casted	Coating
26	**Return plate**	Aluminum die-casted	Coating
27	**Belt**	—	

Replacement Parts (Top/Right/Left side parallel only)/Belt

No.	Size	Order no.
27	**16**	LE-D-2-7
	25	LE-D-19-3
	32	LE-D-19-4

Replacement Parts/Grease Pack

Applied portion	Order no.
Piston rod	GR-S-010 (10 G) GR-S-020 (20 G)

Dimensions: Top Side Parallel Motor

EQY16H

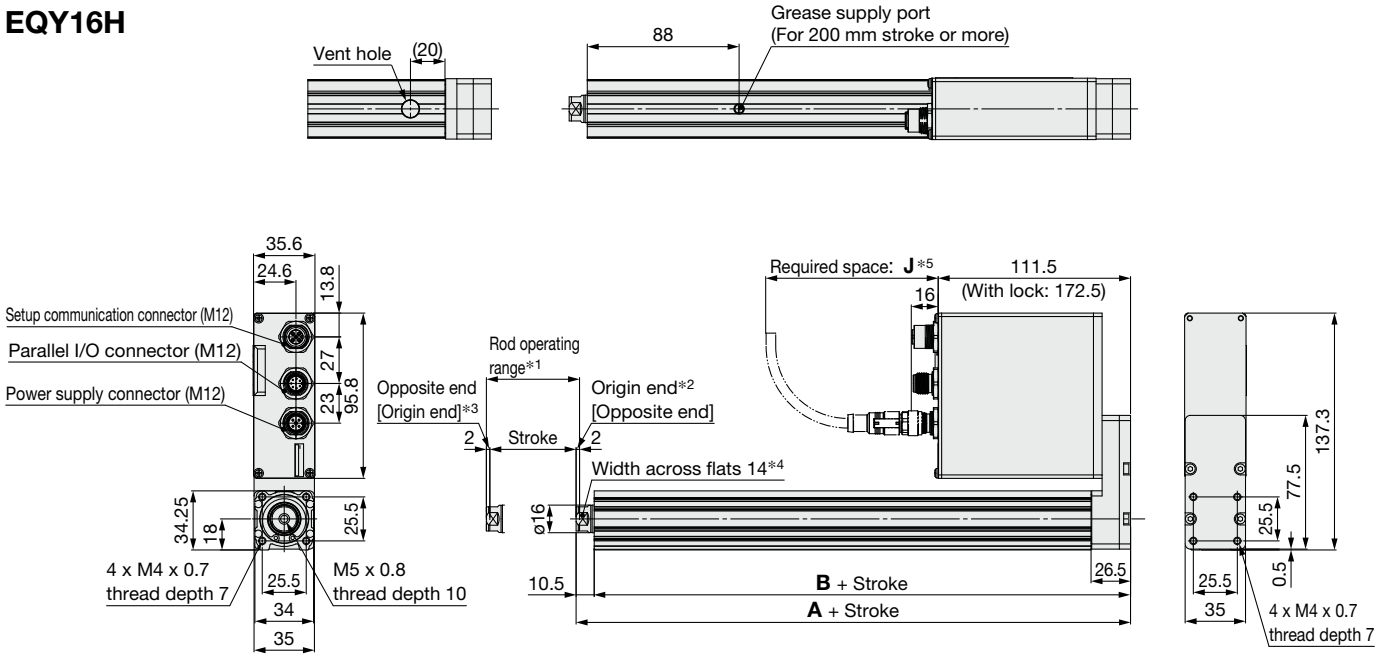

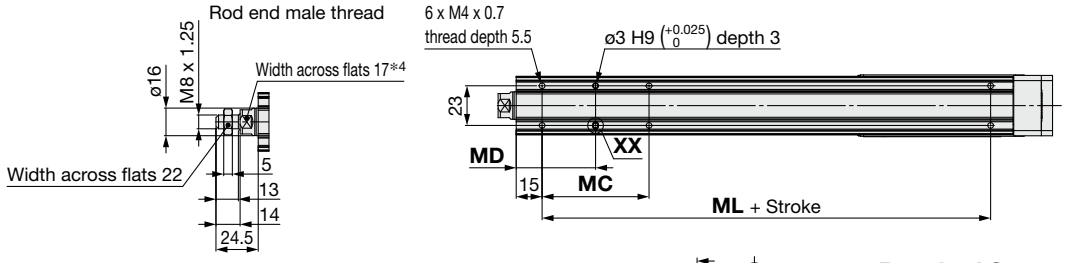

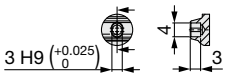

XX (2:1)

Required Space*5 [mm]

Cable connector type	J
Straight	115

*1 The range of movement of the rod according to the movement instructions. Make sure that workpieces mounted on the rod do not interfere with other workpieces or the facilities around the rod.
*2 Indicates the factory default origin position (0 mm)
*3 [ ] refers to when the rotation direction reference is changed.
*4 The direction of the rod end width across flats is different for each single unit, so it is not always the same as the direction in the drawing.
*5 The amount of space required to connect the various cables and mount the product
Provide this amount of space for cable handling.

Dimensions [mm]

Stroke [mm]	A	B	MC	MD	ML
30	105	94.5	17	23.5	40
50, 100			32	31	
150, 200, 250, 300	125	114.5	62	46	60

Dimensions: Top Side Parallel Motor

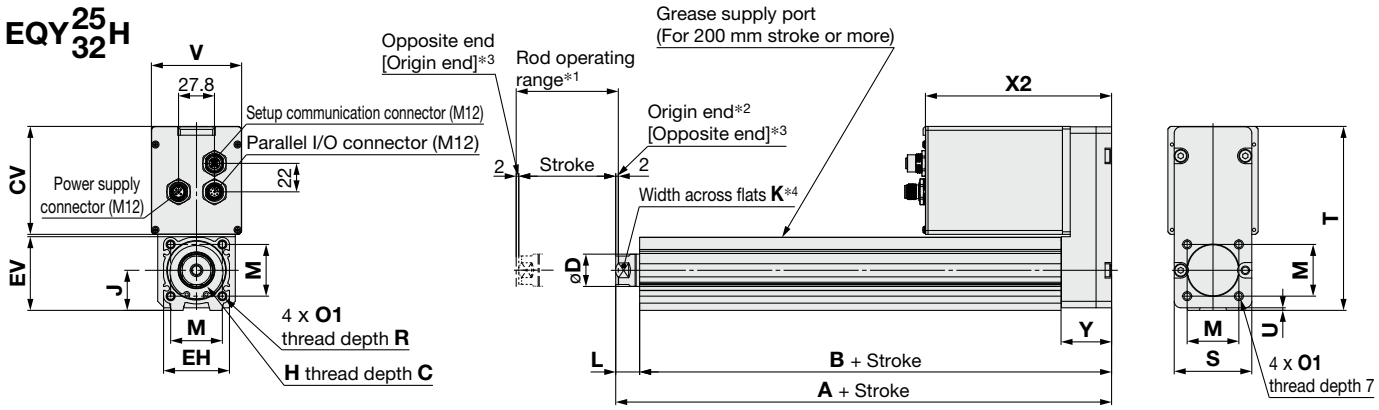

Motor option: With lock

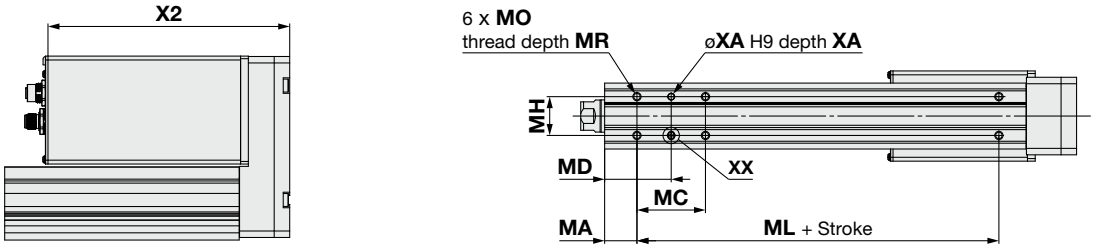

Motor mounting position

Left side parallel

Right side parallel

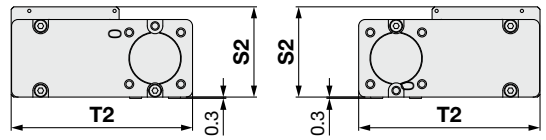

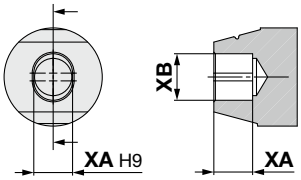

XX (2:1)

*1 The range of movement of the rod according to the movement instructions. Make sure that workpieces mounted on the rod do not interfere with other workpieces or the facilities around the rod.
*2 Indicates the factory default origin position (0 mm)
*3 [ ] refers to when the rotation direction reference is changed.
*4 The direction of rod end width across flats differs depending on the products.

Dimensions

[mm]

Size	Stroke range [mm]	A	B	C	D	EH	EV	H	J	K	L	M	O1	R	S	S2	T	T2	U	CV	V	X2 Without lock	X2 With lock	Y
25	15 to 100	136.2	121.7	13	20	44	45.5	M8 x 1.25	24	17	14.5	34	M5 x 0.8	8	46	58.1	115	113.6	1	66.3	57.8	144	184	32.2
	101 to 400	161.2	146.7																					
32	20 to 100	153.6	135.1	13	25	51	56.5	M8 x 1.25	31	22	18.5	40	M6 x 1	10	60	70.8	142	140.3	2	83.5	69.8	144	189	39.1
	101 to 500	183.6	165.1																					

Body Bottom Tapped

[mm]

Size	Stroke range [mm]	MA	MC	MD	MH	ML	MO	MR	XA	XB
25	15 to 39	20	24	32	29	50	M5 x 0.8	6.5	4	5
	40 to 100		42	41						
	101 to 124					75				
	125 to 200		59	49.5						
	201 to 400		76	58						
32	20 to 39	25	22	36	30	50	M6 x 1	8.5	5	6
	40 to 100		36	43						
	101 to 124					80				
	125 to 200		53	51.5						
	201 to 500		70	60						

Dimensions: In-line Motor

EQY16DH

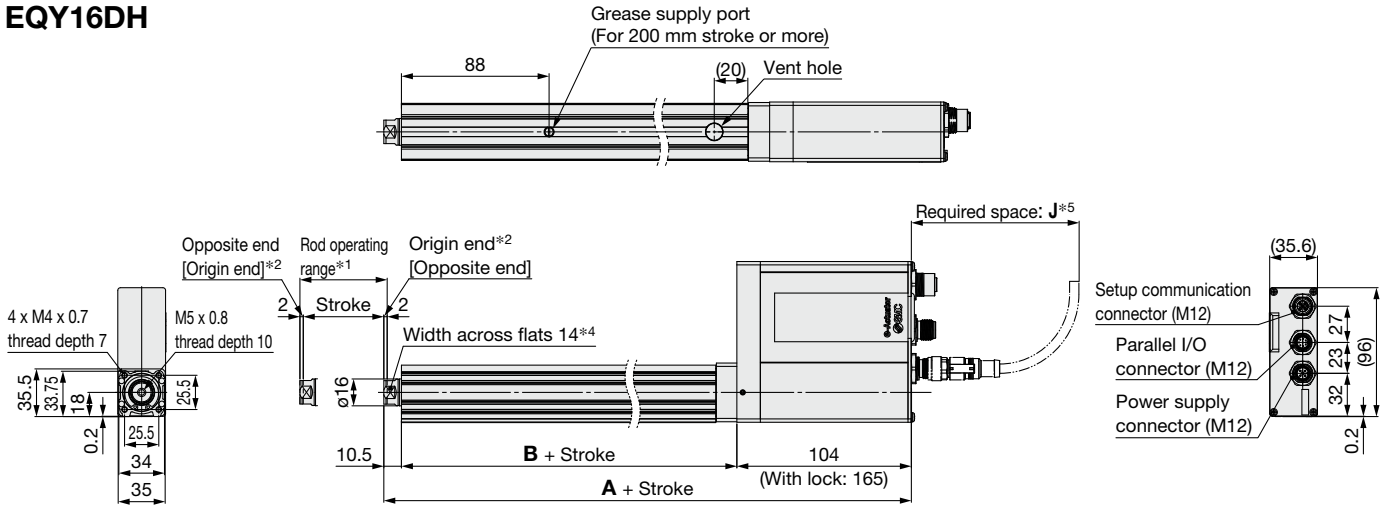

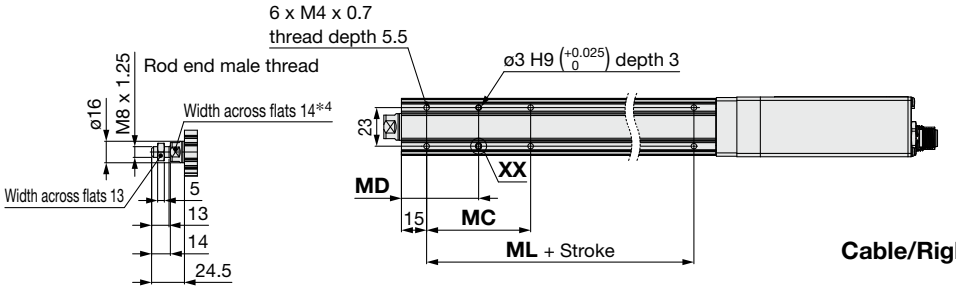

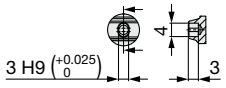

XX (2:1)

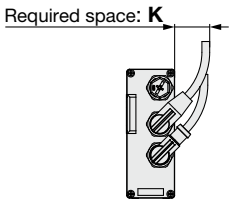

Cable/Right angled connector mounting view*5

Required Space*5 [mm]

Cable connector type	J
Straight	115

*1 The range of movement of the rod according to the movement instructions. Make sure that workpieces mounted on the rod do not interfere with other workpieces or the facilities around the rod.
*2 Indicates the factory default origin position (0 mm)
*3 [ ] refers to when the rotation direction reference is changed.
*4 The direction of the rod end width across flats is different for each single unit, so it is not always the same as the direction in the drawing.
*5 The amount of space required to connect the various cables and mount the product
Provide this amount of space for cable handling.

Dimensions [mm]

Stroke [mm]	A		B	MC	MD	ML
	Without lock	With lock				
30	190	251	76.5	17	23.5	40
50, 100				32	31	
150, 200, 250, 300	215	276	100.6	62	46	60

Dimensions: In-line Motor

EQY25/32DH

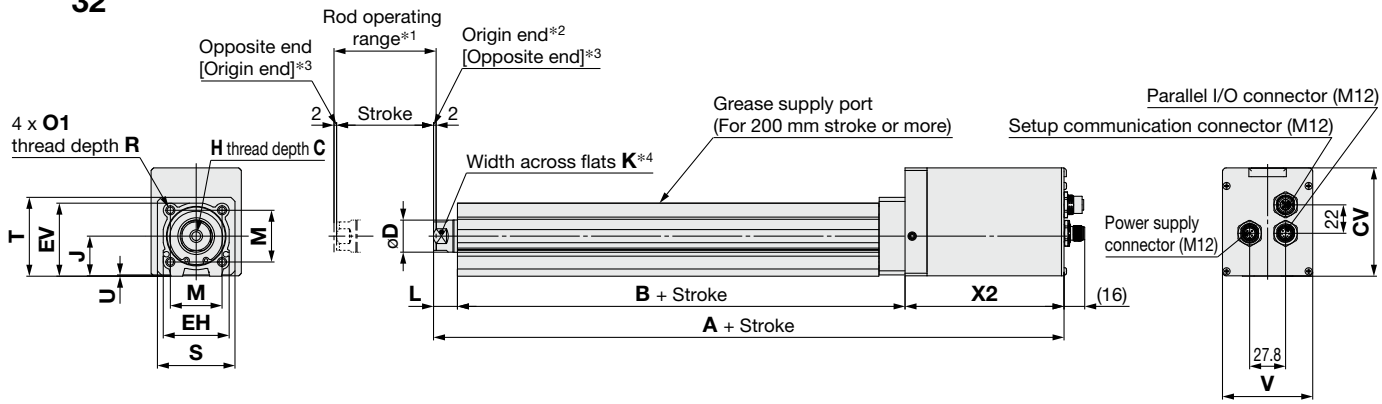

Motor option: With lock

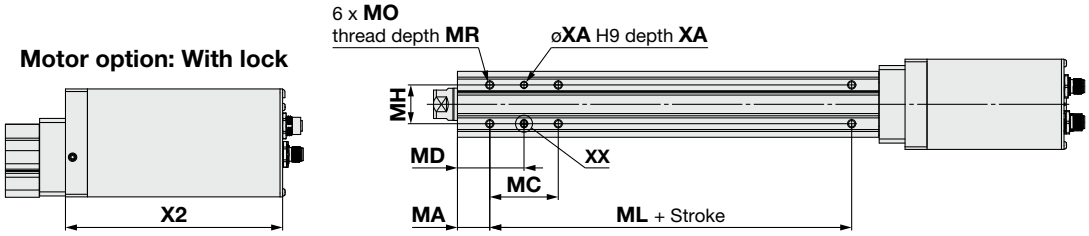

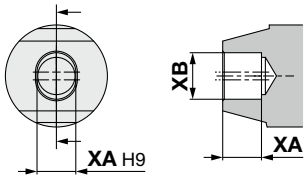

XX (2:1)

*1 The range of movement of the rod according to the movement instructions. Make sure that workpieces mounted on the rod do not interfere with other workpieces or the facilities around the rod.
*2 Indicates the factory default origin position (0 mm)
*3 [ ] refers to when the rotation direction reference is changed.
*4 The direction of rod end width across flats differs depending on the products.

Dimensions

[mm]

Size	Stroke range [mm]	A		B	C	D	EH	EV	H	J	K	L	M	O1	R	S	T	U	V	X2		CV
		Without lock	With lock																	Without lock	With lock	
25	15 to 100	243.4	283.4	102.9	13	20	44	45.5	M8 x 1.25	24	17	14.5	34	M5 x 0.8	8	45	46.5	1.5	57.8	126	166	66.6
	101 to 400	268.4	308.4	127.9																		
32	20 to 100	257.8	302.8	116.3	13	25	51	56.5	M8 x 1.25	31	22	18.5	40	M6 x 1	10	60	61	1	69.8	123	168	83.8
	101 to 500	287.8	332.8	146.3																		

Body Bottom Tapped

[mm]

Size	Stroke range [mm]	MA	MC	MD	MH	ML	MO	MR	XA	XB
25	15 to 39	20	24	32	29	50	M5 x 0.8	6.5	4	5
	40 to 100		42	41						
	101 to 124					75				
	125 to 200		59	49.5						
	201 to 400		76	58						
32	20 to 39	25	22	36	30	50	M6 x 1	8.5	5	6
	40 to 100		36	43						
	101 to 124					80				
	125 to 200		53	51.5						
	201 to 500		70	60						

Dimensions

End male thread: EQY16/25/32□H A/B/C-□□M

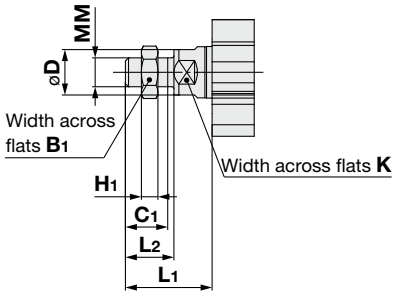

End Male Thread

[mm]

Size	B_1	C_1	øD	H_1	K	L_1	L_2	MM
16	13	12	16	5	14	24.5	14	M8 x 1.25
25	22	20.5	20	8	17	38	23.5	M14 x 1.5
32	22	20.5	25	8	22	42	23.5	M14 x 1.5

∗ The L_1 measurement is when the unit is in the original position. At this position, 2 mm at the end.

∗ Refer to the **Web Catalog** for details on the rod end nut and mounting bracket.
∗ Refer to the specific product precautions ("Handling") in the **Web Catalog** when mounting end brackets such as knuckle joint or workpieces.

Foot bracket: EQY16/25/32H A/B/C-□□□L

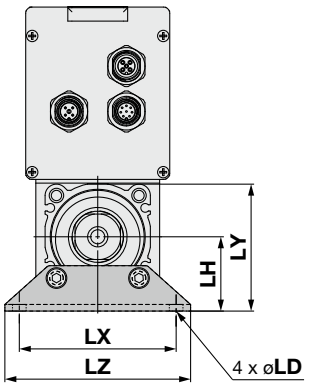

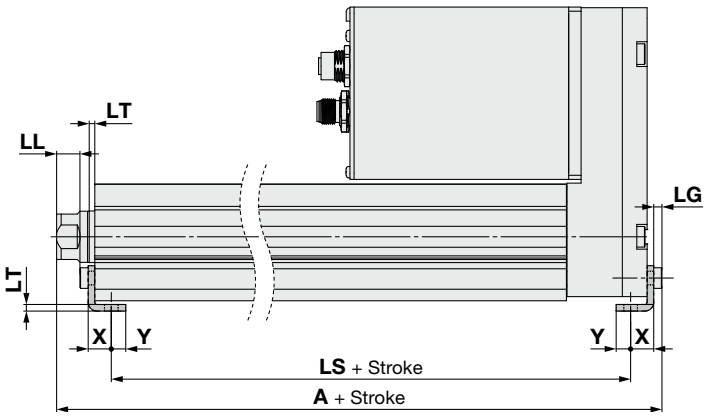

Outward mounting

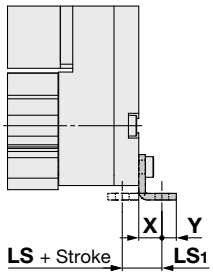

Included parts
· Foot bracket
· Body mounting bolt

Foot Bracket

[mm]

Size	Stroke range [mm]	A	LS	LS_1	LL	LD	LG	LH	LT	LX	LY	LZ	X	Y
16	30 to 100	106.5	77.1	16.1	5.4	6.6	2.8	24	2.3	48	40.3	62	9.2	5.8
	101 to 300	126.5	97.1											
25	30 to 100	142.3	104.5	19.8	8.4	6.6	3.5	30	2.6	57	51.5	71	11.2	5.8
	101 to 400	167.3	129.5											
32	30 to 100	160.8	119.1	19.2	11.3	6.6	4	36	3.2	76	61.5	90	11.2	7
	101 to 500	190.8	149.1											

Material: Carbon steel (Chromating)
∗ The A measurement is when the unit is in the original position. At this position, 2 mm at the end.
∗ When the motor mounting is the right or left side parallel type, the head side foot bracket should be mounted outward.

Dimensions

Rod flange: EQY 16/25/32 □H A/B/C -□□□F

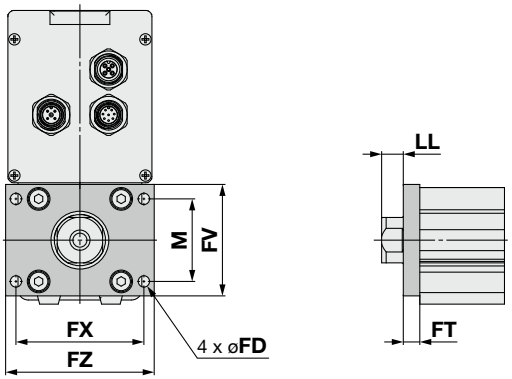

Head flange: EQY 16/25 H A/B/C -□□□G

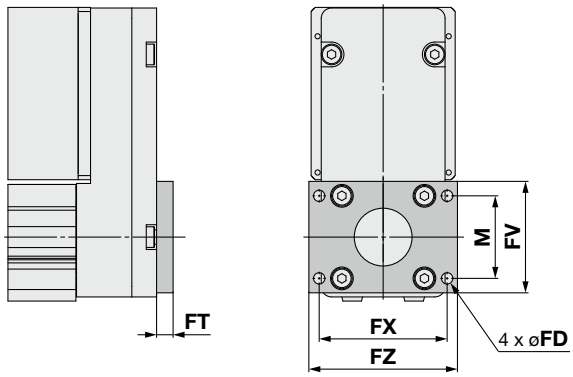

∗ The head flange type is not available for the EQY32.

Included parts
· Flange
· Body mounting bolt

Rod/Head Flange [mm]

Size	FD	FT	FV	FX	FZ	LL	M
16	6.6	8	39	48	60	2.5	—
25	5.5	8	48	56	65	6.5	34
32	5.5	8	54	62	72	10.5	40

Material: Carbon steel (Nickel plating)

Double clevis: EQY 16/25/32 H A/B/C -□□□D

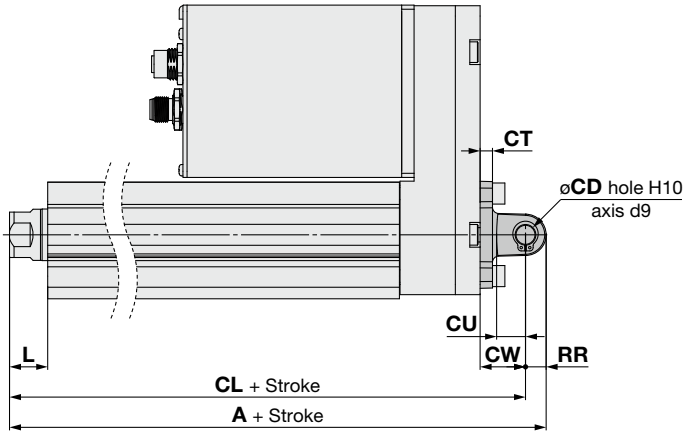

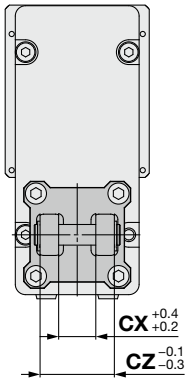

Included parts
· Double clevis
· Body mounting bolt
· Clevis pin
· Retaining ring

For the models and dimensions of the mounting bracket and simple joint bracket, refer to the **Web Catalog** for the LEY series.

∗ Refer to the **Web Catalog** for details on the rod end nut and mounting bracket.

Double Clevis [mm]

Size	Stroke range [mm]	A	CL	CB	CD	CT	CU	CW	CX	CZ	L	RR
16	30 to 100	128.4	119.4	20	8	5	12	18	8	16	10.5	9
25	30 to 100	166.2	156.2	—	10	5	14	20	18	36	14.5	10
	101 to 200	191.2	181.2									
32	30 to 100	185.6	175.6	—	10	6	14	22	18	36	18.5	10
	101 to 200	215.6	205.6									

Material: Cast iron (Coating)
∗ The A and CL measurements are when the unit is in the original position. At this position, 2 mm at the end.

Auto Switch Mounting

Auto Switch Proper Mounting Position

Applicable auto switch: D-M9□(V), D-M9□E(V), D-M9□W(V), D-M9□A(V)

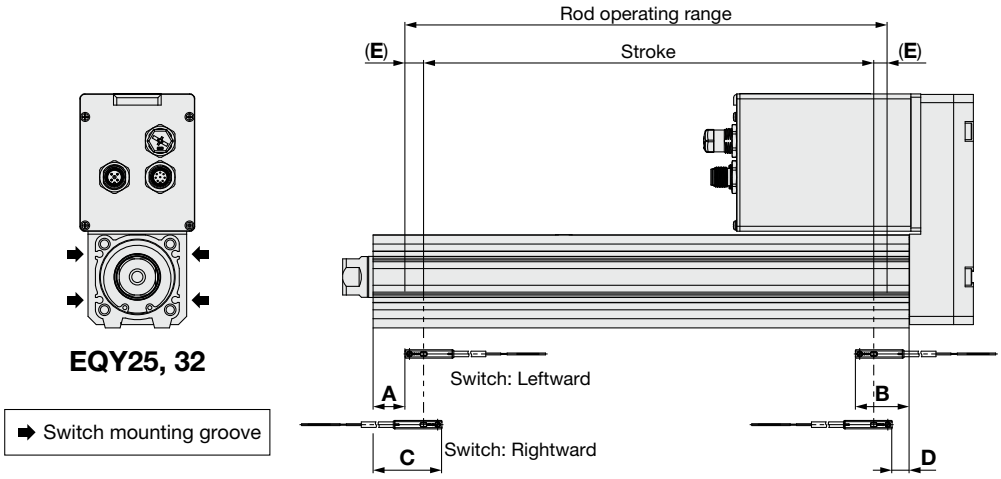

[mm]

Size	Stroke range	Auto switch position				Return to origin distance	Operating range
		Leftward mounting		Rightward mounting			
		A	B	C	D	E	—
16	30 to 100	21.5	46.5	33.5	34.5	(2)	2.9
	105 to 300	41.5		53.5			
25	30 to 100	27	62.5	39	50.5	(2)	4.2
	105 to 400	52		64			
32	30 to 100	30.5	65.5	42.5	53.5	(2)	4.9
	105 to 500	60.5		72.5			

∗ The values in the table above are to be used as a reference when mounting auto switches for stroke end detection. Adjust the auto switch after confirming the operating conditions in the actual setting.
∗ An auto switch cannot be mounted on the same side as a motor.
∗ Since the operating range is provided as a guideline including hysteresis, it cannot be guaranteed (assuming approx. ±30% dispersion). It may change substantially depending on the ambient environment.

Auto Switch Mounting

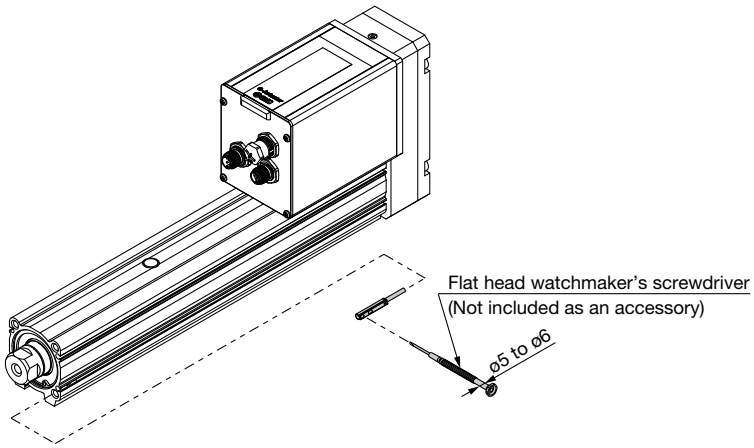

Tightening Torque for Auto Switch Mounting Screw

[N·m]

Auto switch model	Tightening torque
D-M9□(V) **D-M9□E(V)** **D-M9□W(V)**	0.05 to 0.15
D-M9□A(V)	0.05 to 0.10

∗ When tightening the auto switch mounting screw (included with the auto switch), use a watchmaker's screwdriver with a handle diameter of 5 to 6 mm.

Solid State Auto Switch Direct Mounting Type
D-M9N(V)/D-M9P(V)/D-M9B(V)

Refer to the SMC website for details on products that are compliant with international standards.

Grommet

- **2-wire load current is reduced (2.5 to 40 mA).**
- **Using flexible cable as standard spec.**

⚠Caution

Precautions

Fix the auto switch with the existing screw installed on the auto switch body. The auto switch may be damaged if a screw other than the one supplied is used.

Auto Switch Specifications

PLC: Programmable Logic Controller

D-M9□, D-M9□V (With indicator light)						
Auto switch model	D-M9N	D-M9NV	D-M9P	D-M9PV	D-M9B	D-M9BV
Electrical entry direction	In-line	Perpendicular	In-line	Perpendicular	In-line	Perpendicular
Wiring type	3-wire				2-wire	
Output type	NPN		PNP		—	
Applicable load	IC circuit, Relay, PLC				24 VDC relay, PLC	
Power supply voltage	5, 12, 24 VDC (4.5 to 28 V)				—	
Current consumption	10 mA or less				—	
Load voltage	28 VDC or less		—		24 VDC (10 to 28 VDC)	
Load current	40 mA or less				2.5 to 40 mA	
Internal voltage drop	0.8 V or less at 10 mA (2 V or less at 40 mA)				4 V or less	
Leakage current	100 μA or less at 24 VDC				0.8 mA or less	
Indicator light	Red LED illuminates when turned ON.					
Standard	CE/UKCA marking					

Oilproof Flexible Heavy-duty Lead Wire Specifications

Auto switch model		D-M9N(V)	D-M9P(V)	D-M9B(V)
Sheath	Outside diameter [mm]	ø2.6		
Insulator	Number of cores	3 cores (Brown/Blue/Black)		2 cores (Brown/Blue)
	Outside diameter [mm]	ø0.88		
Conductor	Effective area [mm²]	0.15		
	Strand diameter [mm]	ø0.05		
Min. bending radius [mm] (Reference values)		17		

∗ Refer to the **Web Catalog** for solid state auto switch common specifications.
∗ Refer to the **Web Catalog** for lead wire lengths.

Weight

[g]

Auto switch model		D-M9N(V)	D-M9P(V)	D-M9B(V)
Lead wire length	0.5 m (**Nil**)	8		7
	1 m (**M**)	14		13
	3 m (**L**)	41		38
	5 m (**Z**)	68		63

Dimensions

[mm]

D-M9□

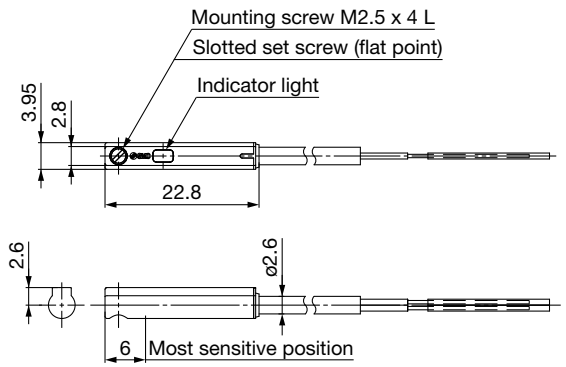

D-M9□V

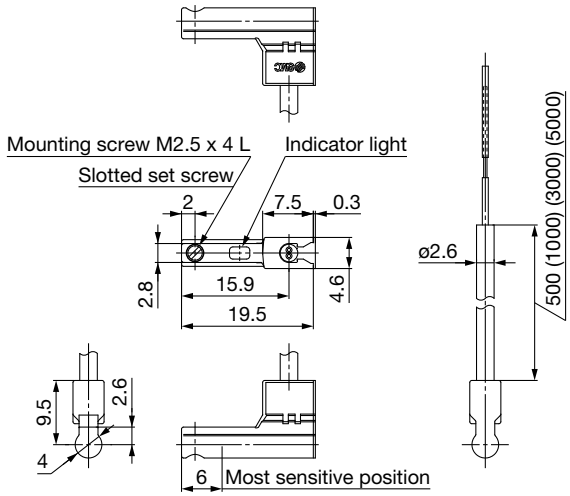

Normally Closed Solid State Auto Switch Direct Mounting Type
D-M9NE(V)/D-M9PE(V)/D-M9BE(V)

Refer to the SMC website for details on products that are compliant with international standards.

Grommet

- **Output signal turns on when no magnetic force is detected.**
- **Can be used for the actuator adopted by the solid state auto switch D-M9 series (excluding special order products)**

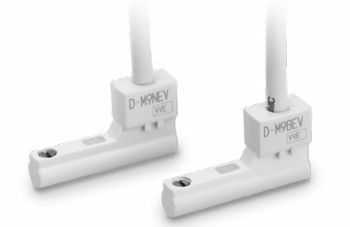

⚠Caution

Precautions

Fix the auto switch with the existing screw installed on the auto switch body. The auto switch may be damaged if a screw other than the one supplied is used.

Auto Switch Specifications

PLC: Programmable Logic Controller

D-M9□E, D-M9□EV (With indicator light)						
Auto switch model	D-M9NE	D-M9NEV	D-M9PE	D-M9PEV	D-M9BE	D-M9BEV
Electrical entry direction	In-line	Perpendicular	In-line	Perpendicular	In-line	Perpendicular
Wiring type	3-wire				2-wire	
Output type	NPN		PNP		—	
Applicable load	IC circuit, Relay, PLC				24 VDC relay, PLC	
Power supply voltage	5, 12, 24 VDC (4.5 to 28 V)				—	
Current consumption	10 mA or less				—	
Load voltage	28 VDC or less		—		24 VDC (10 to 28 VDC)	
Load current	40 mA or less				2.5 to 40 mA	
Internal voltage drop	0.8 V or less at 10 mA (2 V or less at 40 mA)				4 V or less	
Leakage current	100 μA or less at 24 VDC				0.8 mA or less	
Indicator light	Red LED illuminates when turned ON.					
Standard	CE/UKCA marking					

Oilproof Flexible Heavy-duty Lead Wire Specifications

Auto switch model		D-M9NE(V)	D-M9PE(V)	D-M9BE(V)
Sheath	Outside diameter [mm]	ø2.6		
Insulator	Number of cores	3 cores (Brown/Blue/Black)		2 cores (Brown/Blue)
	Outside diameter [mm]	ø0.88		
Conductor	Effective area [mm²]	0.15		
	Strand diameter [mm]	ø0.05		
Min. bending radius [mm] (Reference values)		17		

∗ Refer to the **Web Catalog** for solid state auto switch common specifications.
∗ Refer to the **Web Catalog** for lead wire lengths.

Weight

[g]

Auto switch model		D-M9NE(V)	D-M9PE(V)	D-M9BE(V)
Lead wire length	0.5 m (**Nil**)	8		7
	1 m (**M**)∗1	14		13
	3 m (**L**)	41		38
	5 m (**Z**)∗1	68		63

∗1 The 1 m and 5 m options are produced upon receipt of order.

Dimensions

[mm]

D-M9□E

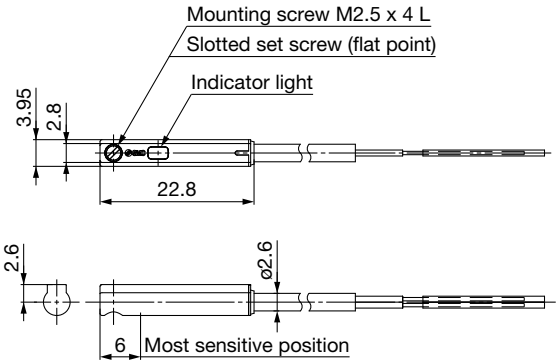

D-M9□EV

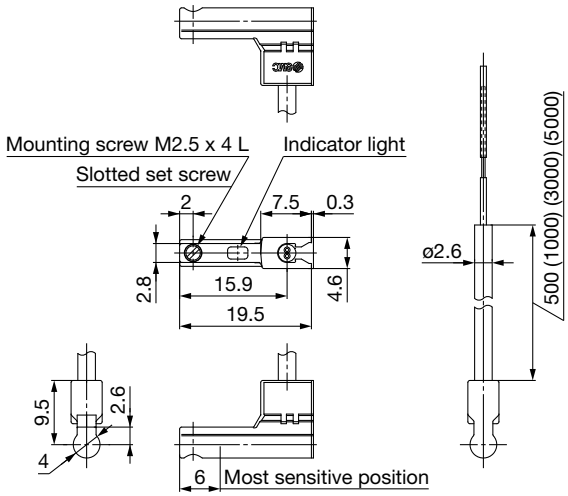

2-Color Indicator Solid State Auto Switch Direct Mounting Type
D-M9NW(V)/D-M9PW(V)/D-M9BW(V)

Refer to the SMC website for details on products that are compliant with international standards.

Grommet

- **2-wire load current is reduced (2.5 to 40 mA).**
- **Using flexible cable as standard spec.**
- **The proper operating range can be determined by the color of the light. (Red → Green ← Red)**

⚠Caution

Precautions

Fix the auto switch with the existing screw installed on the auto switch body. The auto switch may be damaged if a screw other than the one supplied is used.

Auto Switch Specifications

PLC: Programmable Logic Controller

D-M9□W, D-M9□WV (With indicator light)						
Auto switch model	D-M9NW	D-M9NWV	D-M9PW	D-M9PWV	D-M9BW	D-M9BWV
Electrical entry direction	In-line	Perpendicular	In-line	Perpendicular	In-line	Perpendicular
Wiring type	3-wire				2-wire	
Output type	NPN		PNP		—	
Applicable load	IC circuit, Relay, PLC				24 VDC relay, PLC	
Power supply voltage	5, 12, 24 VDC (4.5 to 28 V)				—	
Current consumption	10 mA or less				—	
Load voltage	28 VDC or less		—		24 VDC (10 to 28 VDC)	
Load current	40 mA or less				2.5 to 40 mA	
Internal voltage drop	0.8 V or less at 10 mA (2 V or less at 40 mA)				4 V or less	
Leakage current	100 μA or less at 24 VDC				0.8 mA or less	
Indicator light	Operating range ····· Red LED illuminates. Proper operating range ····· Green LED illuminates.					
Standard	CE/UKCA marking					

Oilproof Flexible Heavy-duty Lead Wire Specifications

Auto switch model		D-M9NW(V)	D-M9PW(V)	D-M9BW(V)
Sheath	Outside diameter [mm]	ø2.6		
Insulator	Number of cores	3 cores (Brown/Blue/Black)		2 cores (Brown/Blue)
	Outside diameter [mm]	ø0.88		
Conductor	Effective area [mm²]	0.15		
	Strand diameter [mm]	ø0.05		
Min. bending radius [mm] (Reference values)		17		

∗ Refer to the **Web Catalog** for solid state auto switch common specifications.
∗ Refer to the **Web Catalog** for lead wire lengths.

Weight

[g]

Auto switch model		D-M9NW(V)	D-M9PW(V)	D-M9BW(V)
Lead wire length	0.5 m (**Nil**)	8		7
	1 m (**M**)	14		13
	3 m (**L**)	41		38
	5 m (**Z**)	68		63

Dimensions

[mm]

D-M9□W

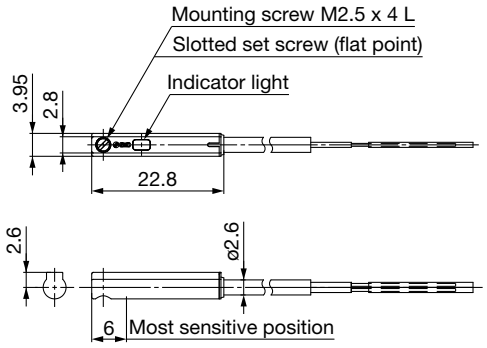

D-M9□WV

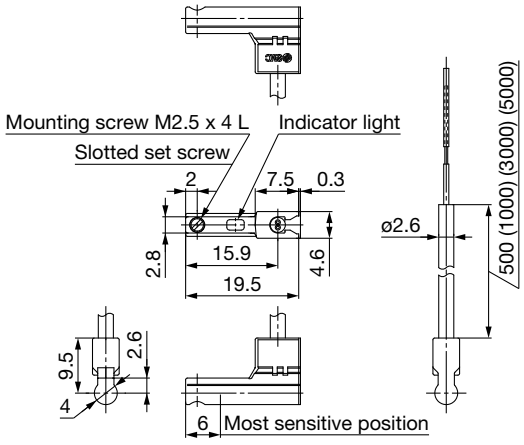

Rod Type/*EQY□H Series*
Integrated Controller Electric Actuator Specific Product Precautions 1

Be sure to read this before handling the products. Refer to the back cover for safety instructions. For electric actuator and auto switch precautions, refer to the "Handling Precautions for SMC Products" and the "Operation Manual" on the SMC website: https://www.smcworld.com

Design / Selection

⚠Warning

1. Do not apply a load in excess of the specification limits.

Select a suitable actuator by work load and allowable lateral load on the rod end. If a load in excess of the specification limits is applied to the piston rod, the generation of play in the piston rod sliding parts, reduced accuracy, etc., may occur and adversely affect the operation and service life of the product.

2. Do not use the product in applications where excessive external force or impact force is applied to it.

Failure to do so may result in a malfunction.

Handling

⚠Caution

1. OUT signal

1) Positioning operation
When the product comes within the set range of the parameter [OUT signal output width], the OUT signal will turn ON.
Initial value: Set to [0.50] or higher.

2) Pushing operation
When the effective force reaches the set [Pushing force], the OUT0 and OUT1 outputs corresponding to the commanded operation data turn ON to complete the pushing operation.

<Set Values for Vertical Upward Transfer Pushing Operations>

For vertical loads (upward), set the pushing force to the max. value shown below and operate at the work load or less.

Model	EQY16			EQY25				EQY32			
Lead	A	B	C	H	A	B	C	H	A	B	C
Work load [kg]	1	1.5	3	1	2.5	5	10	2	4.5	9	18
Pushing force	45%			50%				70%			

Handling

⚠Caution

2. To conduct a pushing operation, be sure to set the product to [Pushing operation].

Also, refrain from bumping the workpiece during a positioning operation or when in the range of the positioning operation. Failure to do so may result in a malfunction.

3. The driving speed at the time of pushing operation is fixed.

4. The actual speed of this actuator is affected by the load.

Check the model selection section of the catalog.

5. Do not apply a load, impact, or resistance in addition to the transferred load during return to origin.

Additional force will cause the displacement of the origin position since it is based on the detected motor torque.

6. Do not scratch or dent the sliding parts of the piston rod by bumping them or placing objects on them.

The piston rod and guide rod are manufactured to precise tolerances, so even a slight deformation may result in a malfunction.

7. When an external guide is used, connect it in such a way that no impact or load is applied to it.

Use a freely moving connector (such as a floating joint).

8. Do not operate by fixing the piston rod and moving the actuator body.

Excessive load will be applied to the piston rod, resulting in damage to the actuator and a reduced service life of the product.

9. When an actuator is operated with one end fixed and the other free (ends tapped or flange), a bending moment may act on the actuator due to vibration generated at the stroke end, which can damage the actuator. In such cases, install a mounting bracket to suppress the vibration of the actuator body or reduce the speed so that the actuator does not vibrate at the stroke end.

Also, use a mounting bracket when moving the actuator body or when a long stroke actuator is mounted horizontally and fixed at one end.

Integrated Controller Electric Actuator Specific Product Precautions 2

Be sure to read this before handling the products. Refer to the back cover for safety instructions. For electric actuator and auto switch precautions, refer to the "Handling Precautions for SMC Products" and the "Operation Manual" on the SMC website: https://www.smcworld.com

Handling

⚠Caution

10. Avoid using the electric actuator in such a way that rotational torque would be applied to the piston rod.

Failure to do so may result in the deformation of the non-rotating guide, abnormal auto switch responses, play in the internal guide, or an increase in the sliding resistance.

Refer to the table below for the approximate values of the allowable range of rotational torque.

Allowable rotational torque [N·m] or less	EQY16	EQY25	EQY32
	0.8	1.1	1.4

When screwing a bracket or nut into the piston rod end, hold the flats of the end of the "socket" with a wrench (the piston rod should be fully retracted). Do not apply tightening torque to the non-rotating mechanism.

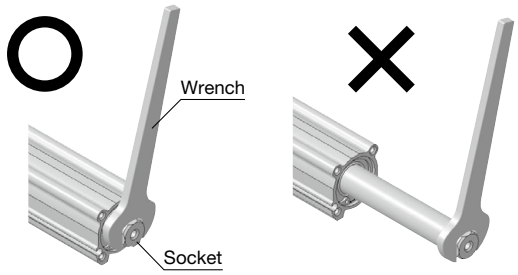

11. When mounting a bolt, workpiece, or attachment, hold the flats of the piston rod end with a wrench so that the piston rod does not rotate. The bolt should be tightened within the specified torque range.

Failure to do so may result in abnormal auto switch responses, play in the internal guide, or an increase in the sliding resistance.

e-Actuator Electric Specifications

Compatible motor		Step motor 24 VDC
Power supply		24 VDC ±10%
Compatible encoder		Battery-less absolute
Parallel input specifications	**Number of inputs**	3 inputs (Non-insulated)
	Input voltage	24 VDC ±10%
	Input current	5 mA/circuit
Parallel output specifications	**Number of outputs**	4 outputs (Non-insulated)
	Load voltage	24 VDC ±10%
	Max. load current	40 mA/point
LED		PWR (Green), ALM (Red), OVL (Orange)

The initial setting of the e-Actuator at the time of shipment from the factory is the closed center mode.
To switch the setting to single or double solenoid mode, switch the mode by using the e-Actuator setup software.

Wiring Examples

∗ The wiring examples are shown below. Refer to the EQFS/EQY operation manual for details.
∗ Use the I/O cable (JX-CI□-E-□-S) for connecting a PLC with the parallel I/O connector.
∗ Wiring depends on the parallel input/output type (NPN or PNP).
∗ The parallel I/O is of non-insulated specification.
The ground connection of the connected PLC and other equipment uses a common GND with the GND of the power supply connector.

Wiring diagram (NPN)

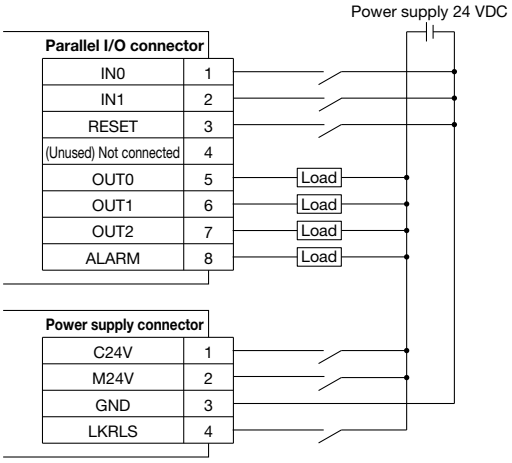

Wiring diagram (PNP)

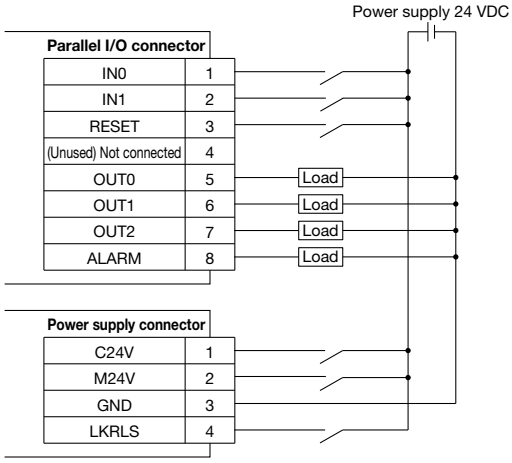

Input Signal

Name	Details
IN0∗1	Movement signal for origin end
IN1∗1	Movement signal for opposite end
RESET	Reset alarms

∗1 In single solenoid mode, turning ON of IN1 input gives an opposite end operation instruction, turning OFF of IN1 input gives an origin end operation instruction, and IN0 is not used.

Output Signal

Name	Details
OUT0	Origin end position detection
OUT1	Opposite end position detection
OUT2	Midpoint position detection
*ALARM∗1	OFF when alarm is generated

∗1 Signal of negative-logic circuit
∗ Check the catalog and operation manual of each actuator model which is capable of performing pushing operations.
The “Specifications” table for models which are capable of performing pushing operations includes an item for the pushing force.

Operation Data Setting

∗ For details of the setting of operation data, refer to the e-Actuator Setup Software Operation Manual.

Operation data setting for positioning

In this setting, the actuator moves toward and stops at the target position.
The following diagram shows the setting items and operation.
The setting items and set values for this operation are stated below.

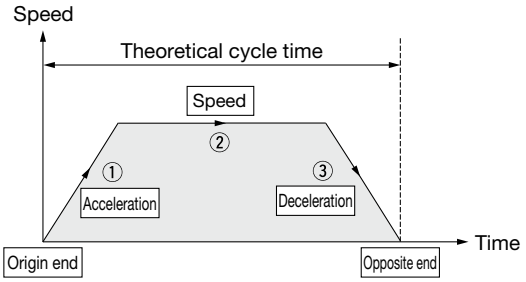

∗ The items circled in □ are setting items.

Operation data setting for pushing

The actuator moves toward the target position, and when it reaches that position, it starts pushing with the set force or less.
The following diagram shows the setting items and operation.
The setting items and set values for this operation are stated below.

∗ Check the catalog and operation manual of each actuator model which is capable of performing pushing operations.
The "Specifications" table for models which are capable of performing pushing operations includes an item for the pushing force.

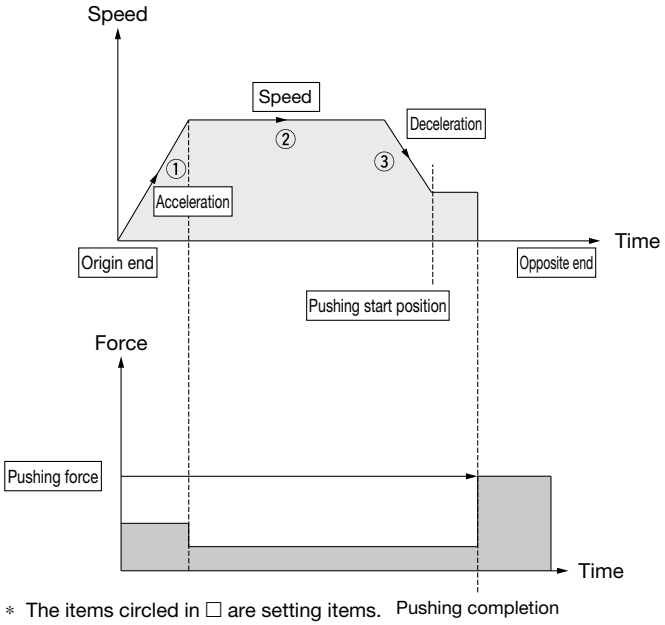

∗ The items circled in □ are setting items.

◎ Explanation of modes
· Double solenoid mode: it is possible to make operation commands to the origin end and opposite end by means of two input signals as though a double solenoid valve is used.
· Single solenoid mode: it is possible to make operation commands to the origin end and opposite end by means of a single input signal as though a single solenoid valve is used.
· Closed center mode: it is possible to make operation commands to the origin end, opposite end, and intermediate point by means of two input signals as though a closed center valve is used.

Operation Data (Positioning)

Item	Details
Speed	Transfer speed to the target position
Acceleration	Item which defines how rapidly the actuator reaches the speed set. The higher the set value, the faster it reaches the speed set.
Deceleration	Item which defines how rapidly the actuator comes to stop. The higher the set value, the quicker it stops.
Origin end	Target position of the origin end of the actuator
Opposite end	Target position of the opposite end of the actuator

Operation Data (Pushing)

Item	Details
Speed	Transfer speed to the target position
Acceleration	Item which defines how rapidly the actuator reaches the speed set. The higher the set value, the faster it reaches the speed set.
Deceleration	Item which defines how rapidly the actuator comes to stop. The higher the set value, the quicker it stops.
Pushing force	Pushing force ratio is defined. The setting range differs depending on the electric actuator type. Refer to the operation manual for the electric actuator.
Origin end	Target position of the origin end of the actuator
Opposite end	Target position of the opposite end of the actuator
Pushing start position	Specifies the position at which the pushing operation starts

∗ Check the catalog and operation manual of each actuator model which is capable of performing pushing operations.
The "Specifications" table for models which are capable of performing pushing operations includes an item for the pushing force.

Options

■Communication cable for controller setting

Controller setting kit JX-CT-E
A set which includes a communication cable (JX-CTC-E) and a USB cable (LEC-W2-U)
∗ It is possible to individually purchase the communication cable and USB cable.

Communication cable JX-CTC-E

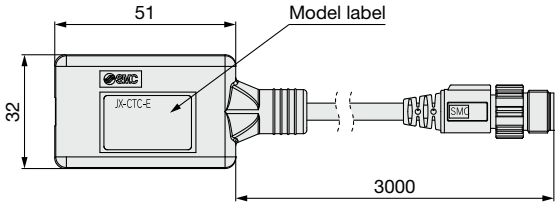

USB cable LEC-W2-U

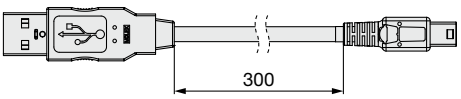

<Controller setting software/USB driver>
· Controller setting software
· USB driver (For JXC-CT□-E)
Download from SMC's website:
https://www.smcworld.com

Hardware Requirements

OS	Windows®10 (64 bit), Windows®11 (64 bit)
Communication interface	USB 2.0 port
Display	1366 x 768 or more

∗ Windows®10 and Windows®11 are registered trademarks of Microsoft Corporation in the United States.

■Power supply cable

JX – CD S – E – 1 – S

Connector type

Symbol	Specifications
S	Straight
A	Right angled

Cable length

1	1.5 m
3	3 m
5	5 m
10	10 m

● Connector type: Straight

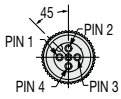

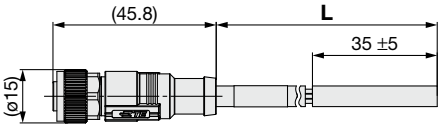

A end B end

Pin no.	Wire color	Signal
1	Brown	C24V
2	White	M24V
3	Blue	0V
4	Black	LK RLS

Part no.	Weight [g]
JX-CDS-E-1-S	68
JX-CDS-E-3-S	125
JX-CDS-E-5-S	200
JX-CDS-E-10-S	387
JX-CDA-E-1-S	68
JX-CDA-E-3-S	125
JX-CDA-E-5-S	200
JX-CDA-E-10-S	387

● Connector type: Right angled

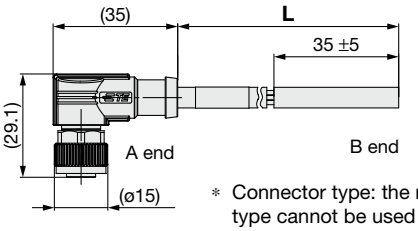

A end B end

∗ Connector type: the right angled type cannot be used for the parallel mounting type.

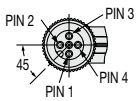

■Parallel I/O cable

JX – CI S – E – 1 – S

Connector type

Symbol	Specifications
S	Straight
A	Right angled

Cable length

1	1.5 m
3	3 m
5	5 m
10	10 m

● Connector type: Straight

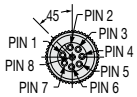

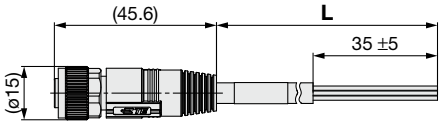

A end B end

● Connector type: Right angled

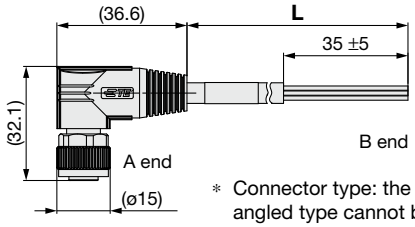

A end B end

∗ Connector type: the right angled type cannot be used for the parallel mounting type.

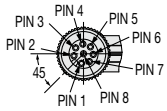

Pin no.	Wire color	Signal
1	White	IN0
2	Brown	IN1
3	Green	RESET
4	Yellow	—
5	Gray	OUT0
6	Pink	OUT1
7	Blue	OUT2
8	Red	ALARM

Part no.	Weight [g]
JX-CIS-E-1-S	88
JX-CIS-E-3-S	164
JX-CIS-E-5-S	265
JX-CIS-E-10-S	517
JX-CIA-E-1-S	88
JX-CIA-E-3-S	164
JX-CIA-E-5-S	265
JX-CIA-E-10-S	517

Slider Type Rod Type

EQFS□H/EQY□H Series
Battery-less Absolute Encoder Type Specific Product Precautions

Be sure to read this before handling the products. Refer to the back cover for safety instructions. For electric actuator precautions, refer to the "Handling Precautions for SMC Products" and the "Operation Manual" on the SMC website: https://www.smcworld.com

Handling

⚠ Caution

1. In environments where strong magnetic fields are present, use may be limited.

A magnetic sensor is used in the encoder. Therefore, if the actuator motor is used in an environment where strong magnetic fields are present, malfunction or failure may occur.
Do not expose the actuator motor to magnetic fields with a magnetic flux density of 13 mT or more.
When installing an electric actuator and an air cylinder with an auto switch (ex. CDQ2 series) or multiple electric actuators side by side, maintain a space of 40 mm or more around the motor. Refer to the construction drawing of the actuator motor.

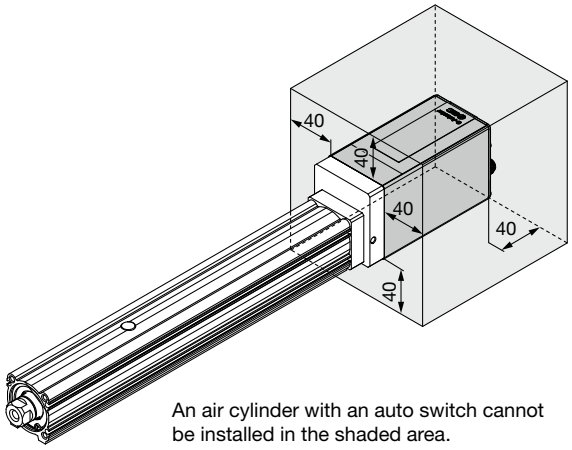

An air cylinder with an auto switch cannot be installed in the shaded area.

• When lining up actuators

For actuators with a built-in auto switch magnet, maintain a space of 40 mm or more between the motors and the position where the magnet passes.

✕ Do not allow the motors to be in close proximity to the position where the magnet passes.

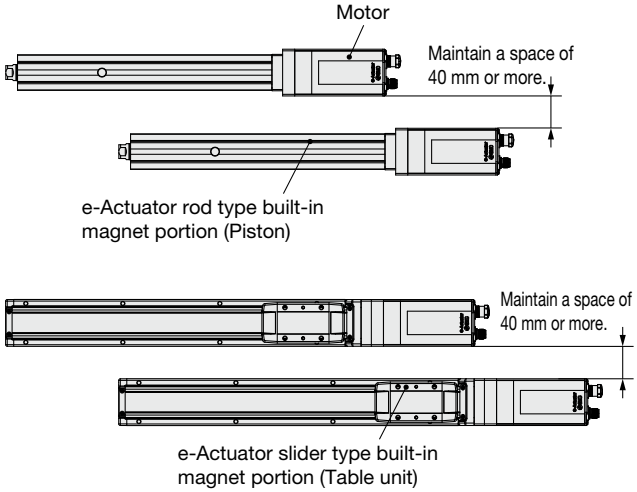

⚠ Safety Instructions

These safety instructions are intended to prevent hazardous situations and/or equipment damage. These instructions indicate the level of potential hazard with the labels of **"Caution," "Warning"** or **"Danger."** They are all important notes for safety and must be followed in addition to International Standards (ISO/IEC)*1), and other safety regulations.

⚠ Danger : **Danger** indicates a hazard with a high level of risk which, if not avoided, will result in death or serious injury.

⚠ Warning: **Warning** indicates a hazard with a medium level of risk which, if not avoided, could result in death or serious injury.

⚠ Caution: **Caution** indicates a hazard with a low level of risk which, if not avoided, could result in minor or moderate injury.

*1) ISO 4414: Pneumatic fluid power - General rules and safety requirements for systems and their components
ISO 4413: Hydraulic fluid power - General rules and safety requirements for systems and their components
IEC 60204-1: Safety of machinery - Electrical equipment of machines - Part 1: General requirements
ISO 10218-1: Robots and robotic devices - Safety requirements for industrial robots - Part 1:Robots
etc.

⚠ Warning

1. **The compatibility of the product is the responsibility of the person who designs the equipment or decides its specifications.**
   Since the product specified here is used under various operating conditions, its compatibility with specific equipment must be decided by the person who designs the equipment or decides its specifications based on necessary analysis and test results. The expected performance and safety assurance of the equipment will be the responsibility of the person who has determined its compatibility with the product. This person should also continuously review all specifications of the product referring to its latest catalog information, with a view to giving due consideration to any possibility of equipment failure when configuring the equipment.
2. **Only personnel with appropriate training should operate machinery and equipment.**
   The product specified here may become unsafe if handled incorrectly. The assembly, operation and maintenance of machines or equipment including our products must be performed by an operator who is appropriately trained and experienced.
3. **Do not service or attempt to remove product and machinery/equipment until safety is confirmed.**
   1. The inspection and maintenance of machinery/equipment should only be performed after measures to prevent falling or runaway of the driven objects have been confirmed.
   2. When the product is to be removed, confirm that the safety measures as mentioned above are implemented and the power from any appropriate source is cut, and read and understand the specific product precautions of all relevant products carefully.
   3. Before machinery/equipment is restarted, take measures to prevent unexpected operation and malfunction.
4. **Our products cannot be used beyond their specifications. Our products are not developed, designed, and manufactured to be used under the following conditions or environments. Use under such conditions or environments is not covered.**
   1. Conditions and environments outside of the given specifications, or use outdoors or in a place exposed to direct sunlight.
   2. Use for nuclear power, railways, aviation, space equipment, ships, vehicles, military application, equipment affecting human life, body, and property, fuel equipment, entertainment equipment, emergency shut-off circuits, press clutches, brake circuits, safety equipment, etc., and use for applications that do not conform to standard specifications such as catalogs and operation manuals.
   3. Use for interlock circuits, except for use with double interlock such as installing a mechanical protection function in case of failure. Please periodically inspect the product to confirm that the product is operating properly.

⚠ Caution

We develop, design, and manufacture our products to be used for automatic control equipment, and provide them for peaceful use in manufacturing industries.
Use in non-manufacturing industries is not covered.
Products we manufacture and sell cannot be used for the purpose of transactions or certification specified in the Measurement Act.
The new Measurement Act prohibits use of any unit other than SI units in Japan.

Limited warranty and Disclaimer/ Compliance Requirements

The product used is subject to the following "Limited warranty and Disclaimer" and "Compliance Requirements".
Read and accept them before using the product.

Limited warranty and Disclaimer

1. The warranty period of the product is 1 year in service or 1.5 years after the product is delivered, whichever is first.*2)
   Also, the product may have specified durability, running distance or replacement parts. Please consult your nearest sales branch.
2. For any failure or damage reported within the warranty period which is clearly our responsibility, a replacement product or necessary parts will be provided.
   This limited warranty applies only to our product independently, and not to any other damage incurred due to the failure of the product.
3. Prior to using SMC products, please read and understand the warranty terms and disclaimers noted in the specified catalog for the particular products.

*2) **Vacuum pads are excluded from this 1 year warranty.**
A vacuum pad is a consumable part, so it is warranted for a year after it is delivered.
Also, even within the warranty period, the wear of a product due to the use of the vacuum pad or failure due to the deterioration of rubber material are not covered by the limited warranty.

Compliance Requirements

1. The use of SMC products with production equipment for the manufacture of weapons of mass destruction (WMD) or any other weapon is strictly prohibited.
2. The exports of SMC products or technology from one country to another are governed by the relevant security laws and regulations of the countries involved in the transaction. Prior to the shipment of a SMC product to another country, assure that all local rules governing that export are known and followed.

Revision History

Edition B
* EQFS16H and EQY16H have been added.
* Errors in text have been corrected.
* The number of pages has been increased from 60 to 68.

⚠ Safety Instructions Be sure to read the "Handling Precautions for SMC Products" (M-E03-3) and "Operation Manual" before use.

SMC Corporation
Akihabara UDX 15F,
4-14-1, Sotokanda, Chiyoda-ku, Tokyo 101-0021, JAPAN
Phone: 03-5207-8249 Fax: 03-5298-5362
https://www.smcworld.com